EGRO

BUILT FOR EXCELLENCE

EZEROPCNMS v.211

SPARE PARTS CATALOGUE

en-US

EGRO ZERO PURE COFFEE (NMS)

EGRO ZERO

Index

1000 - Housing....4
Z1000_02 - Housing from S/N 12012650....6
Z1001_02 - Front Panel from S/N....8
2001 - Coffee Brewing Group....10
2002 - Bean Hopper-Grinders....14
2003 - Water Inlet System....16
2003_02 - Water Inlet System ZERO+....18
Z2000_02 - Coffee line from S/N 12010534....20
Z2002_02 - Bean Hopper-Grinders from S/N 12012650....22
Z3000_02 - Electric Part/Electronic Board from S/N 12010534....26
Z3001 - Electric Cable....28
5000 - Water spout/steam wand....30
Z5002_02 - steam boiler from S/N 12010534....32
Z5003 - Powder hopper....34
Z5004 - Powder system hydraulic....36
Alphanumeric index....38

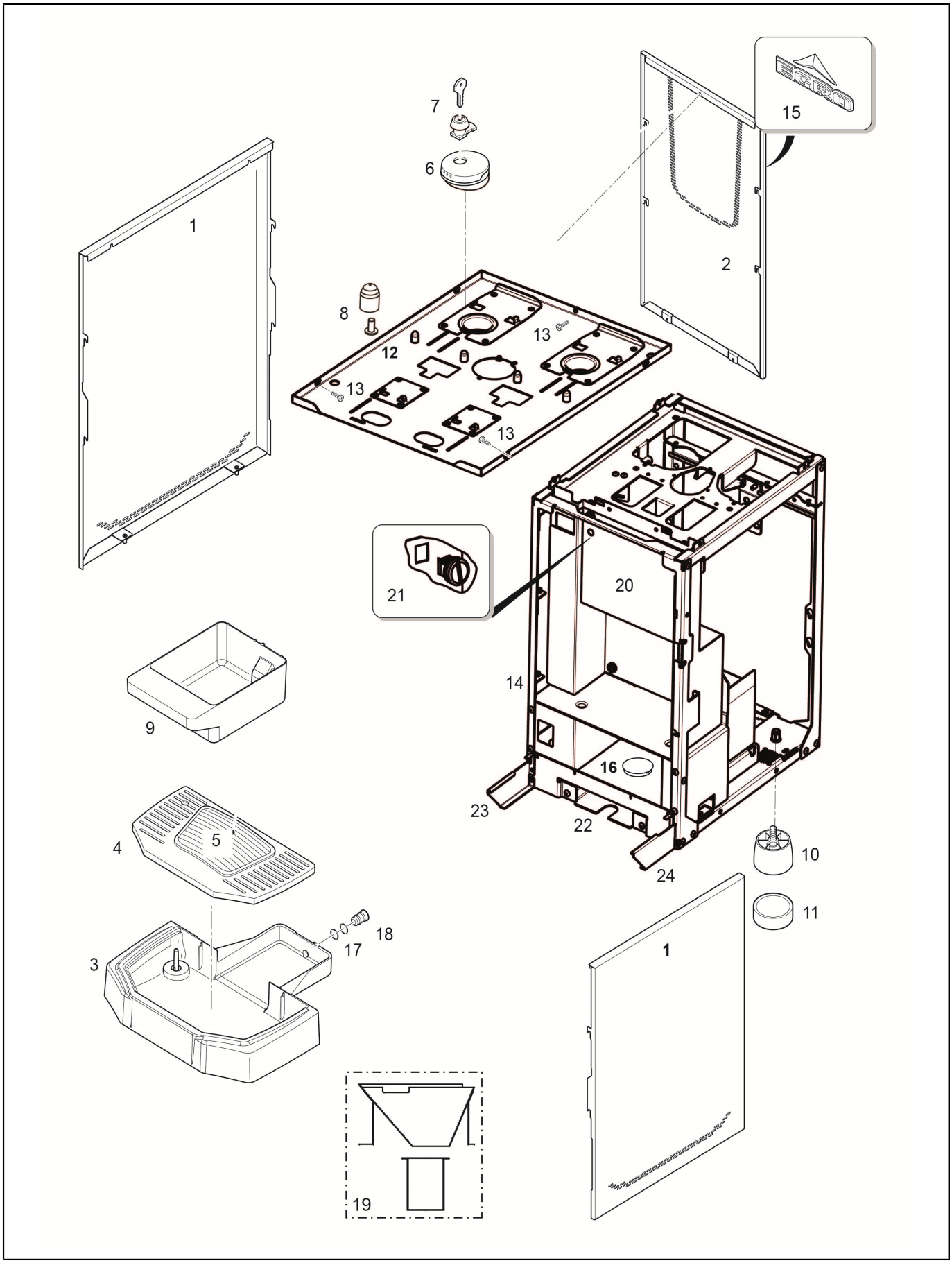
1
2
3
4
5
6
7
8
9
10
11
12
13
13
13
14
15
16
17
18
19
20
21
22
23
24
1

Pos.	Code	Description	Notes
1	32551162A	Side Panel Zero	
2	32551163A	Rear Panel Zero	
3	10705750	Retrofit Kit Drip Tray/16 Zero	
	34020129	Magnet 10 X 6	
4	10781312	Cup Tray Zero Self	
	32331489	Cup Tray Zero	
5	38120591	Cup Tray Grid Black	
6	10705698	Coffee Powder Inlet Assy.	
	10705708	Coffee Powder Inlet Self Assy	
7	10705529	Lock Assay. Ronis M15X17,5 With Hook 25.5Mm	
8	69000337	Lock 90 M15 X 17,5	
9	38120205	Coffee Waste Drawer Zero	
10	38123568	Machine Foot	
11	38123852	Riser For Machine Foot	
12	10700313	TOP LID 1 GRINDER	
	10700314	Top Lid 2 Grinder	
	10700315	TOP LID 1GRIDER+1POWDER	
	10700316	TOP LID 2 GRINDER+1POWDER	
	10700317	Top Lid 2Grinder+2Powder	
13	00046844	Screw M4 X 8 Mm	
14	10880306	Internal Door	
	32551190	Internal Door Zero No Tank	
15	45010209	Sticker Egro Logo Big	
16	38221020	Cap D. 88,9 Black	
17	36404059	O-Ring 14X1.78 Nbr70 Black 2056	
18	36990037	Drain Tray Cap Zero	
19	38120253	Waste Funnel Zero	
	38120254	Waste Extension	
20	23000306	Pivot Closing Lock Zero/14	
21	32551291	Internal Cover Zero/14	
22	38120212	Cover Drip Tray Zero	

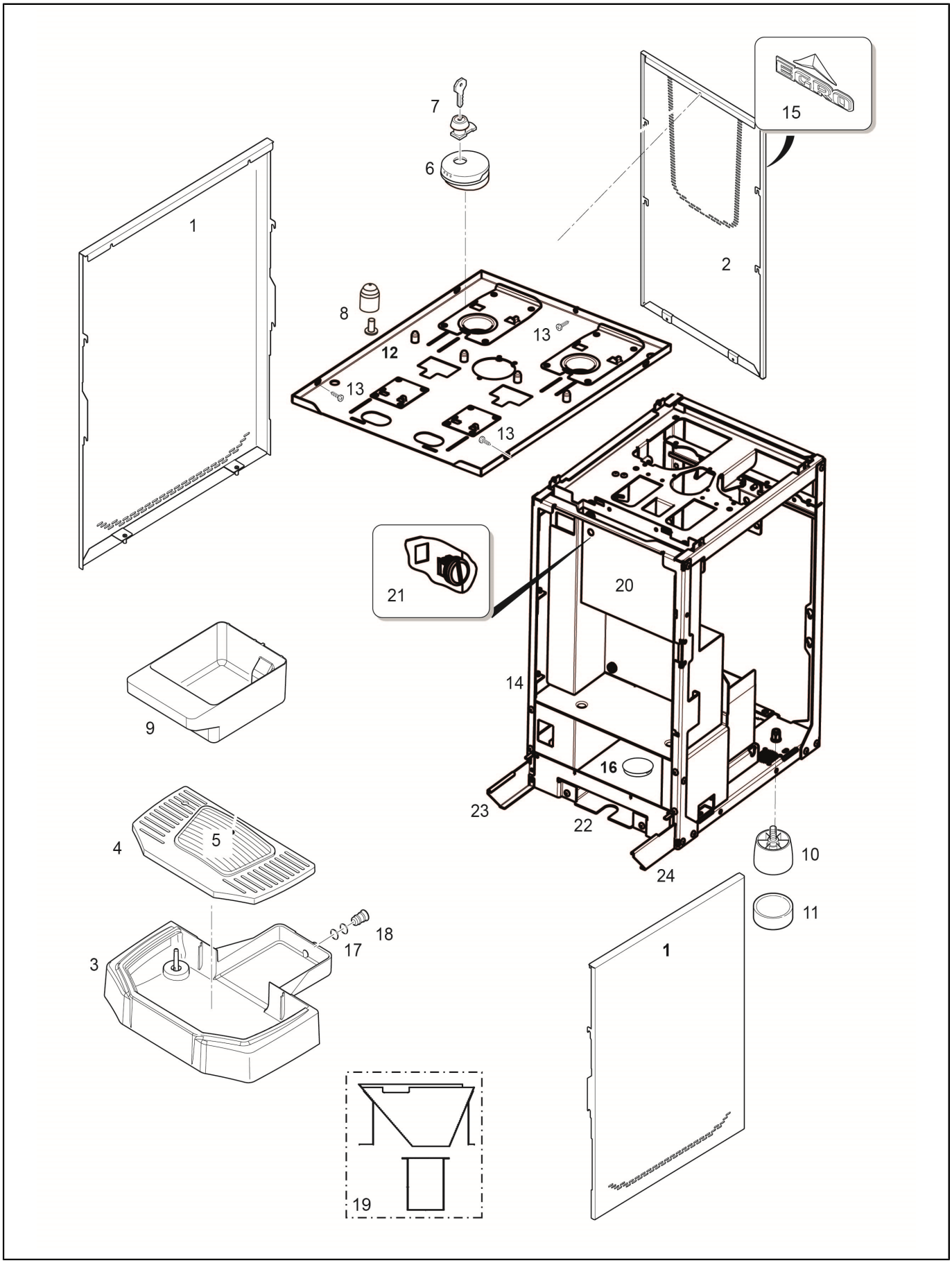
1
2
3
4
5
6
7
8
9
10
11
12
13
13
13
14
15
16
17
18
19
20
21
22
23
24
1

Pos.	Code	Description	Notes
1	32551162A	Side Panel Zero	
2	32551163A	Rear Panel Zero	
3	10705750	Retrofit Kit Drip Tray/16 Zero	
	34020129	Magnet 10 X 6	
	38120212	Cover Drip Tray Zero	
4	10781312	Cup Tray Zero Self	
	32331489	Cup Tray Zero	
5	38120591	Cup Tray Grid Black	
6	10705698	Coffee Powder Inlet Assy.	
	37113507	Screw Atf 3 X 6 Tcb	
7	10705529	Lock Assay. Ronis M15X17,5 With Hook 25.5Mm	
	69000337	Lock 90 M15 X 17,5	
8	00001074	Crossed Raised Cheese Head Screw M4 X 10 Mm	
	36930113		
9	38120205	Coffee Waste Drawer Zero	
10	38123568	Machine Foot	
11	38123852	Riser For Machine Foot	
12	10701130	Top Lid 1Grinder Zero/14	
	10701131	Top Lid 2 Grinder Zero/14	
	10701132	Top Lid 1Grinder+1Powder Zero/14	
	10701133	Top Lid 1Grinder+2Powder Zero/14	
	10701134	Top Lid 2 Grinder+1Powder Zero/14	
	10701135	Top Lid 2Grinder+2Powder Zero/14	
	10701347	Bean Hopper Zero/16 Assy	
13	00046844	Screw M4 X 8 Mm	
15	45010209	Sticker Egro Logo Big	
16	38221020	Cap D. 88,9 Black	
17	36404059	O-Ring 14X1.78 Nbr70 Black 2056	
18	36990037	Drain Tray Cap Zero	old version / alte Version
19	38120253	Waste Funnel Zero	
	38120254	Waste Extension	
20	23000306	Pivot Closing Lock Zero/14	
	32551290	Internal Cover Powder Zero/14	
	32551291	Internal Cover Zero/14	
21	34200103	Plastic Closing Screw	
22	38120212	Cover Drip Tray Zero	
23	32332147		
24	32332146		

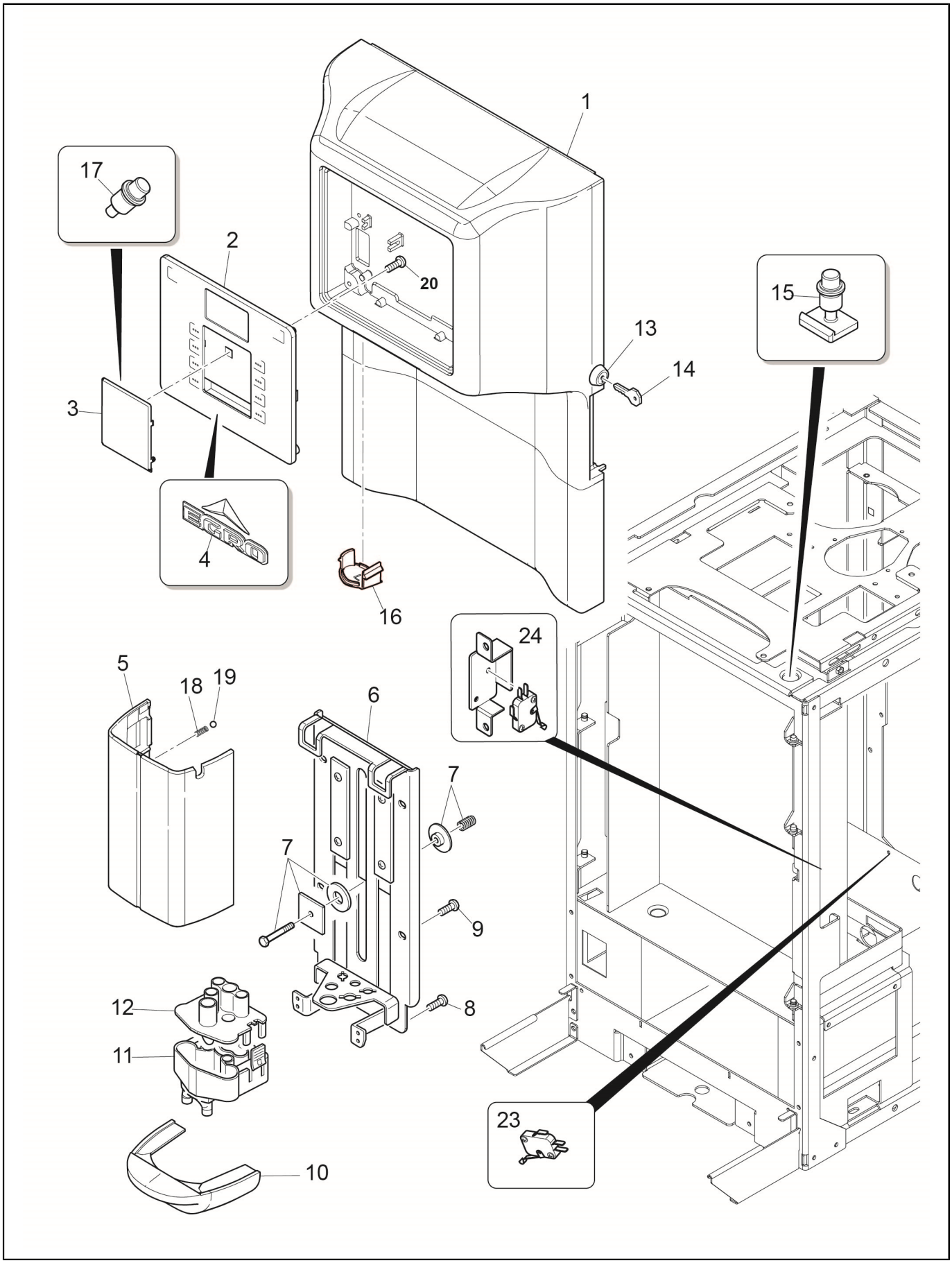
1
2
3
4
5
6
7
7
8
9
10
11
12
13
14
15
16
17
18
19
20
23
24

Pos.	Code	Description	Notes
1	38120193	Front Panel Zero	
2	10705690	Capacitive Keypad Zero	
3	10701035	Push Button Product List Zero	
4	45010208	Sticker Egro Logo Small	
5	10905151	Cover Coffee Outlet Egro Zero	
6	10700352	Coffee Outlet Assy. Egro Nms	
	10701142	Qm Nms Outlet Slider One/Zero Assy.	
7	00001517	6-Edge Nut Self Locking M4	
	00017719	Washer M4 Inox	
	00044683	Spacer Pom	
	00055483	Spring	
	32331776	Coffee Oulet Bracket	
	32331779	Coffee Oulet Spring Bracket	
	38120182	Spring Bush Powder Module Outlet	
	38120183	Powder Module Outlet Spacer 22 X 13 X 13,5	
8	00030511	Screw	
9	00045649	Countersunk Cross-R.Screw M4 X 12 Mm	
10	38120211	Handle Brewing Outlet	
11	38120209	Lower Spout Nms D5.5	with coffee outlet 5mm-> OPTIMIZED FOR ESPRESSO
	38120277	Coffee Outlet Lower Part D.6,3	with coffee outlet 6.3mm -> optimized also for long fast brewings SINCE SERIAL NUMBER 12012462 PIN 120059 all machines are equipped with 38120277
12	38120210	Upper Spout Nms	
13	32551187	CLOSING PANEL ZERO	
14	10705529	Lock Assay. Ronis M15X17,5 With Hook 25.5Mm	
15	10700309	Front Panel Button Assy.	
16	38120213	Wand Cap Zero	
17	23000223	Buttons Slider Label Shaft	
	36930018	Button For Product Label	
18	39110062	At Ball Spring	
19	37900115	Ball 1/4 100	
23	00001065	Raised Cheese Head Screw M3 X 16 Mm	
	00001514	6-Edge Nut Self Locking M3	
	32551173	Micro Bracket Coffee Waste Zero	
	34100021	Micro Switch	
	37040410	Screw M 4 X 10	
24	32551116	Bracket For Panel Micro Sensor	
	34100021	Micro Switch	
	37030310	Screw M3X12	

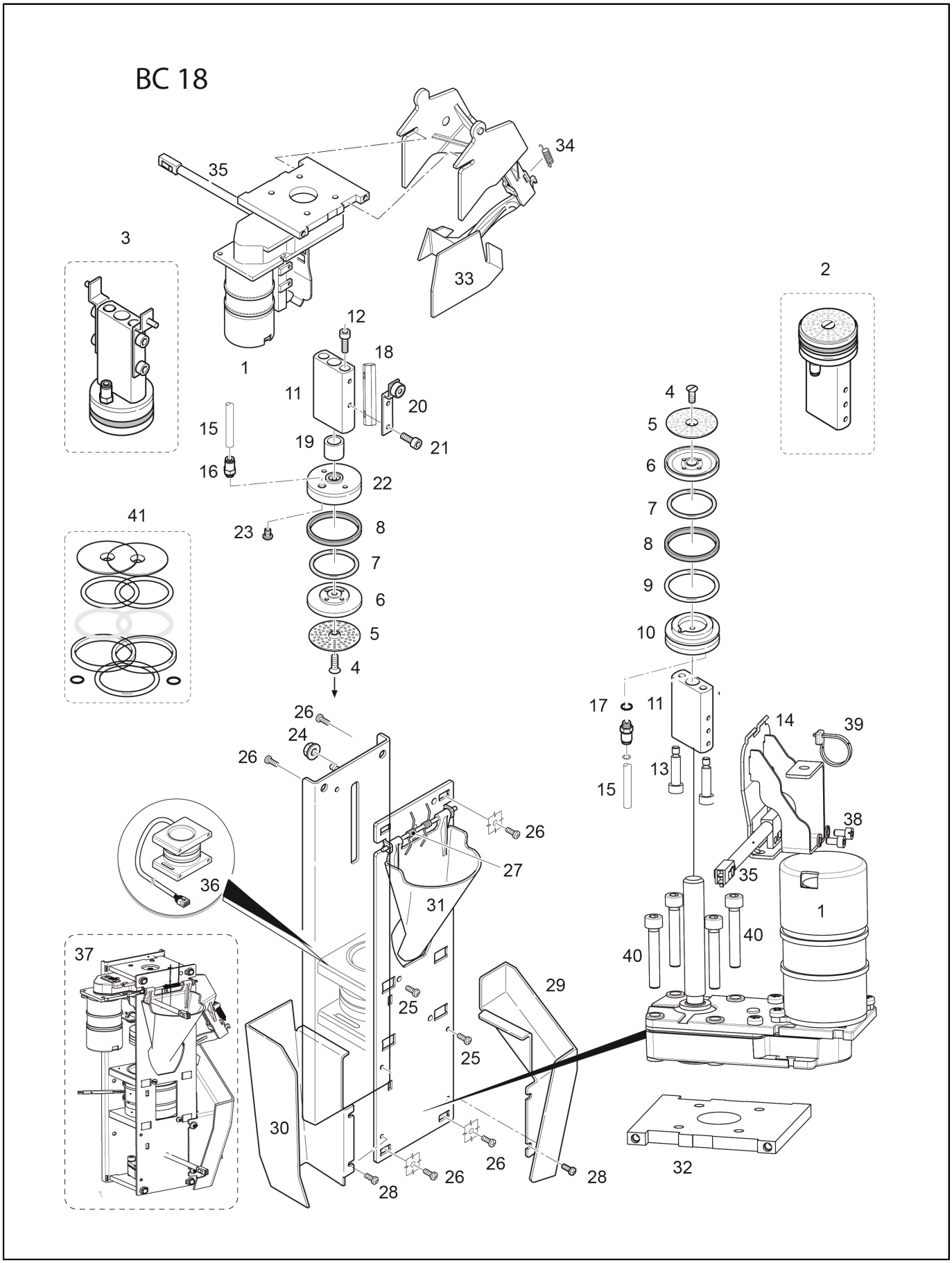
BC 18
35
34
3
33
2
12
18
1
11
20
4
5
15
19
21
6
16
22
7
41
23
8
8
7
9
6
10
5
4
17
11
26
14
39
24
26
13
15
38
26
27
35
36
31
1
40
40
37
29
25
25
30
26
26
28
28
32

Pos.	Code	Description	Notes
1	10701051	Spindle Motor With Sensor	for Egro ONE: S/N 12009467 PIN 108293
2	10700177	Lower Piston Bc18	
3	10700176	Upper Piston Bc18	
4	00001176	Countersunk Screw M4X12 Mm	
5	00060116	Brewing Sieve D. 44 Mm	
6	00054861	Filter Carrier	
7	00100136.001	O-Ring 31,35 X 3,53 Silicone 70Sh Red	
8	00039064	Turcon Ring 39 X 44 X 4	
9	00100506.001	O-Ring 36,09 X 3,53 Silicone 70Sh	
10	36930110	Lower Piston Gr. Bc18	
11	10701050	Piston Shaft With Magnet	piston shaft for BC18, ATTENTION to the magnet position. (could be used also on L61 or previous groups, put the magnet on the opposite side) albero pistone per BC18, ATTENZIONE alla posizione del magnete. (può essere utilizzato su gruppi L61 o precedenti posizionando al contrario il magnete)
12	00000930	Hex Socket Head Screw M5 X 25 Mm	
13	00048548	Hex Socket Head Screw For Peek Pistonm4 X 15 Mm	
14	32331498	Piston Guide Reed	
15	38228072	Teflon Hose Fep D. 4,0 X 2,5	
16	69200133	Straight Connector D.4 X M5	
17	00060283	O-Ring 4 X 1,2 F	
18	00045032	Nut	
19	30001048	Spacer Piston Guide	
20	32331443	Bracket Upper Piston	
21	00000928	Hex Socket Head Screw M4 X10 Mm	
22	36930111	Upper Piston Group Bc18	
23	00048550	Flow Limiter D. 0.7	
24	00001521	Keps Nut M5	
25	37155011	Screw Atf Pt 4X10 Tcb Ph Inox	
26	37040409	Screw M4 X 8 Te	
27	00060858	Transmission Assay.	
28	00046844	Screw M4 X 8 Mm	
29	38120120	Spindle Motor Protection	
30	00048747 38120119	Grounds Slide Grounds Slider	Fit for all generation brewing unit (L61/ BC18)/ passt für alle Generationen von Brühgruppen (L61/BC18) does not fit for Automatic spout - use metal version 00048747 / passt nicht für Automatischen Auslauf - Metall Ausführung verwenden 00048747
31	38120115	Coffee Powder Funnel	
32	24300010	Spindle Motor Plate	
33	10700178	Ejector Brewing Group	
34	39110026	Spring Ejector	
35	34020125	End Switch Spindle Motor	
36	10701036	Brewing Chamber Bc18	
37	10054002	Brewing Group Bc18	
38	37060306 37420300	Screw M3 X 6 Tcei Elastic Washer 3 X 0,8	
39	34200071	Fixing Cable Clamp	
40	00000935	Hex Socket Head Screw M5 X 30 Mm	

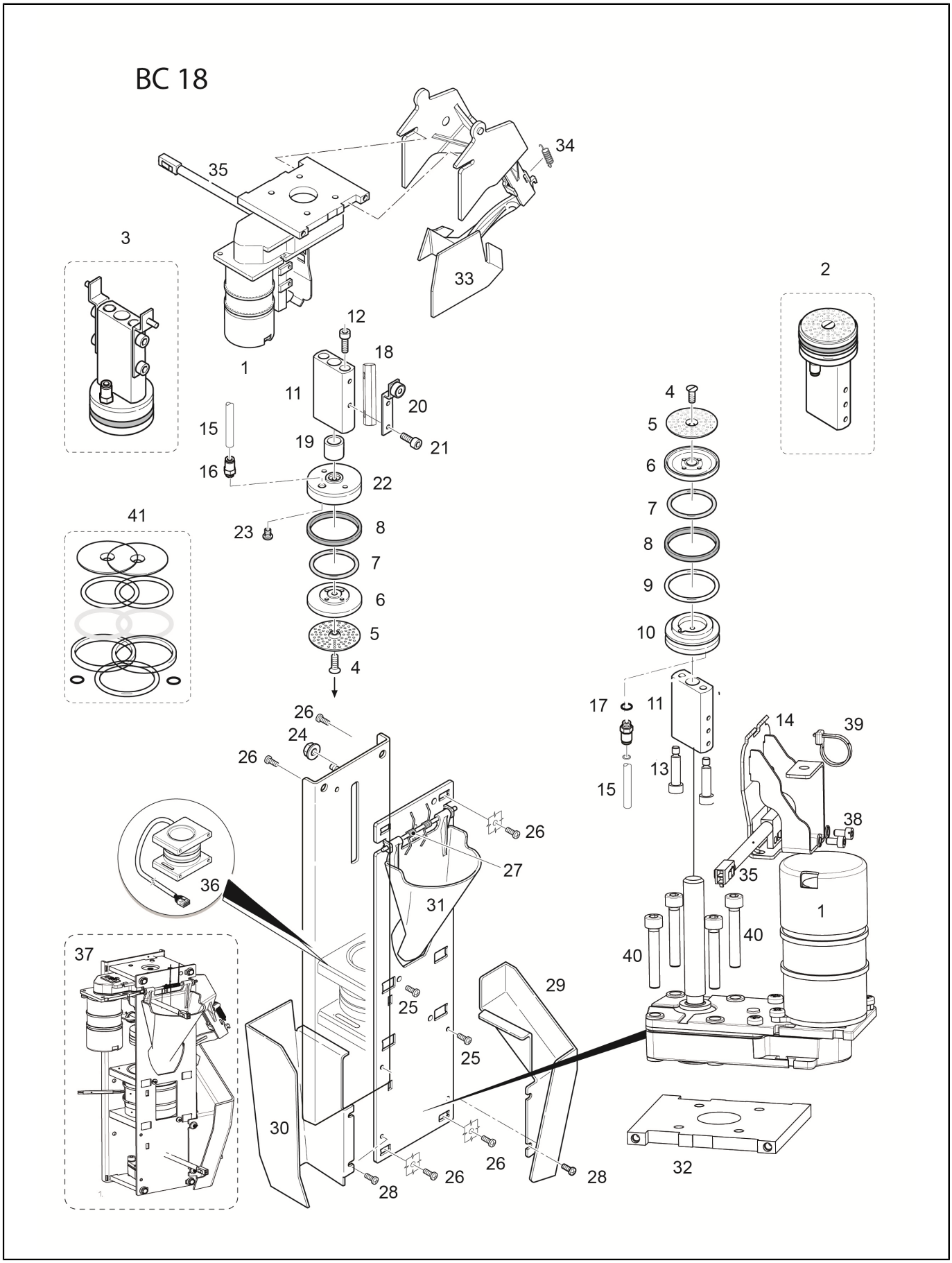
BC 18
35
34
3
33
2
12
18
1
11
20
4
5
15
19
21
6
16
22
7
41
23
8
8
7
9
6
10
5
4
17
11
26
14
39
24
26
13
15
38
26
27
35
36
31
1
40
40
37
29
25
25
30
26
26
28
28
32

Pos.	Code	Description	Notes
	37040409	Screw M4 X 8 Te	
41	00057446	Gasket Kit Brewing Group Bc18	

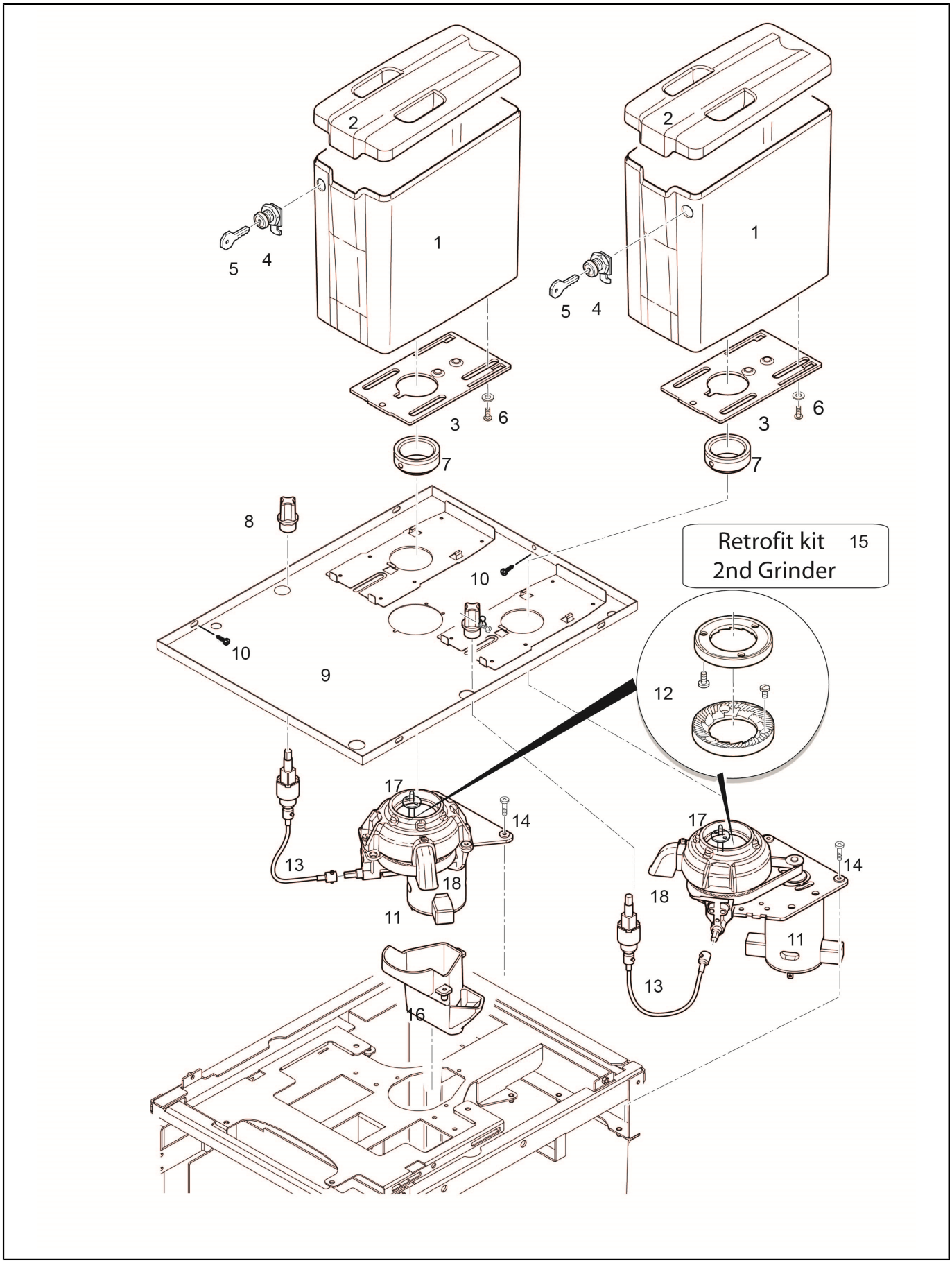
2
1
5
4
3
6
7
8
10
9
Retrofit kit 15
2nd Grinder
12
17
14
13
18
11
16

Pos.	Code	Description	Notes
1	10701347	Bean Hopper Zero/16 Assy	
2	38120192	Lid For Bean Hopper Zero	
3	32331910	Closing Slider Hopper Zero/14	
4	10705529	Lock Assay. Ronis M15X17,5 With Hook 25.5Mm	
5	69000337	Lock 90 M15 X 17,5	
6	37113508	Selfscrew M3X8	
	37410300	Plane Washer D3.2X9	
7	36990034	Bean Inlet Rubber Zero	
8	38120217	Handle Grinder Regulation	
9	10700313	TOP LID 1 GRINDER	
	10700314	Top Lid 2 Grinder	
10	00046844	Screw M4 X 8 Mm	
11	10700305	Grinder Right 230V	
	10700306	Grinder Left 230V	
	10700307	Grinder Right 110V	
	10700308	Grinder Left 110V	
12	69140036	Grinder Burrs Zero	
13	39920017	Elastic Movement Grinder Regulation Zero	
14	00001065	Raised Cheese Head Screw M3 X 16 Mm	
15	10701037	RETROFIT KIT 2ND GRINDER 230V ZERO	
	10701038	RETROFIT KIT 2ND GRINDER 110V ZERO	
16	10705755	Retrofit Kit Coffee Funnel	
17	69140039	Gear Wheel With Belt	
18	10705755	Retrofit Kit Coffee Funnel	

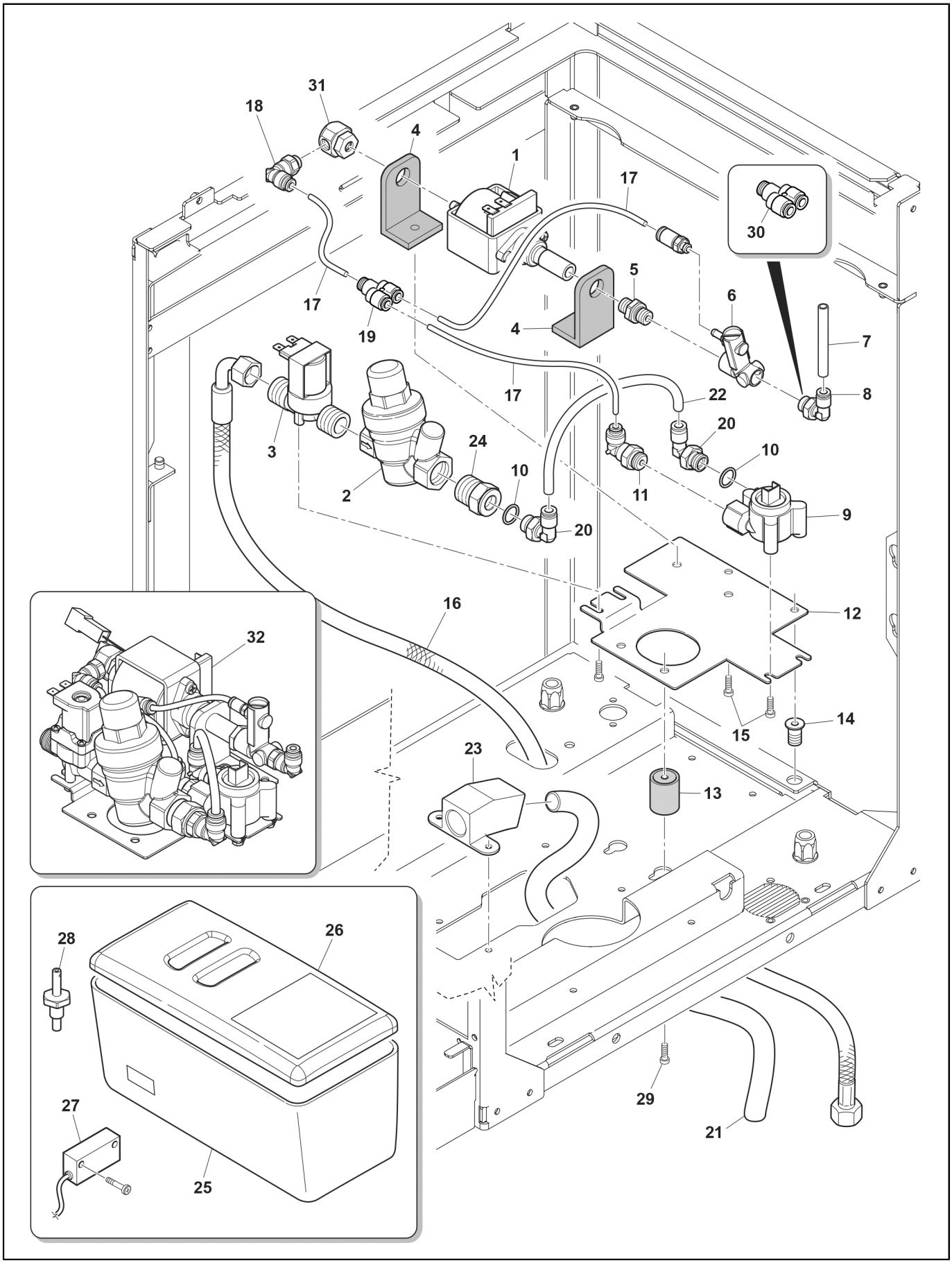
31
18
4
1
17
30
5
6
17
19
4
7
17
22
8
20
3
24
10
10
2
11
9
20
16
12
32
14
15
23
13
28
26
27
25
29
21

Pos.	Code	Description	Notes
1	34011023	Pump 120V 60Hz	
	34011026	Pump 220-230V 50Hz	
	34011029	Pump 220-230V 60Hz	
	34200044	Thermal 2Mmt 120ï¿½	
2	69200069	Pressure Adjuster 0,8 Bar Zero	pre-set 1,5 bar net connection only voreingestellt auf 1,5 bar (nur bei Festwasser vorhanden)
3	34040125	Valve Inlet 2/2 24V	net connection only
4	36990056	Anti-Vibrating Device Ulka	
5	23000378	Connector M1/8-M12	
6	69200095	Bypass Inlet Valve Zero	
	69200133	Straight Connector D.4 X M5	
7	38228072	Teflon Hose Fep D. 4,0 X 2,5	
8	69200139	Elbow Connector 4 X G1/8 Ppsu	
9	00044824	Connector 3 Poles	
	00045715	Flowmeter	net connection
	34070053	Flowmeter Low Pression 1,5	tank version
10	00044464	Gasket 16,5 X 13,2 X 1,5 Copper	net connection
11	69200142	Elbow Connector G1/4X4 Ppsu	
12	32551169	Pressure Adjuster Bracket	
13	36990057	Anti-Vibrating Device 20 X 25 Ff	
14	36322005	Threaded Insert M5X17	
15	37030509	Screw M5 X 10 Tcb Ph Inox	
16	00100248.002	Reinforced Hose G 3/8 X 1500Mml = 150 Mm	net connection only
17	38228072	Teflon Hose Fep D. 4,0 X 2,5	
18	69200139	Elbow Connector 4 X G1/8 Ppsu	
19	69200187	Y Connector D.4 Ppsu	
20	69200154	Elbow Connector 6 X G1/4 X 1,78 Ppsu	net connection
21	36901804	Drain Pipe 14 X 1500	
22	38228073	Teflon Hose Fep D. 6 X 4	
23	10705750	Retrofit Kit Drip Tray/16 Zero	
24	23000377		net connection only
25	10700320	Tank Assy.	tank version
	36901957	Gasket Tank Zero	tank version
	38120223	Water Tank Connection Zero	tank version
	38120224	Water Tank Valve Zero	tank version
	39110085	Rubber Tank Spring Egro Zero	tank version
	69111016	Cartridge Filter M Zero Tank	tank version
	69111017	Adapter For Filter M To Cartridge G Zero Tank	tank version
26	10700353	Tank Cover Assy. Zero	tank version
27	34020128	Level Sensor Tank Zero	tank version
28	23000094	Nut M10X1 Fix	
	23000242	Tank Connection	tank version
29	37030509	Screw M5 X 10 Tcb Ph Inox	
30	69200187	Y Connector D.4 Ppsu	NMS version only
31	69200175	Fast Connector Pump Zero	
32	10700321	Water Inlet Assy. 110V Zero	only with FEP pipes
	10700322	Water Inlet Assy. 230V Zero	only with FEP pipes solo con tubi FEP
	10700325	Water Tank Inlet 230V Zero	
	10700356	WATER INLET 220V 60HZ ZERO ASSY.	only with FEP pipes
	10701151	Retrofit Kit Inlet System Fep Zero	

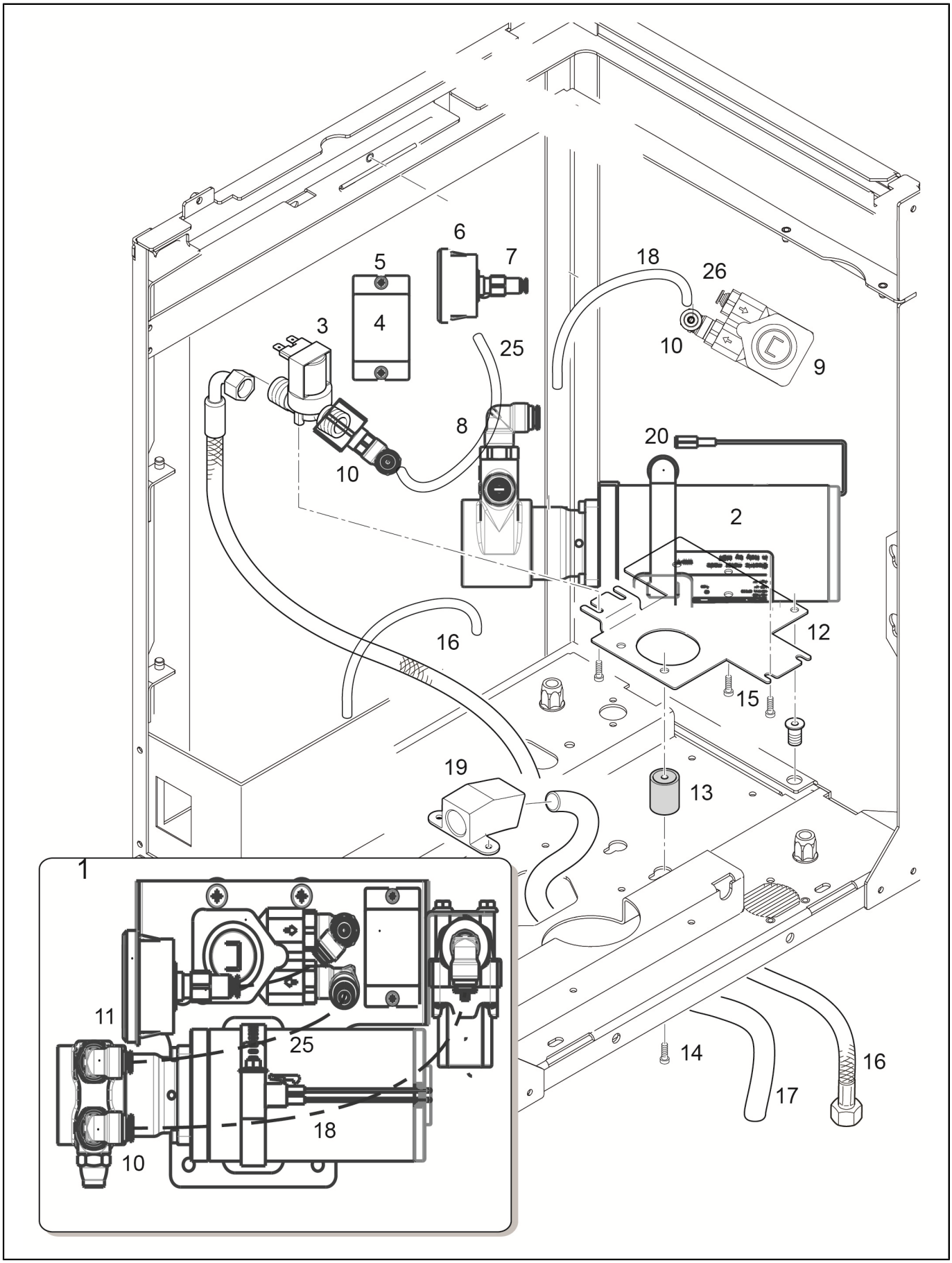
6
5
7
18
26
3
4
25
10
9
8
20
10
2
16
12
15
19
13
1
11
25
14
16
17
18
10

Pos.	Code	Description	Notes
1	10701467	Water Inlet 24V	
	10701468		
2	34011041	Pump Zero Plus 24V	
3	10700376	Water Inlet	
4	34200338	Power Relay 240V	
	34200339	Power Relay 12V	
5	00001062	Raised Cheese Head Screw M3 X 6 Mm	
6	35002512	Manometer Boiler Mc/15	
7	00002197	O-Ring 5,28 X 1,78 Nbr 70Sh	
	69200167	Straight Connector 4Xg1/8	
8	69200166	T Connector D.4 Ppsu	
9	00045715	Flowmeter	
	32551377		
	37040410	Screw M 4 X 10	
10	69200154	Elbow Connector 6 X G1/4 X 1,78 Ppsu	
11	69200155	Elbow Connector 4 X G1/4 X 1,78 Ppsu	
12	32551387		
	37040506	Screw M5X6 Te Inox	
	37430500	Toothed Washer D. 5	
13	36990057	Anti-Vibrating Device 20 X 25 Ff	
14	37030509	Screw M5 X 10 Tcb Ph Inox	
15	34200338	Power Relay 240V	
16	00100248.002	Reinforced Hose G 3/8 X 1500Mml = 150 Mm	
17	36901804	Drain Pipe 14 X 1500	
18	38228073	Teflon Hose Fep D. 6 X 4	
19	10705750	Retrofit Kit Drip Tray/16 Zero	
20	34150052		
25	38228072	Teflon Hose Fep D. 4,0 X 2,5	
26	69200168	Straight Connector 4Xg1/4	

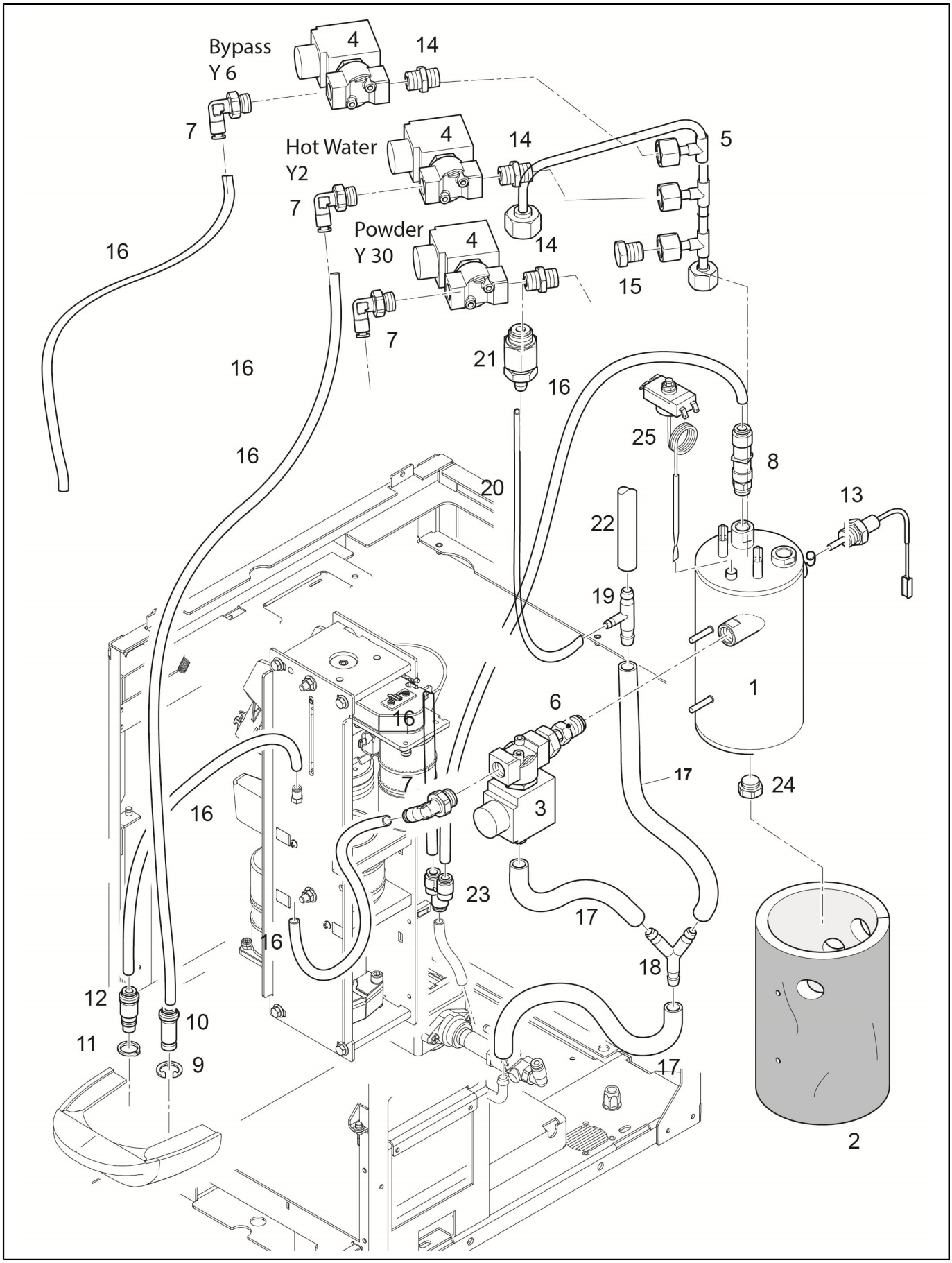
Bypass
Y 6
Hot Water
Y2
Powder
Y 30
4
14
5
7
16
15
21
25
8
13
20
22
9
19
1
6
17
24
3
23
18
12
10
11
2

Pos.	Code	Description	Notes
1	10020025	Kit Coffee Boiler 230V 1800W Dhe Egro Zero	
	10020026	Kit Boiler Coffee 110V 1400W Zero Dhe	
	10020035	Boiler 110V 1400W Coffee/Steam Incoloy 800	
	10020037	Boiler 230V 1800W Coffee Incoloy 800	
2	69000415	Boiler Insulation	
3	00100147.001	Operator Kit 3/2 Way Water T30 (Acl)	only for Sirai valve cod.34040167
	00100149.001	Plunger 3/2 Water T30 (Acl)	valid for 34040167 Sirai Valve
	10060607	Electrovalve Coffee Boiler	
	27350014	Copper Gasket 12.5X9.8X1.5	
	34040178	Plunger 3/2 T30 (Sirai) Ml316	only for ACL valve cod. 34040045
	34040181	Operator Kit 3/2 Ways T30 24V Sirai	
	34040184	Valve 3/2 24V T30 (Sirai)	
4	00100013.001	O-Ring 17,17 X 1,78 F	
	00100558.001	Valve 2/2 Water T30 (Acl)	
	00100560.001	Plunger 2/2 Water T30 (Acl)	only for ACL valve T30 2/2 cod 00100558.001
	34040177	Plunger 2/2 T30 (Sirai) Ml316	only for Sirai Valve cod. 34040162
	34040180	Operator Kit 2/2 Ways T30 24V Sirai	only for Sirai valve T30 2/2 cod. 34040162
	34040183	Valve 2/2 24V T30 (Sirai)	
5	10046062	Pipe Expansion Valve+Boiler Coffee	
	10046063	Pipe Bypass+Press. Relief Zero	
6	10042199	Pipe Valve-Boiler Coffee Zero	
7	38120127	Restriction Ring Little White	
	69200142	Elbow Connector G1/4X4 Ppsu	
8	00054064	Threaded Male Nipple (Usa)	
	00054067	Check Valve D. G 1/8	
	27350014	Copper Gasket 12.5X9.8X1.5	
	69200139	Elbow Connector 4 X G1/8 Ppsu	
	69200173	Check Valve 4 X G1/8	replacement for .. / Ersatz für 69200143
9	37521001	Snap Ring D. 10	
10	00100043.001	O-Ring 6,75 X 1,78 Mvq	
	10701019	Central Injector/14	
11	00100186.013	Snap Ring D. 13 Inox	
12	00100038.001	O-Ring 8,73 X 1,78 Mvq	
	10701020	Coffee Injector	
13	10701642	Temperature Sensor With O-Ring	
14	23000274	Connector M1/4 X M1/4 Gas	
15	00044464	Gasket 16,5 X 13,2 X 1,5 Copper	
	23000289	Closing Pin G1/4	
16	34209126	Sheat 6X350	
	38228072	Teflon Hose Fep D. 4,0 X 2,5	
17	00004473	Silicon Hose D. 14 X 9 Mm	
	10701048	Drain Pipe Kit	
18	00046806	Y Unit D. 12 Mm	
19	00045714	Reducing T Connector D. 12 - 6 - 12 Mm	
20	00004474	Silicon Hose D. 8 X 5 Mm	
21	10060009	Gasket Holder With Viton Gasket	
	10060479	Expansion Valve 8 X G 3/8	
22	00052557	Silicon Hose D. 18 X 12 Mm	
23	00054344	Y-Connection D. 4 Mm	
24	23000309	Plug With Ogive 1/8	
25	34200322	High Limit Thermostat 140/15 110V Ul	110v
	34200323	High Limit Thermostat 140/15 220V	230v

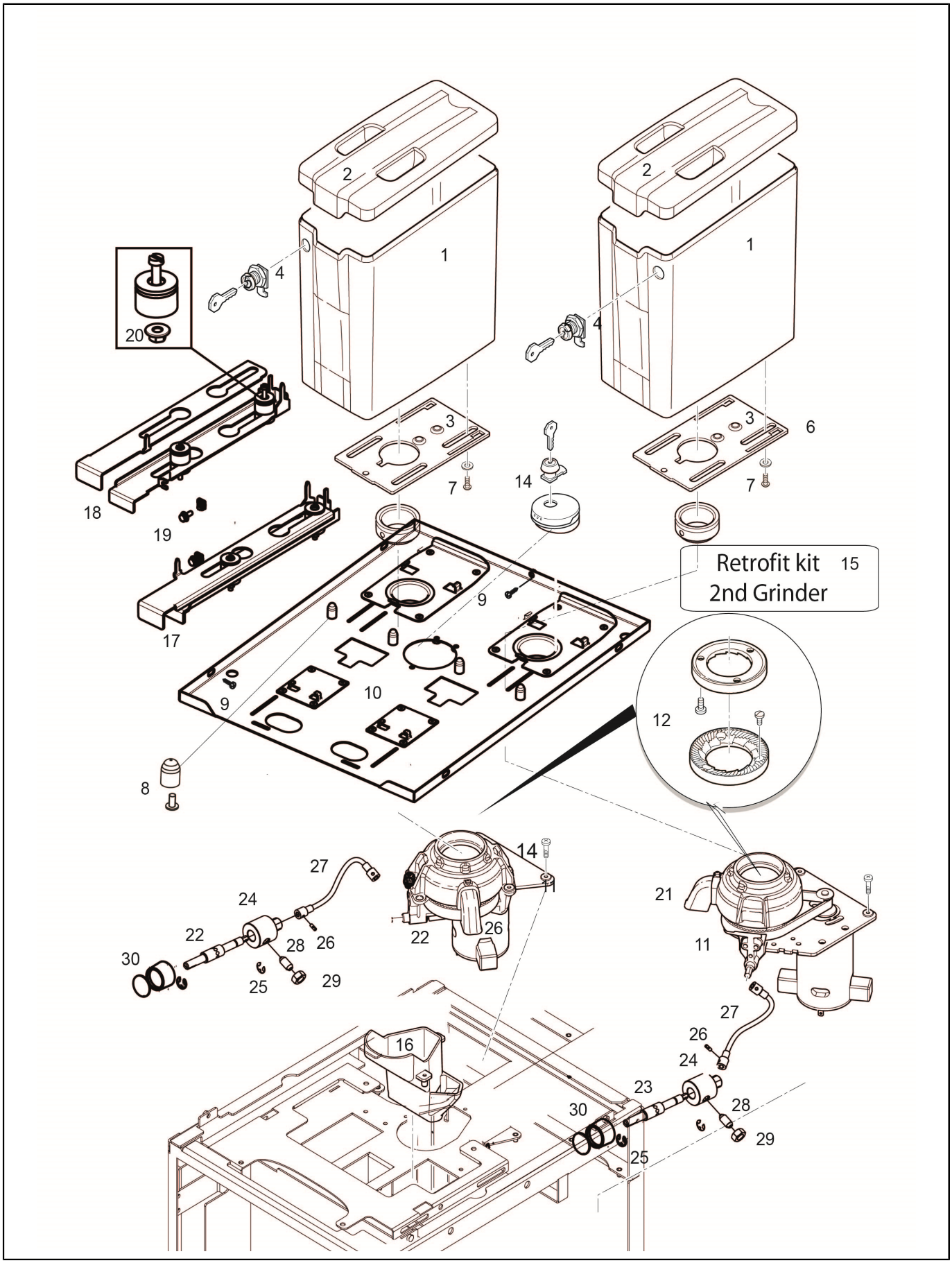
Retrofit kit
2nd Grinder
15
1
2
3
4
6
7
8
9
10
11
12
14
16
17
18
19
20
21
22
23
24
25
26
27
28
29
30

Pos.	Code	Description	Notes
1	10701290	Bean Hopper Zero Left Self Assy.	
	10701291	Bean Hopper Zero Assy. Right 2Gr Self	
	10701347	Bean Hopper Zero/16 Assy	
2	38120192	Lid For Bean Hopper Zero	
3	32331910	Closing Slider Hopper Zero/14	
4	10705529	Lock Assay. Ronis M15X17,5 With Hook 25.5Mm	
	69000337	Lock 90 M15 X 17,5	
6	37155002	Screw Pt 3,5X12 Tcb Ph Inox	
	37410310	Plane Washer 3,5/11X0,8	
7	36990034	Bean Inlet Rubber Zero	
8	00001074	Crossed Raised Cheese Head Screw M4 X 10 Mm	
	36930113		
9	00046844	Screw M4 X 8 Mm	
10	10701130	Top Lid 1Grinder Zero/14	
	10701131	Top Lid 2 Grinder Zero/14	
	10701132	Top Lid 1Grinder+1Powder Zero/14	
	10701133	Top Lid 1Grinder+2Powder Zero/14	
	10701134	Top Lid 2 Grinder+1Powder Zero/14	
	10701135	Top Lid 2Grinder+2Powder Zero/14	
11	10700305	Grinder Right 230V	
	10700307	Grinder Right 110V	
	69140039	Gear Wheel With Belt	
12	69140036	Grinder Burrs Zero	
	69140045	Stir Moving Beans Zero	
14	10700306	Grinder Left 230V	
	10700308	Grinder Left 110V	
	10705529	Lock Assay. Ronis M15X17,5 With Hook 25.5Mm	
	10705698	Coffee Powder Inlet Assy.	
	37113507	Screw Atf 3 X 6 Tcb	
	69140039	Gear Wheel With Belt	
16	10705755	Retrofit Kit Coffee Funnel	only compatible with grinder outlet 69140040 / nur kompatibel mit Mühlenausgang 69140040
	10705755	Retrofit Kit Coffee Funnel	
17	32331907	Powder Hopper Slider Coffee Left Zero/14	
	32331908	Powder Hopper Slider Coffee Right Zero/14	
18	32331905	Bean Hopper Slider Coffee Left Zero/14	
	32331906	Bean Hopper Slider Coffee Right Zero/14	
19	37040410	Screw M 4 X 10	
	37320604	Nut M4 Cage Inox	
20	36930112	Slider Guide Zero/14	
	37030435	Screw M 4 X 35	
21	10705755	Retrofit Kit Coffee Funnel	
	10705755	Retrofit Kit Coffee Funnel	only compatiblewith new coffee collector 38120332 / nur kompatibel mit neuem Kaffee Sammler 38120332
22	23000352		
23	23000351		
24	36930116		
25	37510600	Snap Ring D. 6	
26	37620308	Elastic Pin 3x8	
27	39920019	Elastic Movement Grinder Regulator Zero/16	
28	69200156		
29	00001472	Hex Nut M8 X 0,8 Mm	

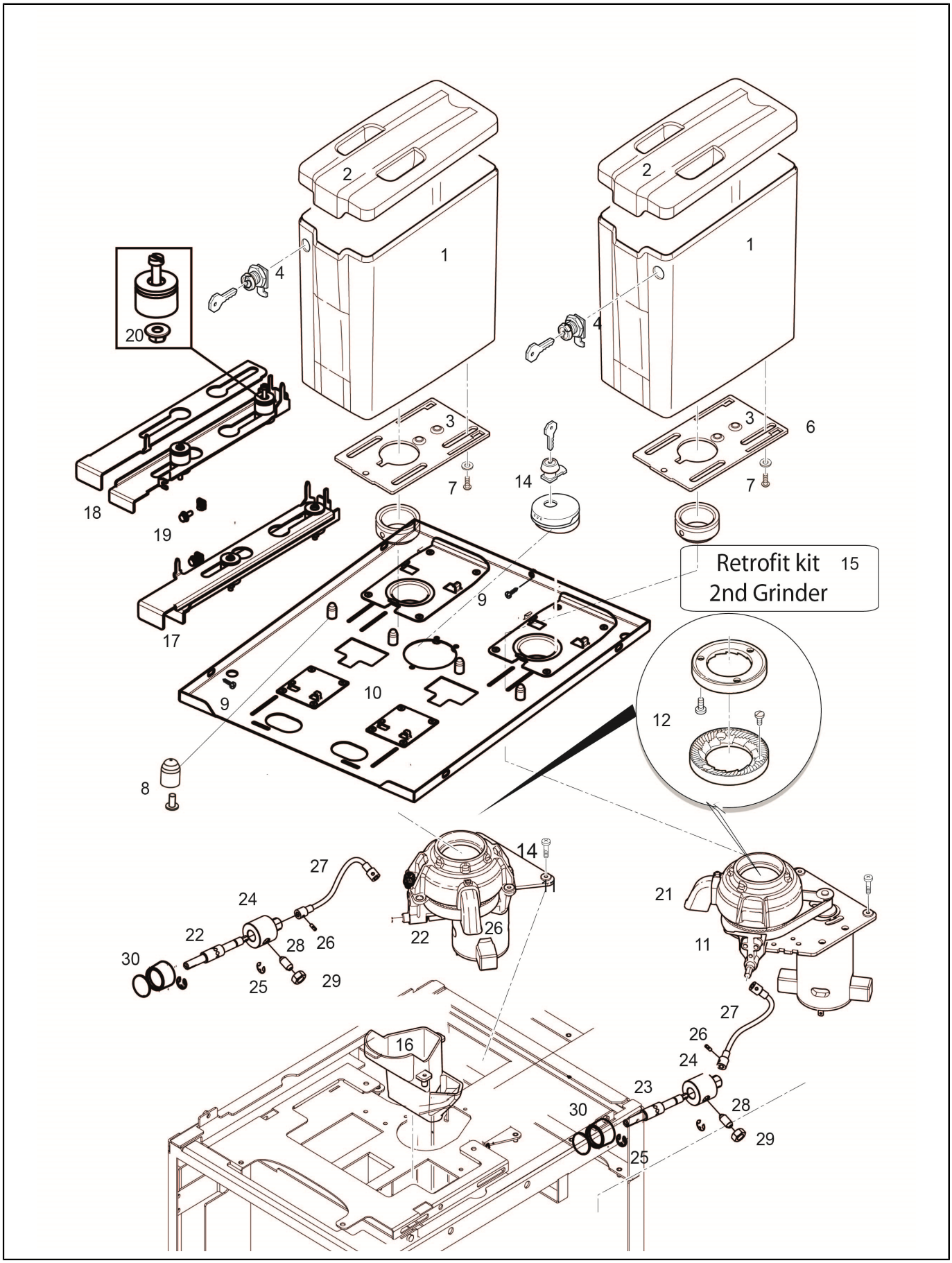
2
1
4
20
3
7
14
6
18
19
17
9
10
8
Retrofit kit 15
2nd Grinder
12
27
24
22
28
26
30
25
29
21
11
16
23

Pos.	Code	Description	Notes
	10701340	Grinder Regulation Left Zero/16	
	10701341	Grinder Regulation Right Zero/16	
30	38123087	Gas Tap Z11	

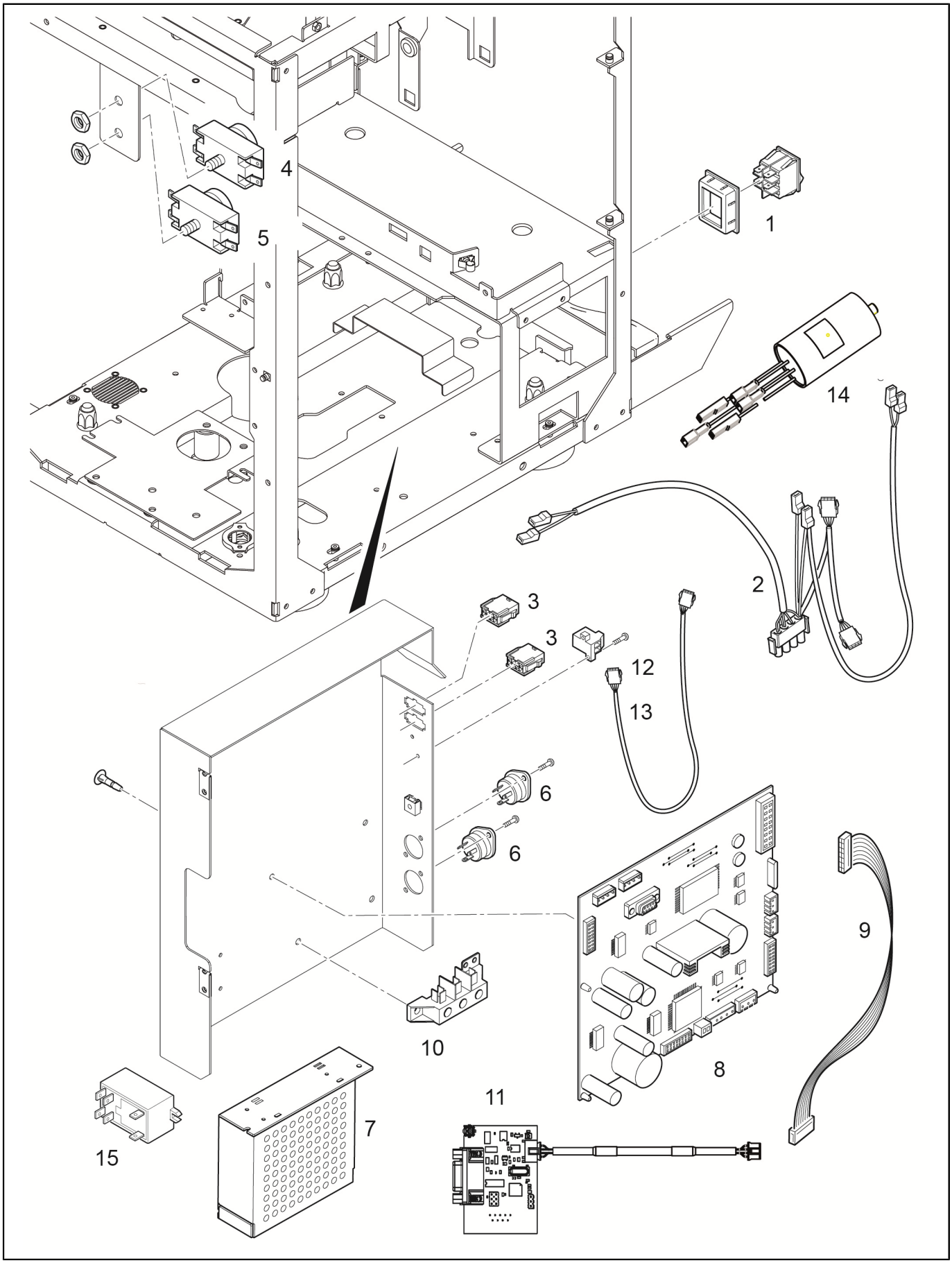
4
5
1
14
2
3
3
12
13
6
6
9
10
8
11
7
15

Z3000_02 - Electric Part/Electronic Board from S/N 12010534

Pos.	Code	Description	Notes
1	34030079	Switch Black 0-1	
	38120207	Switch Bracket Zero	
2	10110771	Wiring Motor Cpu Powder Module	
	10110845	Steam Power Cable 230V Egro Zero Dhe	
	10110846	Power Cable 230V Egro Zero Dhe	
3	10110775		
4	34200322	High Limit Thermostat 140/15 110V Ul	
	34200323	High Limit Thermostat 140/15 220V	
5	34200354	High Limit Thermostat 165/15 110V Ul	
	34200355	High Limit Thermostat 165/15 220V	
6	10701053	Kit Triac Zero	
	34150023	Clamp 3 Pol.	
7	10110774	Wiring Switching Zero	
	34070300	Power Supply 24V 150W	only for Zero Plus
	34070314	Power Supply 24V 100W	only for Zero and Zero NMS
8	10701052	Control Board Zero	
9	10110789	Keyboard Wiring	
10	34150023	Clamp 3 Pol.	
11	34070280	Oriental Language Board Zero	
12	10110820	Wiring Egro Zero Nms	
13	10110780	Powder Unit Cable Egro Zero	
14	34021008	Emc Filter	
15	34200338	Power Relay 240V	
	34200339	Power Relay 12V	

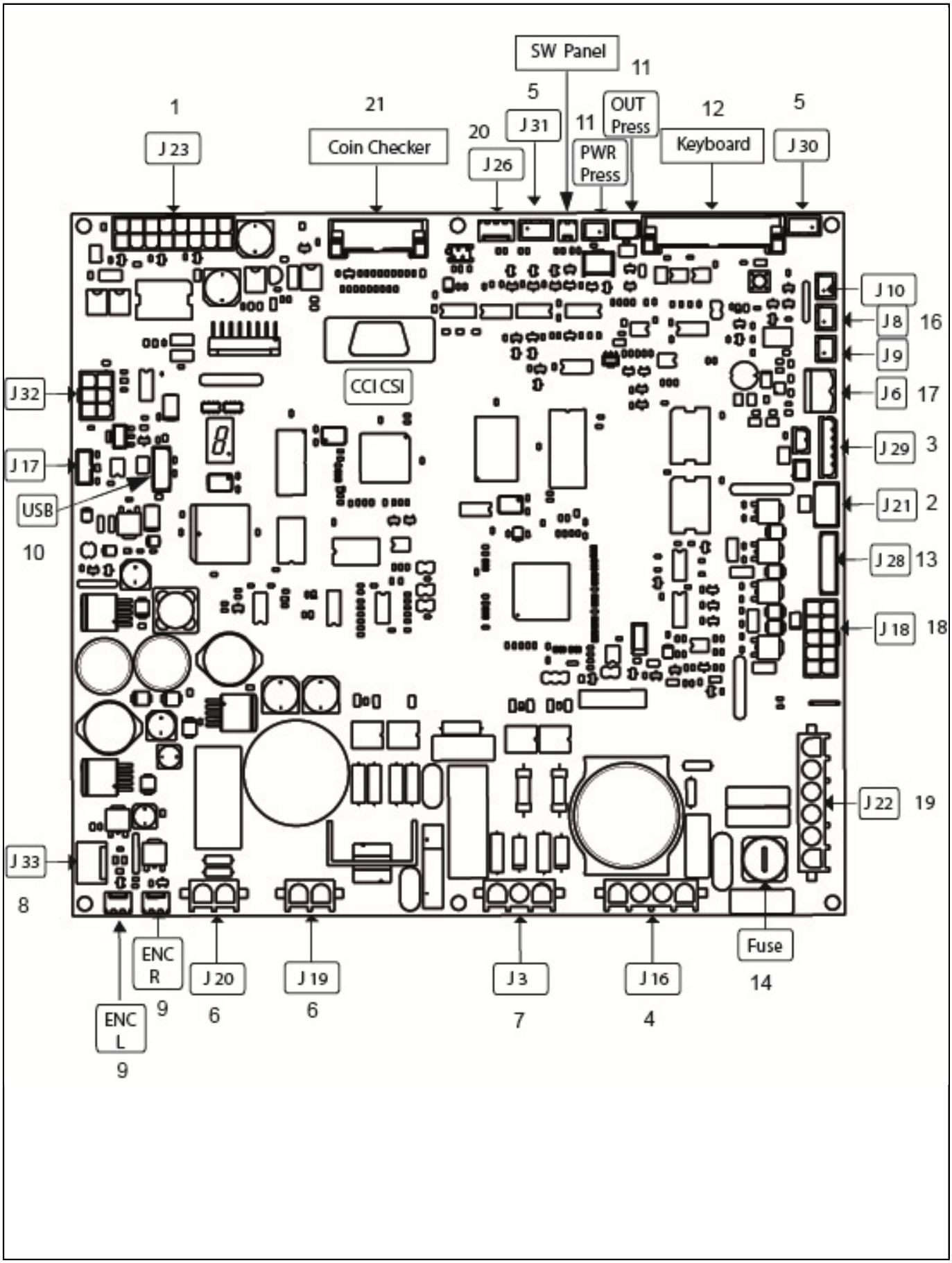
SW Panel
11
5
1
21
J 31
11
OUT Press
12
5
J 23
Coin Checker
20
J 26
PWR Press
Keyboard
J 30
J 10
J 8
16
J 9
J 32
CCI CSI
J 6
17
J 29
3
J 17
USB
J 21
2
10
J 28
13
J 18
18
J 22
19
J 33
8
ENC R
J 20
J 19
J 3
J 16
Fuse
14
ENC L
9
9
6
6
7
4

Pos.	Code	Description	Notes
1	10110775		
2	10110777	Wiring Coffee Boiler Zero	firem boiler
	10110846	Power Cable 230V Egro Zero Dhe	
	10110870	Power Cable 110V Zero Dhe	
3	10110778	Steam Boiler Cable Egro Zero	
	10110845	Steam Power Cable 230V Egro Zero Dhe	
4	10110846	Power Cable 230V Egro Zero Dhe	
	10110870	Power Cable 110V Zero Dhe	
5	10110781	Micro Cable Egro Zero	
6	10110785	Wiring Grinder Egro Zero	110V & 230V
7	10110780	Powder Unit Cable Egro Zero	
	10110787	STEAM POWER WIRING ZERO	
	10110845	Steam Power Cable 230V Egro Zero Dhe	
	10110869	Steam Power Cable 110V Zero Dhe	
8	10110774	Wiring Switching Zero	
9	10110784		
10	10110782	Usb Extension Cable Egro Zero	
	10110784		
11	10120004	Cable Pressure Probe	
	34200288	Pressure Sensor	
12	10110789	Keyboard Wiring	
13	10110779	MILK SYSTEM WIRING ZERO	
	10110820	Wiring Egro Zero Nms	
14	10110841	Cable Grinder Fuse 110V Zero	
	10110842	Grinder Fuse Cable 230V Egro Zero	
15	10120010		
16	10110771	Wiring Motor Cpu Powder Module	
	10110840	Wiring Bypass Zero	for bypass (Y20)retrofit connect to J8 / für Bypass nachrüstung anschliessen an J8
17	10110775		
18	10110780	Powder Unit Cable Egro Zero	
21	10110001	Flat Cable Pay System Machine 16 Poles	

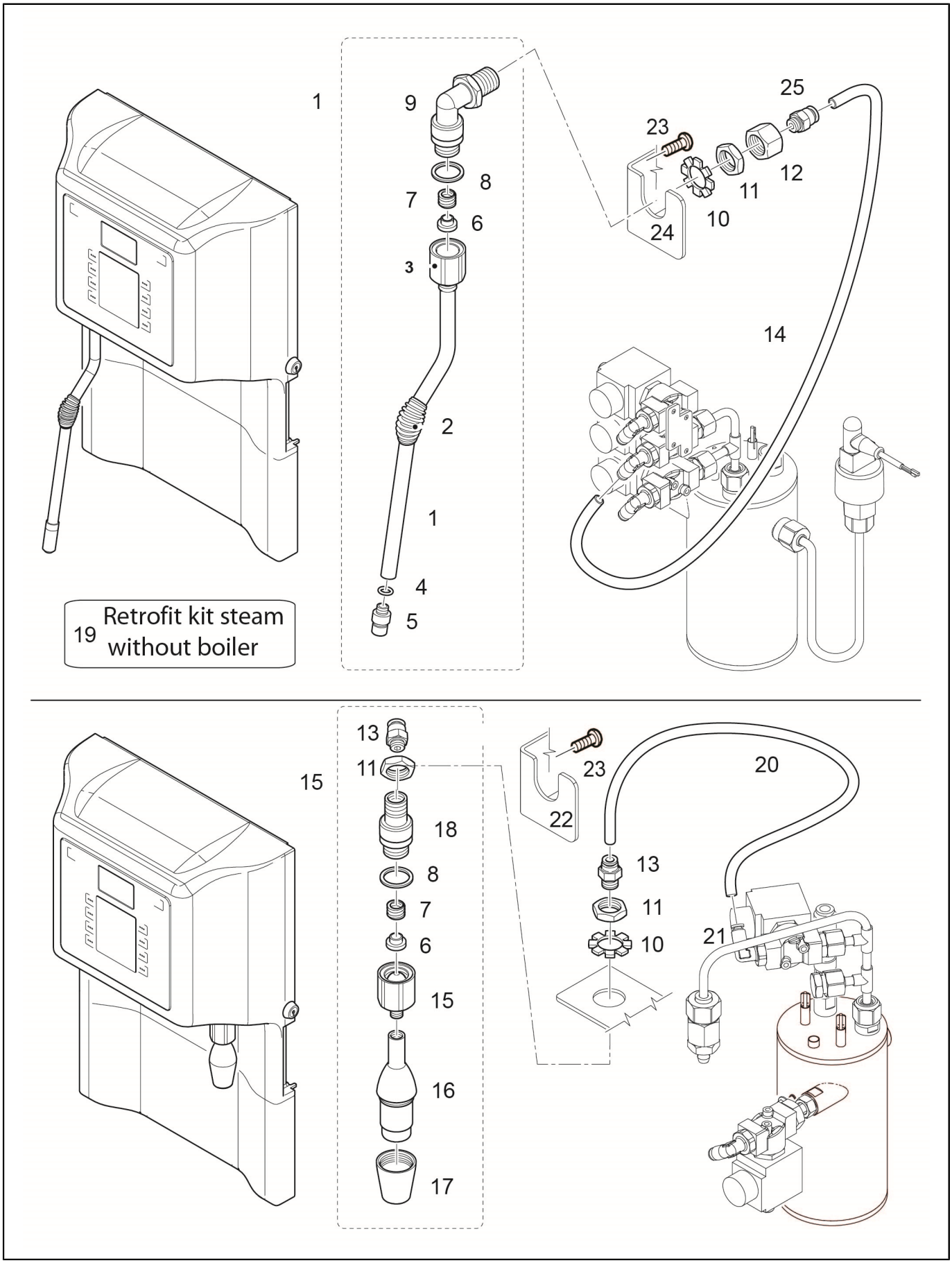
1
9
8
7
6
3
2
1
4
5
25
23
12
11
10
24
14
19 Retrofit kit steam without boiler
15
13
11
18
8
7
6
15
16
17
23
22
20
13
11
10
21

Pos.	Code	Description	Notes
1	10701039	Steam Wand Zero Assy.	
2	36990004	Rubber For Steam Pipes	
3	23000339	Nut Connection Wand Inox	
4	36301050	O-Ring 6.4X1.9	
5	23000115	Steam Sprayer Silvia	
	25111006	Steam Nozzle	
6	36930016	Gasket Teflon Connection Steam Wand	
7	39110038	Spring Connection Steam Tap	
8	36930017	Teflon Gasket For Steam Wand Nut	
9	20200113	Hot Water Connection Brass	
10	37431600	Outer Toothed Washer D16	
11	26220005	Flat Nut 3/8	
12	00100855.001	Sleeve	
13	69200134	Straight Connector G1/8 X 4	
14	38228073	Teflon Hose Fep D. 6 X 4	
15	10701040	Water Wand Zero Assy.	
	10701100	Water Wand Zero Assy. Right	
	23000144	Extension Inox M10 X 23Mm	
	25128014	Extension Inox M10 X 76Mm	
	25128015	Extention Inox M10 X 59Mm	
16	10049120	Water Wand Zero	
17	25135018	Lower Part Water Sprayer	
18	20200113	Hot Water Connection Brass	
	23000300	Water Wand Right Connection Zero	
20	38228072	Teflon Hose Fep D. 4,0 X 2,5	
21	69200142	Elbow Connector G1/4X4 Ppsu	
22	32551281	Bracket Water Spout	
23	00001518	Keps Nut M4	
	37040510	Screwm5 X 10Mm	
24	32551174	Steam Bracket Zero	
25	69200135	Straight Connector G1/8 X 6	

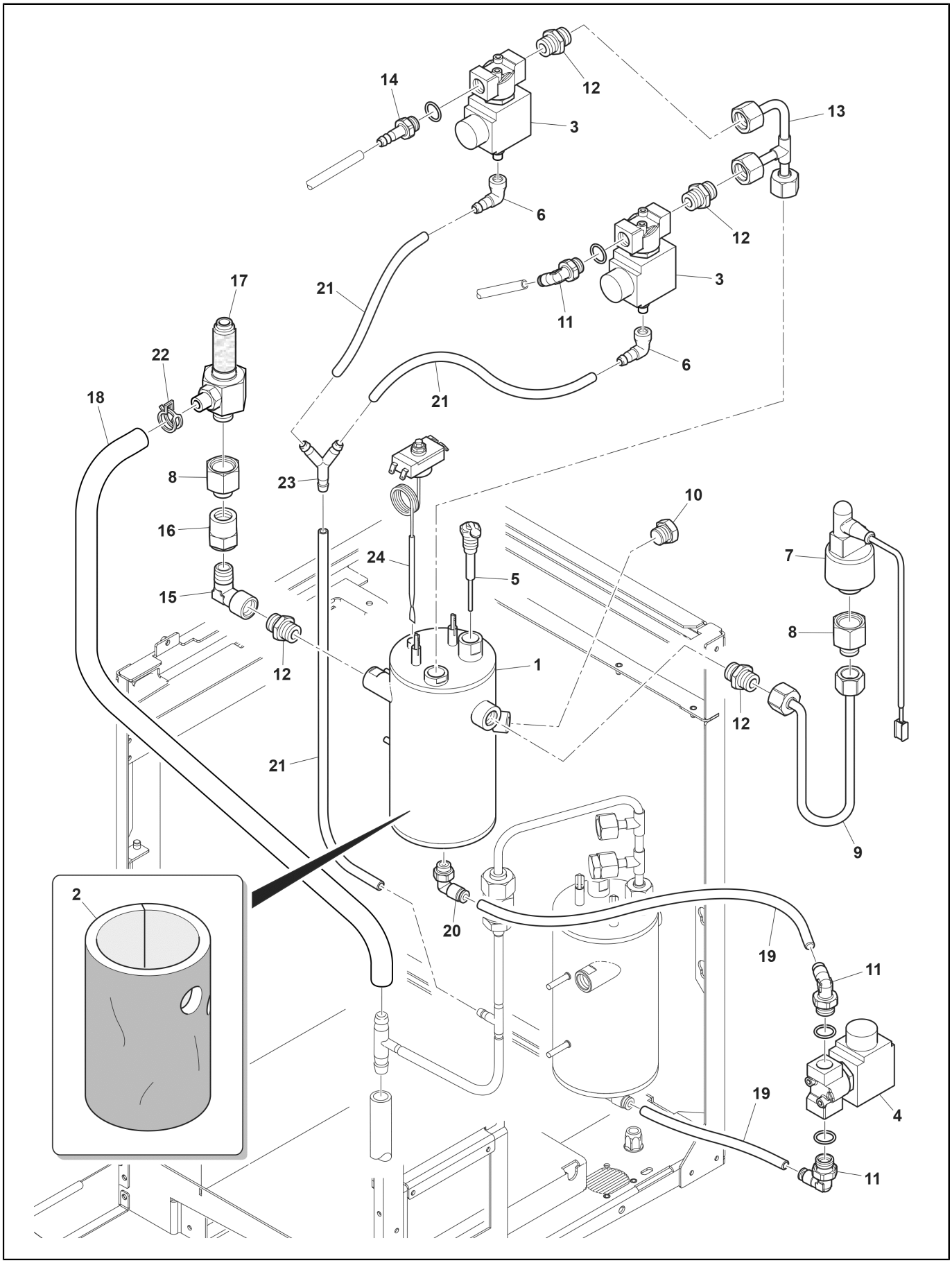
14
12
3
13
6
12
3
17
21
11
22
6
18
21
8
23
10
16
24
7
5
15
8
12
1
12
21
9
2
20
19
11
19
4
11

Pos.	Code	Description	Notes
1	10020027	Kit Steam Boiler 230V 1400W Dhe Egro Zero	
	10020028	Kit Steam Boiler 110V 1400W Zero Dhe	
	10020035	Boiler 110V 1400W Coffee/Steam Incoloy 800	
	10020036	Boiler 230V 1400W Steam Incoloy 800ï¿½	
2	69000415	Boiler Insulation	
3	00100147.001	Operator Kit 3/2 Way Water T30 (Acl)	
	00100149.001	Plunger 3/2 Water T30 (Acl)	
	34040184	Valve 3/2 24V T30 (Sirai)	
	34040184	Valve 3/2 24V T30 (Sirai)	
4	00100558.001	Valve 2/2 Water T30 (Acl)	
	00100559.001	Operator Kit 2/2 Way Water T30 (Acl)	
	00100560.001	Plunger 2/2 Water T30 (Acl)	
	34040183	Valve 2/2 24V T30 (Sirai)	
5	34200068	Level Probe Assembly 70	
6	38121034	Pipe Connector Ep5	
7	34200288	Pressure Sensor	
8	23000077	Extension Connector Pression Transducer	
9	10042103	Pipe 6X4X240 F1/4-F1/4	
10	23000289	Closing Pin G1/4	
11	69200141	Elbow Connector G1/4X6 Ppsu	
12	00048923	Double Nipple G 1/4 X G 1/4	
13	10042200	Pipe Expansion Valve-Safety Valve Zero	
14	23000316	Connector For Silicon Pipe 5Mm X G1/4	
15	00018843	Adjustable Elbowg 1/4 X D. 8Mm	
16	23000239	Connector F1/4-F1/4	
17	00039067	Relief Valve, Steam	
	00045682	Splash Guard-Hose D. 16,0 X 45,0	
18	00052557	Silicon Hose D. 18 X 12 Mm	
19	38228075	Teflon Hose 4 X 2 Fda	
20	69200139	Elbow Connector 4 X G1/8 Ppsu	
21	00004474	Silicon Hose D. 8 X 5 Mm	
22	00055795	Wire Hose Clamp 17,3 Mm	
23	00055748	Y Unit D. 6 Mm	
24	34200354	High Limit Thermostat 165/15 110V Ul	
	34200355	High Limit Thermostat 165/15 220V	

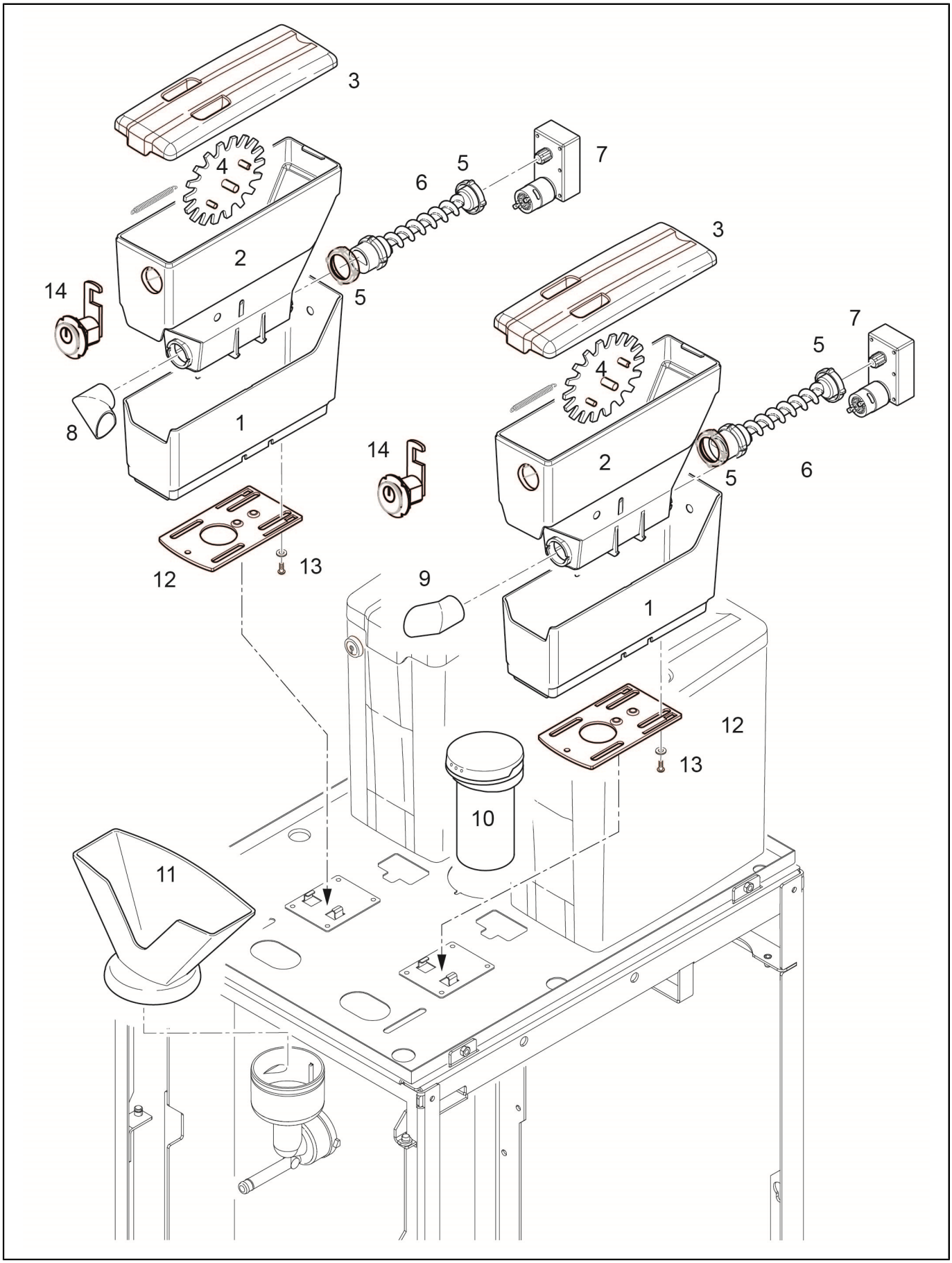
3
4
2
14
8
1
12
13
5
6
7
3
4
2
14
9
1
12
13
5
6
7
10
11

Pos.	Code	Description	Notes
1	10700302	Powder Hopper Left Egro Zero	
	10700324	Powder Hopper Right Egro Zero	
	10701311	Powder Hopper Assy. Left Self Zero	
	10701312	Powder Hopper Assy. Right Self Zero	
	38120196	Lower Powder Hopper Zero	
2	38120195	Powder Hopper Upper Part	
3	38120197	Power Hopper Cap Zero	
4	38120247	Powder Hopper Wheel	
5	38120130	Front Flange Pm	
	38120131	Rear Flange Powder Module	
	38120132	Plastic Nut Powder Hopper	
	38120133	Plastic Nut Powder Hopper	
6	38120198	Feeder Powder Hopper	
7	34010010	Powder Hopper Motor 24V	
8	38120245	Powder Slider Right	
9	38120246	Powder Slider Left	
10	00001062	Raised Cheese Head Screw M3 X 6 Mm	
	10700327	Powder Coffee Inlet Extension Zero	
	10700354		
	10701034	Coffee/Powder Inlet Zero Assy.	
	37113507	Screw Atf 3 X 6 Tcb	
	69000337	Lock 90 M15 X 17,5	
11	38120229	Powder Slider Egro Zero	
12	32331491	Bean Hopper Closing System Left	
	32331491	Bean Hopper Closing System Left	
	32331492	Bean Hopper Closing System Right	
13	23000318		
	37155011	Screw Atf Pt 4X10 Tcb Ph Inox	
	37411200	Flat Washer 12X4,3X1	
14	10705530	Lock 90 Left M15 X 17,5 With Hook 25,5	

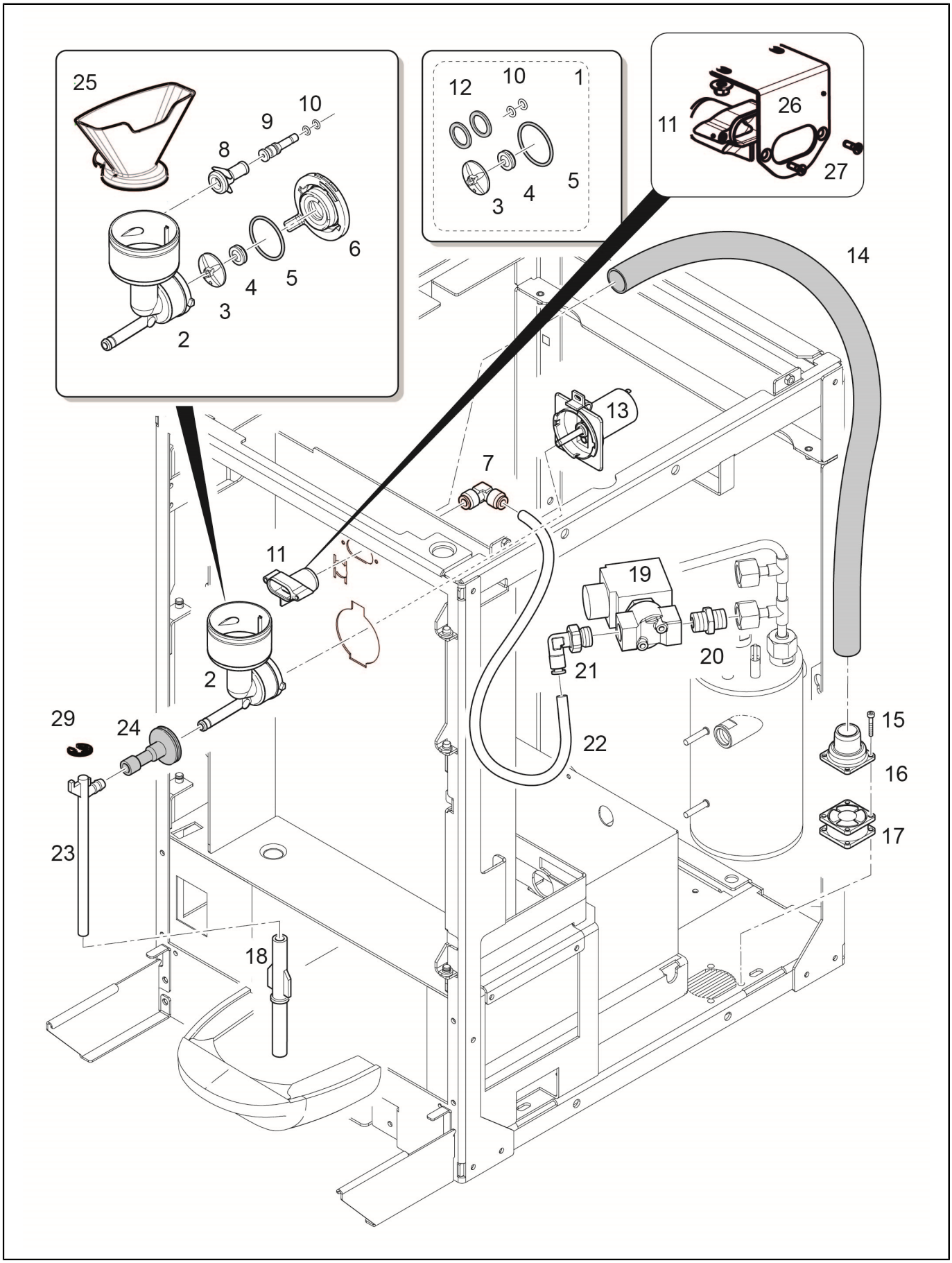
25
10
9
8
6
5
4
3
2
12
10
1
5
4
3
11
26
27
14
13
7
11
19
2
21
20
29
24
22
15
16
17
23
18

Pos.	Code	Description	Notes
1	10700284	Service Kit Powder Module	
2	38120248	Upper Mixer Cup Zero	
3	38120142	Mixer Fan Powder Module	
4	69150003	Internal Gasket Silicon Red	
5	69150004	O-Ring 65Sh For Mixer Group	
6	38120141	Fixing Mixer Powder Module	
7	69200119	Fast Connector 6 X 4 90	
8	38120140	Mixer Adapter Powder Module	
9	23000202	Water Inlet Mixer Powder Module	
10	00002197	O-Ring 5,28 X 1,78 Nbr 70Sh	
11	38120145	Mixer Manifold Powder Module	
12	69150002	O-Ring Silicone 65Sh 3075 Red	
13	34010012	Powder Mixer Motor 24V	
14	36901803	Suction Pipe 29,6 X 25	
15	37060330	Screw M3 X 30 Tcei Inox	
16	38120146	Fun Adapter Powder Module	
17	10110469	Air Suction Fan	
	32920013	Fan Protection Grid Powder Module	
18	38120215	Lower Powder Pipe	
19	00100558.001	Valve 2/2 Water T30 (Acl)	
	00100559.001	Operator Kit 2/2 Way Water T30 (Acl)	
	00100560.001	Plunger 2/2 Water T30 (Acl)	
	34040180	Operator Kit 2/2 Ways T30 24V Sirai	
	34040183	Valve 2/2 24V T30 (Sirai)	
20	23000274	Connector M1/4 X M1/4 Gas	
21	69200142	Elbow Connector G1/4X4 Ppsu	
22	38228072	Teflon Hose Fep D. 4,0 X 2,5	
23	38120216	Upper Powder Pipe	
24	36990055	Rubber Connection Powder Outlet Zero	
25	38120229	Powder Slider Egro Zero	
26	32551294		
27	37155006	Screw Atf Pt 3X10 Tsp Ph	
29	37510400	Snap Ring D. 4	

Alphanumeric index

Code	No. table	Pos.
00000928	2001	21
00000930	2001	12
00000935	2001	40
00001062	2003_02	5
00001062	Z5003	10
00001065	2002	14
00001065	Z1001_02	23
00001074	Z1000_02	8
00001074	Z2002_02	8
00001176	2001	4
00001472	Z2002_02	29
00001514	Z1001_02	23
00001517	Z1001_02	7
00001518	5000	23
00001521	2001	24
00002197	2003_02	7
00002197	Z5004	10
00004473	Z2000_02	17
00004474	Z2000_02	20
00004474	Z5002_02	21
00017719	Z1001_02	7
00018843	Z5002_02	15
00030511	Z1001_02	8
00039064	2001	8
00039067	Z5002_02	17
00044464	2003	10
00044464	Z2000_02	15
00044683	Z1001_02	7
00044824	2003	9
00045032	2001	18
00045649	Z1001_02	9
00045682	Z5002_02	17
00045714	Z2000_02	19
00045715	2003	9
00045715	2003_02	9
00046806	Z2000_02	18
00046844	1000	13
00046844	2001	28
00046844	2002	10
00046844	Z1000_02	13
00046844	Z2002_02	9
00048548	2001	13
00048550	2001	23
00048747	2001	30
00048923	Z5002_02	12
00052557	Z2000_02	22
00052557	Z5002_02	18
00054064	Z2000_02	8
00054067	Z2000_02	8
00054344	Z2000_02	23
00054861	2001	6
00055483	Z1001_02	7
00055748	Z5002_02	23
00055795	Z5002_02	22
00057446	2001	41
00060116	2001	5
00060283	2001	17
00060858	2001	27
00100013.001	Z2000_02	4
00100038.001	Z2000_02	12
00100043.001	Z2000_02	10
00100136.001	2001	7
00100147.001	Z2000_02	3
00100147.001	Z5002_02	3
00100149.001	Z2000_02	3
00100149.001	Z5002_02	3
00100186.013	Z2000_02	11

Code	No. table	Pos.
00100248.002	2003	16
00100248.002	2003_02	16
00100506.001	2001	9
00100558.001	Z2000_02	4
00100558.001	Z5002_02	4
00100558.001	Z5004	19
00100559.001	Z5002_02	4
00100559.001	Z5004	19
00100560.001	Z2000_02	4
00100560.001	Z5002_02	4
00100560.001	Z5004	19
00100855.001	5000	12
10020025	Z2000_02	1
10020026	Z2000_02	1
10020027	Z5002_02	1
10020028	Z5002_02	1
10020035	Z2000_02	1
10020035	Z5002_02	1
10020036	Z5002_02	1
10020037	Z2000_02	1
10042103	Z5002_02	9
10042199	Z2000_02	6
10042200	Z5002_02	13
10046062	Z2000_02	5
10046063	Z2000_02	5
10049120	5000	16
10054002	2001	37
10060009	Z2000_02	21
10060479	Z2000_02	21
10060607	Z2000_02	3
10110001	Z3001	21
10110469	Z5004	17
10110771	Z3000_02	2
10110771	Z3001	16
10110774	Z3000_02	7
10110774	Z3001	8
10110775	Z3000_02	3
10110775	Z3001	1
10110775	Z3001	17
10110777	Z3001	2
10110778	Z3001	3
10110779	Z3001	13
10110780	Z3000_02	13
10110780	Z3001	18
10110780	Z3001	7
10110781	Z3001	5
10110782	Z3001	10
10110784	Z3001	10
10110784	Z3001	9
10110785	Z3001	6
10110787	Z3001	7
10110789	Z3000_02	9
10110789	Z3001	12
10110820	Z3000_02	12
10110820	Z3001	13
10110840	Z3001	16
10110841	Z3001	14
10110842	Z3001	14
10110845	Z3000_02	2
10110845	Z3001	3
10110845	Z3001	7
10110846	Z3000_02	2
10110846	Z3001	2
10110846	Z3001	4
10110869	Z3001	7
10110870	Z3001	2
10110870	Z3001	4

Code	No. table	Pos.
10120004	Z3001	11
10120010	Z3001	15
10700176	2001	3
10700177	2001	2
10700178	2001	33
10700284	Z5004	1
10700302	Z5003	1
10700305	2002	11
10700305	Z2002_02	11
10700306	2002	11
10700306	Z2002_02	14
10700307	2002	11
10700307	Z2002_02	11
10700308	2002	11
10700308	Z2002_02	14
10700309	Z1001_02	15
10700313	1000	12
10700313	2002	9
10700314	1000	12
10700314	2002	9
10700315	1000	12
10700316	1000	12
10700317	1000	12
10700320	2003	25
10700321	2003	32
10700322	2003	32
10700324	Z5003	1
10700325	2003	32
10700327	Z5003	10
10700352	Z1001_02	6
10700353	2003	26
10700354	Z5003	10
10700356	2003	32
10700376	2003_02	3
10701019	Z2000_02	10
10701020	Z2000_02	12
10701034	Z5003	10
10701035	Z1001_02	3
10701036	2001	36
10701037	2002	15
10701038	2002	15
10701039	5000	1
10701040	5000	15
10701048	Z2000_02	17
10701050	2001	11
10701051	2001	1
10701052	Z3000_02	8
10701053	Z3000_02	6
10701100	5000	15
10701130	Z1000_02	12
10701130	Z2002_02	10
10701131	Z1000_02	12
10701131	Z2002_02	10
10701132	Z1000_02	12
10701132	Z2002_02	10
10701133	Z1000_02	12
10701133	Z2002_02	10
10701134	Z1000_02	12
10701134	Z2002_02	10
10701135	Z1000_02	12
10701135	Z2002_02	10
10701142	Z1001_02	6
10701151	2003	32
10701290	Z2002_02	1
10701291	Z2002_02	1
10701311	Z5003	1
10701312	Z5003	1

Alphanumeric index

Code	No. table	Pos.
10701340	Z2002_02	29
10701341	Z2002_02	29
10701347	2002	1
10701347	Z1000_02	12
10701347	Z2002_02	1
10701467	2003_02	1
10701468	2003_02	1
10701642	Z2000_02	13
10705529	1000	7
10705529	2002	4
10705529	Z1000_02	7
10705529	Z1001_02	14
10705529	Z2002_02	14
10705529	Z2002_02	4
10705530	Z5003	14
10705690	Z1001_02	2
10705698	1000	6
10705698	Z1000_02	6
10705698	Z2002_02	14
10705708	1000	6
10705750	1000	3
10705750	2003	23
10705750	2003_02	19
10705750	Z1000_02	3
10705755	2002	16
10705755	2002	18
10705755	Z2002_02	16
10705755	Z2002_02	16
10705755	Z2002_02	21
10705755	Z2002_02	21
10781312	1000	4
10781312	Z1000_02	4
10880306	1000	14
10905151	Z1001_02	5
20200113	5000	18
20200113	5000	9
23000077	Z5002_02	8
23000094	2003	28
23000115	5000	5
23000144	5000	15
23000202	Z5004	9
23000223	Z1001_02	17
23000239	Z5002_02	16
23000242	2003	28
23000274	Z2000_02	14
23000274	Z5004	20
23000289	Z2000_02	15
23000289	Z5002_02	10
23000300	5000	18
23000306	1000	20
23000306	Z1000_02	20
23000309	Z2000_02	24
23000316	Z5002_02	14
23000318	Z5003	13
23000339	5000	3
23000351	Z2002_02	23
23000352	Z2002_02	22
23000377	2003	24
23000378	2003	5
24300010	2001	32
25111006	5000	5
25128014	5000	15
25128015	5000	15
25135018	5000	17
26220005	5000	11
27350014	Z2000_02	3
27350014	Z2000_02	8

Code	No. table	Pos.
30001048	2001	19
32331443	2001	20
32331489	1000	4
32331489	Z1000_02	4
32331491	Z5003	12
32331491	Z5003	12
32331492	Z5003	12
32331498	2001	14
32331776	Z1001_02	7
32331779	Z1001_02	7
32331905	Z2002_02	18
32331906	Z2002_02	18
32331907	Z2002_02	17
32331908	Z2002_02	17
32331910	2002	3
32331910	Z2002_02	3
32332146	Z1000_02	24
32332147	Z1000_02	23
32551116	Z1001_02	24
32551162A	1000	1
32551162A	Z1000_02	1
32551163A	1000	2
32551163A	Z1000_02	2
32551169	2003	12
32551173	Z1001_02	23
32551174	5000	24
32551187	Z1001_02	13
32551190	1000	14
32551281	5000	22
32551290	Z1000_02	20
32551291	1000	21
32551291	Z1000_02	20
32551294	Z5004	26
32551377	2003_02	9
32551387	2003_02	12
32920013	Z5004	17
34010010	Z5003	7
34010012	Z5004	13
34011023	2003	1
34011026	2003	1
34011029	2003	1
34011041	2003_02	2
34020125	2001	35
34020128	2003	27
34020129	1000	3
34020129	Z1000_02	3
34021008	Z3000_02	14
34030079	Z3000_02	1
34040125	2003	3
34040177	Z2000_02	4
34040178	Z2000_02	3
34040180	Z2000_02	4
34040180	Z5004	19
34040181	Z2000_02	3
34040183	Z2000_02	4
34040183	Z5002_02	4
34040183	Z5004	19
34040184	Z2000_02	3
34040184	Z5002_02	3
34040184	Z5002_02	3
34070053	2003	9
34070280	Z3000_02	11
34070300	Z3000_02	7
34070314	Z3000_02	7
34100021	Z1001_02	23
34100021	Z1001_02	24
34150023	Z3000_02	10

Code	No. table	Pos.
34150023	Z3000_02	6
34150052	2003_02	20
34200044	2003	1
34200068	Z5002_02	5
34200071	2001	39
34200103	Z1000_02	21
34200288	Z3001	11
34200288	Z5002_02	7
34200322	Z2000_02	25
34200322	Z3000_02	4
34200323	Z2000_02	25
34200323	Z3000_02	4
34200338	2003_02	15
34200338	2003_02	4
34200338	Z3000_02	15
34200339	2003_02	4
34200339	Z3000_02	15
34200354	Z3000_02	5
34200354	Z5002_02	24
34200355	Z3000_02	5
34200355	Z5002_02	24
34209126	Z2000_02	16
35002512	2003_02	6
36301050	5000	4
36322005	2003	14
36404059	1000	17
36404059	Z1000_02	17
36901803	Z5004	14
36901804	2003	21
36901804	2003_02	17
36901957	2003	25
36930016	5000	6
36930017	5000	8
36930018	Z1001_02	17
36930110	2001	10
36930111	2001	22
36930112	Z2002_02	20
36930113	Z1000_02	8
36930113	Z2002_02	8
36930116	Z2002_02	24
36990004	5000	2
36990034	2002	7
36990034	Z2002_02	7
36990037	1000	18
36990037	Z1000_02	18
36990055	Z5004	24
36990056	2003	4
36990057	2003	13
36990057	2003_02	13
37030310	Z1001_02	24
37030435	Z2002_02	20
37030509	2003	15
37030509	2003	29
37030509	2003_02	14
37040409	2001	26
37040409	2001	40
37040410	2003_02	9
37040410	Z1001_02	23
37040410	Z2002_02	19
37040506	2003_02	12
37040510	5000	23
37060306	2001	38
37060330	Z5004	15
37113507	Z1000_02	6
37113507	Z2002_02	14
37113507	Z5003	10
37113508	2002	6

Alphanumeric index

Code	No. table	Pos.
37155002	Z2002_02	6
37155006	Z5004	27
37155011	2001	25
37155011	Z5003	13
37320604	Z2002_02	19
37410300	2002	6
37410310	Z2002_02	6
37411200	Z5003	13
37420300	2001	38
37430500	2003_02	12
37431600	5000	10
37510400	Z5004	29
37510600	Z2002_02	25
37521001	Z2000_02	9
37620308	Z2002_02	26
37900115	Z1001_02	19
38120115	2001	31
38120119	2001	30
38120120	2001	29
38120127	Z2000_02	7
38120130	Z5003	5
38120131	Z5003	5
38120132	Z5003	5
38120133	Z5003	5
38120140	Z5004	8
38120141	Z5004	6
38120142	Z5004	3
38120145	Z5004	11
38120146	Z5004	16
38120182	Z1001_02	7
38120183	Z1001_02	7
38120192	2002	2
38120192	Z2002_02	2
38120193	Z1001_02	1
38120195	Z5003	2
38120196	Z5003	1
38120197	Z5003	3
38120198	Z5003	6
38120205	1000	9
38120205	Z1000_02	9
38120207	Z3000_02	1
38120209	Z1001_02	11
38120210	Z1001_02	12
38120211	Z1001_02	10
38120212	1000	22
38120212	Z1000_02	22
38120212	Z1000_02	3
38120213	Z1001_02	16
38120215	Z5004	18
38120216	Z5004	23
38120217	2002	8
38120223	2003	25
38120224	2003	25
38120229	Z5003	11
38120229	Z5004	25
38120245	Z5003	8
38120246	Z5003	9
38120247	Z5003	4
38120248	Z5004	2
38120253	1000	19
38120253	Z1000_02	19
38120254	1000	19
38120254	Z1000_02	19
38120277	Z1001_02	11
38120591	1000	5
38120591	Z1000_02	5
38121034	Z5002_02	6

Code	No. table	Pos.
38123087	Z2002_02	30
38123568	1000	10
38123568	Z1000_02	10
38123852	1000	11
38123852	Z1000_02	11
38221020	1000	16
38221020	Z1000_02	16
38228072	2001	15
38228072	2003	17
38228072	2003	7
38228072	2003_02	25
38228072	5000	20
38228072	Z2000_02	16
38228072	Z5004	22
38228073	2003	22
38228073	2003_02	18
38228073	5000	14
38228075	Z5002_02	19
39110026	2001	34
39110038	5000	7
39110062	Z1001_02	18
39110085	2003	25
39920017	2002	13
39920019	Z2002_02	27
45010208	Z1001_02	4
45010209	1000	15
45010209	Z1000_02	15
69000337	1000	8
69000337	2002	5
69000337	Z1000_02	7
69000337	Z2002_02	4
69000337	Z5003	10
69000415	Z2000_02	2
69000415	Z5002_02	2
69111016	2003	25
69111017	2003	25
69140036	2002	12
69140036	Z2002_02	12
69140039	2002	17
69140039	Z2002_02	11
69140039	Z2002_02	14
69140045	Z2002_02	12
69150002	Z5004	12
69150003	Z5004	4
69150004	Z5004	5
69200069	2003	2
69200095	2003	6
69200119	Z5004	7
69200133	2001	16
69200133	2003	6
69200134	5000	13
69200135	5000	25
69200139	2003	18
69200139	2003	8
69200139	Z2000_02	8
69200139	Z5002_02	20
69200141	Z5002_02	11
69200142	2003	11
69200142	5000	21
69200142	Z2000_02	7
69200142	Z5004	21
69200154	2003	20
69200154	2003_02	10
69200155	2003_02	11
69200156	Z2002_02	28
69200166	2003_02	8
69200167	2003_02	7

Code	No. table	Pos.
69200168	2003_02	26
69200173	Z2000_02	8
69200175	2003	31
69200187	2003	19
69200187	2003	30

Contacts

HEADQUARTERS, PRODUCTION PLANT AND R&D CENTERS

Rancilio Group s.p.a.
Viale della Repubblica 40
20010 Villastanza di Parabiago
Milano - Italy
Tel +39 0331 408200
Fax +39 0331 551437
www.ranciliogroup.com
info@ranciliogroup.com

Egro Suisse AG
Bahnhofstrasse 66
5605 Dottikon - Switzerland
Tel. +41 (0)56 616 95 95
Fax +41 (0)56 616 95 97
www.egrocoffee.com
info@egrocoffee.com

WORLDWIDE BRANCH LOCATIONS

SPAIN
RancilioGroup Espana, s.a.
Gran Vía de Carlos III, 84 3ª
Edificio Trade
08028 Barcelona - Spain
Ph. +34 902 884 275
Ph. +34 934 923 414
Fax +34 934 965 701
www.ranciliogroup.com
info-es@ranciliogroup.com

PORTUGAL
Rancilio Group Portugal Lda
Estrada da Falagueira nº 68 E
2700-365 Amadora-Lisboa - Portugal
Ph. + 351 21 019 10 91
Fax + 351 21 019 10 91

Rua Nova do Seixo 1282
4465-706 Leca do Balio-Porto - Portugal
Ph. + 351 22 010 14 19
Fax + 351 22 010 14 19
www.ranciliogroup.com
info-pt@ranciliogroup.com

GERMANY
Rancilio Group Deutschland GmbH
Talstrasse 27
97990 Weikersheim - Germany
Ph. +49 7934 99 29 30
Fax +49 7934 99 29 330
www.ranciliogroup.de
info-de@ranciliogroup.com

SWITZERLAND
Egro Suisse AG
Bahnhofstrasse 66
5605 Dottikon - Switzerland
Tel. +41 (0)56 616 95 95
Fax +41 (0)56 616 95 97
www.egrosuisse.ch
info@egrosuisse.ch

USA/CANADA
RancilioGroup North America Inc.
1340 Internationale Parkway / Suite 200
Woodridge, IL 60517 - U.S.A.
Ph: +1 630 914 7900
Fax: +1 630 914 7901
Toll Free: +1 877 726 2454
www.ranciliogroup.com
info@ranciliogroupna.com