EGRO
SWISS COFFEE TECHNOLOGY

E203040 v.54

SPARE PARTS CATALOGUE

en-US

EGRO 90 SERIES

EGRO 90 SERIES

Index

Table K12382_02 - Housing S 90 02....4
Table K12382_01 - Housing S 90 01....6
Table K09310_01 - Bean Hopper....8
Table K09314_01 - Grinder and manual Coffee dosing....10
Table K09210_01 - Brewing valve....12
Table K09430_01 - Coffee boiler....14
Table K09470_01 - Cappuccino foamer head....16
Table K09390_01 - Heated Cup rack....18
Table K09500_01 - Automatic dosing device....20
Table K09470_02 - Cappuccino foamer head....22
Table K10110_01 - Coffee spouts assay....24
Table K11175_01 - Water pump....26
Table K09444_01 - Level control unit with valve block....28
Table K10242_01 - Flowmeter and relief valve....30
Table K09770_01 - Brewing group....32
Table K09770_02 - Brewing group top part....34
Table K09770_03, - Brewing group hydraulic....36
Table K10105_01 - Brewing piston....38
Table K09160_01 - Steam boiler....40
Table K09160_02 - Steam boiler....42
Table K09399_01 - Valve block 1....44
Table K09302_01 - Hot Water spout....46
Table K09412_01 - Steam spout....48
Table K09710_02 - Terminal BOX....50
Table K09710_03 - Terminal BOX....52
Table K09380_01 - ELECTRICAL....54
Table K09380_02 - ELECTRICAL....56
Table A10001_05 - material of use + literature....58
Table K10000_03 - Service + Repair kits....60
Alphanumeric index....62

K12382_02

Housing S 90 02

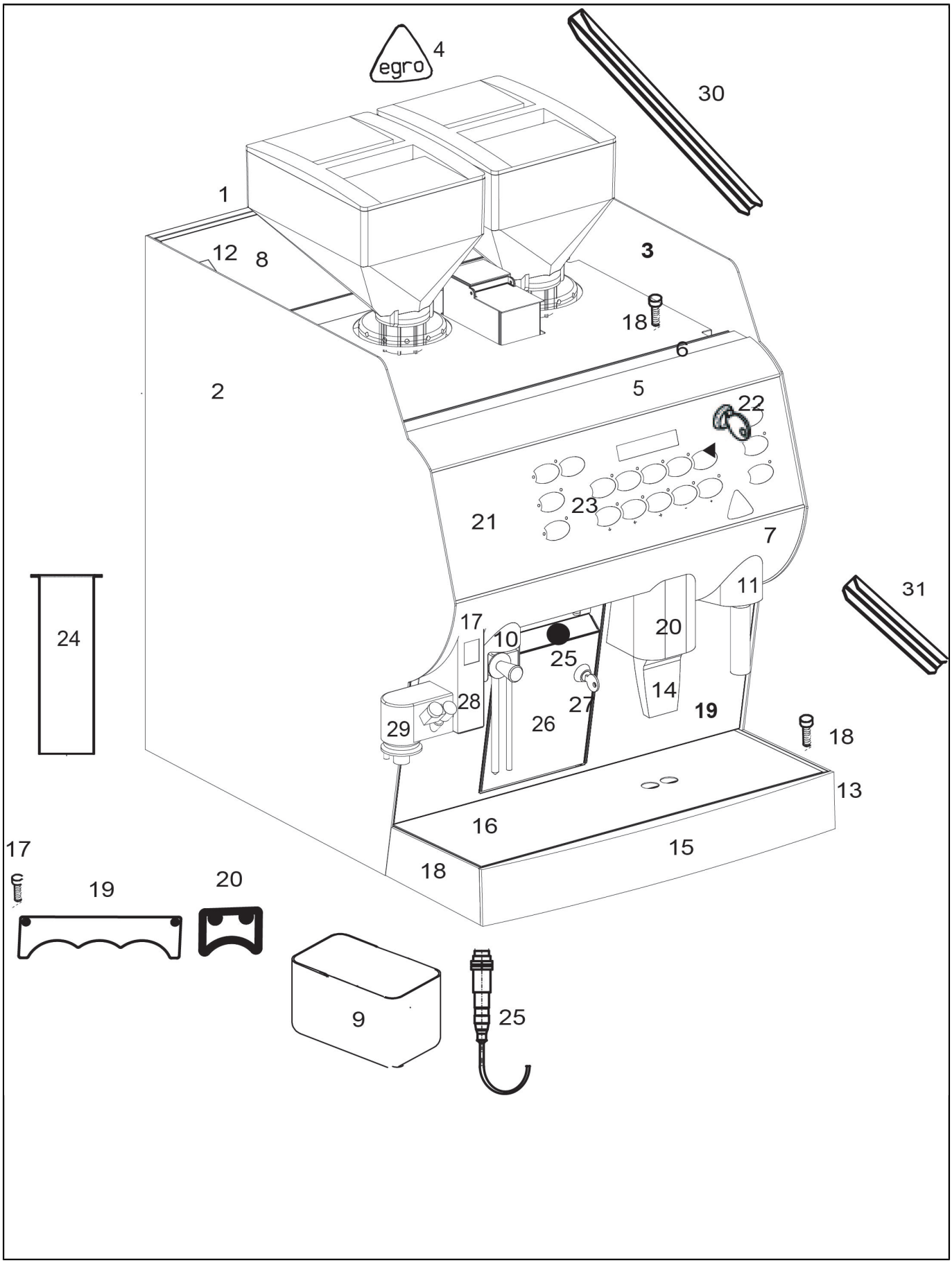

K12382_02

Housing S 90 02

POS.	CODE	DESCRIPTION	NOTES
1	00051826	REAR PANEL ASSAY. SERIE 93 / 94	
	00052960	REAR PANEL ASSAY. SERIE 91 / 92	
2	00051819	SIDE PANEL LEFT	
3	00051823	SIDE PANEL RIGHT	
4	45010209	EGRO LOGO	
5	00051817	FRONT HOUSING 93 / 94 SERIES	
	00052801	FRONT HOUSING 91 / 92 SERIES	
6	00050090	PROFILE COVERSERIE 93 / 94	
	00052151	PROFILE COVERSERIE 91 / 92	
7	00051818	COVERWITH CAPP 93 / 94 SERIES	
	00052524	COVERWITHOUT CAPP 93 / 94 SERIES	
	00052816	COVERWITHOUT CAPP 91 / 92 SERIES	
	00053170	COVERWITHOUT CAPP WITHOUT TEE 91 / 92 SERIES	
8	00018120	METAL BACK SHEET 91 / 92	
	00018122	METAL BACK SHEET 93 / 94	
9	00018172	GROUNDS DRAWER ASSAY.	
10	00051850	STEAM SPOUT COLLAR	
11	00051851	HOT WATER SPOUT COLLAR	
12	00019804		
	00032307	KEY TO MAINSWITCH	
13	00051785	SIDE PANEL RIGHT	
14	00026730	SWING SPOUT	
15	00051781	FLOWLIMITER TO DRAIN TRAY SERIE 93 / 94	
	00052954	FLOWLIMITER TO DRAIN TRAY SERIE 91 / 92	
16	00050191	DRIP-PAN SERIE 93 / 94	
	00052144	DRIP-PAN SERIE 93 / 94	
17	00050489	COVERWITHOUT CAPP	
18	00051786	SIDE PANEL LEFT	
19	00050198	FRONT PLATE 93 / 94 SERIES	
	00052154	FRONT PLATE 91 / 92 SERIES	
20	00050184	COFFEE SPOUT COLLAR	
21	00058336	KEYBOARD FOIL (NOT P 91/92)	
	00058340	KEYBOARD FOIL (P 93/94)	
22	00004452	KEY P	
	00004454	KEY X	
	00019165	KEY LOCK SWITCH	
23	00060906	IN LATE PLATE SET NL	
	00060907	IN LATE PLATE SET AE	
	00060908	IN LATE PLATE SET CH GERMAN	
	00060909	IN LATE PLATE SET JP/KR	
	00060910	IN LATE PLATE SET CH F / DK	
	00060911	IN LATE PLATE SET DE / A	
24	00019009	GROUNDS DROPPING ASSAY. RETROFIT KIT	
25	00018172	GROUNDS DRAWER ASSAY.	
	00018268	REFLECTOR 20.0MM (DRAWER)	
26	00023764	DOOR WITHOUT LOCK	
	00027893	DOOR WITH LOCK	
27	10705527	LOCK ASSAY. RONIS D. 12,0 MM	
	10705529	LOCK ASSAY. RONIS M15X17,5 WITH HOOK 25.5MM	
28	00050143	COVERFOR CAPPUCCINO	
29	00039078	CAPPUCCINO , RETROFIT KIT	
30	00050490	END SECTION SIDE PANEL	
31	00050491	END SECTION TO DRIP PAN	

K12382_01

Housing S 90 01

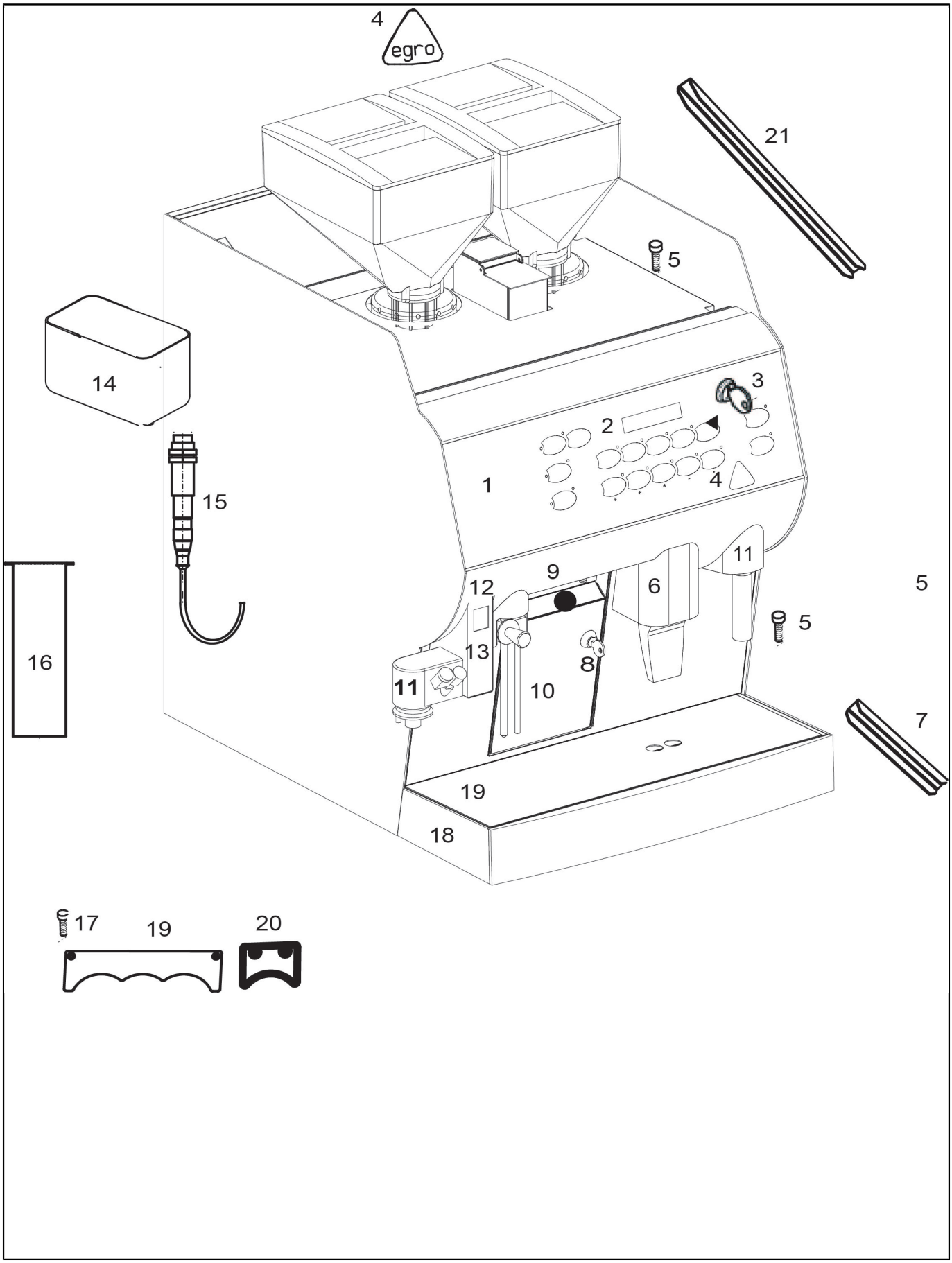

K12382_01

Housing S 90 01

POS.	CODE	DESCRIPTION	NOTES
1	00058336	KEYBOARD FOIL (NOT P 91/92)	
	00058340	KEYBOARD FOIL (P 93/94)	
2	00060906	IN LATE PLATE SET NL	
	00060907	IN LATE PLATE SET AE	
	00060908	IN LATE PLATE SET CH GERMAN	
	00060909	IN LATE PLATE SET JP/KR	
	00060910	IN LATE PLATE SET CH F / DK	
	00060911	IN LATE PLATE SET DE / A	
3	00004452	KEY P	
	00004454	KEY X	
	00019165	KEY LOCK SWITCH	
4	45010209	EGRO LOGO	
5	37030509	SCREW M5 X 10 TCB PH INOX	
6	00050184	COFFEE SPOUT COLLAR	
7	00050491	END SECTION TO DRIP PAN	
8	10705527	LOCK ASSAY. RONIS D. 12,0 MM	
	10705529	LOCK ASSAY. RONIS M15X17,5 WITH HOOK 25.5MM	
9	00018268	REFLECTOR 20.0MM (DRAWER)	
10	00023764	DOOR WITHOUT LOCK	
	00027893	DOOR WITH LOCK	
11	00039078	CAPPUCCINO , RETROFIT KIT	
12	00018864	SWITCH WITH CABLE TO Y 17	
13	00050143	COVERFOR CAPPUCCINO	
14	00018172	GROUNDS DRAWER ASSAY.	
15	00019163	PHOTO SWITCH COMP. FOR DRAWER	
16	00019009	GROUNDS DROPPING ASSAY. RETROFIT KIT	
17	00001515	NUT M3	
	00027060	RAISED COUNTERSUNK HEAD SCREW M3 X 8 MM	
19	00052608	CUP GUIDE SET FOR 3 CUPS	
20	00052606		
21	00050490	END SECTION SIDE PANEL	

K09310_01

Bean Hopper

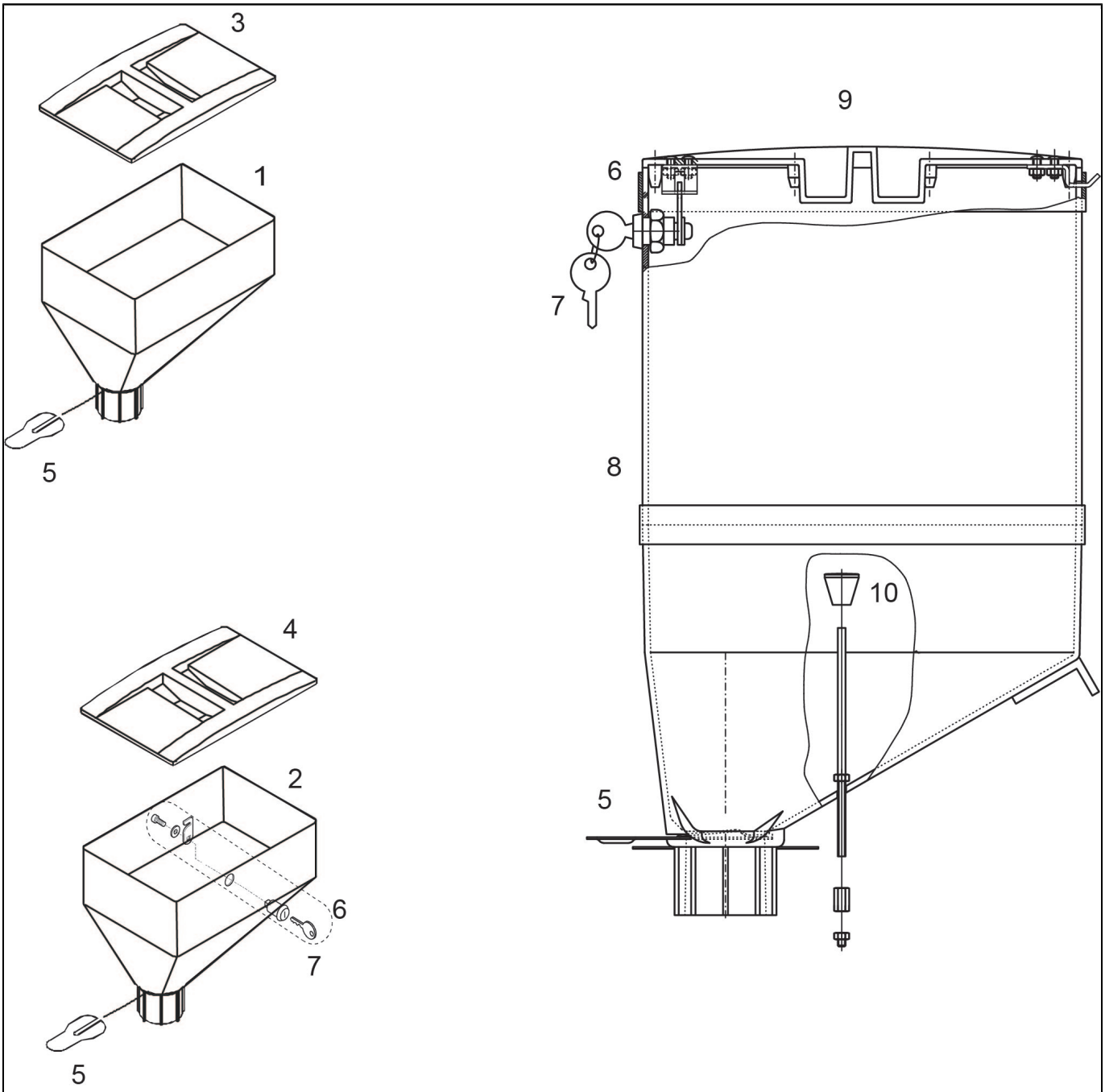

K09310_01

Bean Hopper

POS.	CODE	DESCRIPTION	NOTES
1	00046420	BEAN HOPPER CPL. SPIRIT	
2	00046548	BEAN HOPPER ASSAY. WITH LOCK1,5 KG	
3	00019708	COVERFOR BEANS HOPPER	
4	00034569	COVERWITH KEY	
5	00019709	SLIDER, BEANS HOPPER	
6	10705530	LOCK 90 LEFT M15 X 17,5 WITH HOOK 25,5	
7	10705529	LOCK ASSAY. RONIS M15X17,5 WITH HOOK 25.5MM	
8	00034572	BEAN HOPPER 3,0 KG	
	00034583	BEAN HOPPER ASSAY. WITH LOCK 3,0 KG	
9	00034569	COVERWITH KEY	
10	00034566	ROD ASSAY.	

K09314_01

Grinder and manual Coffee dosing

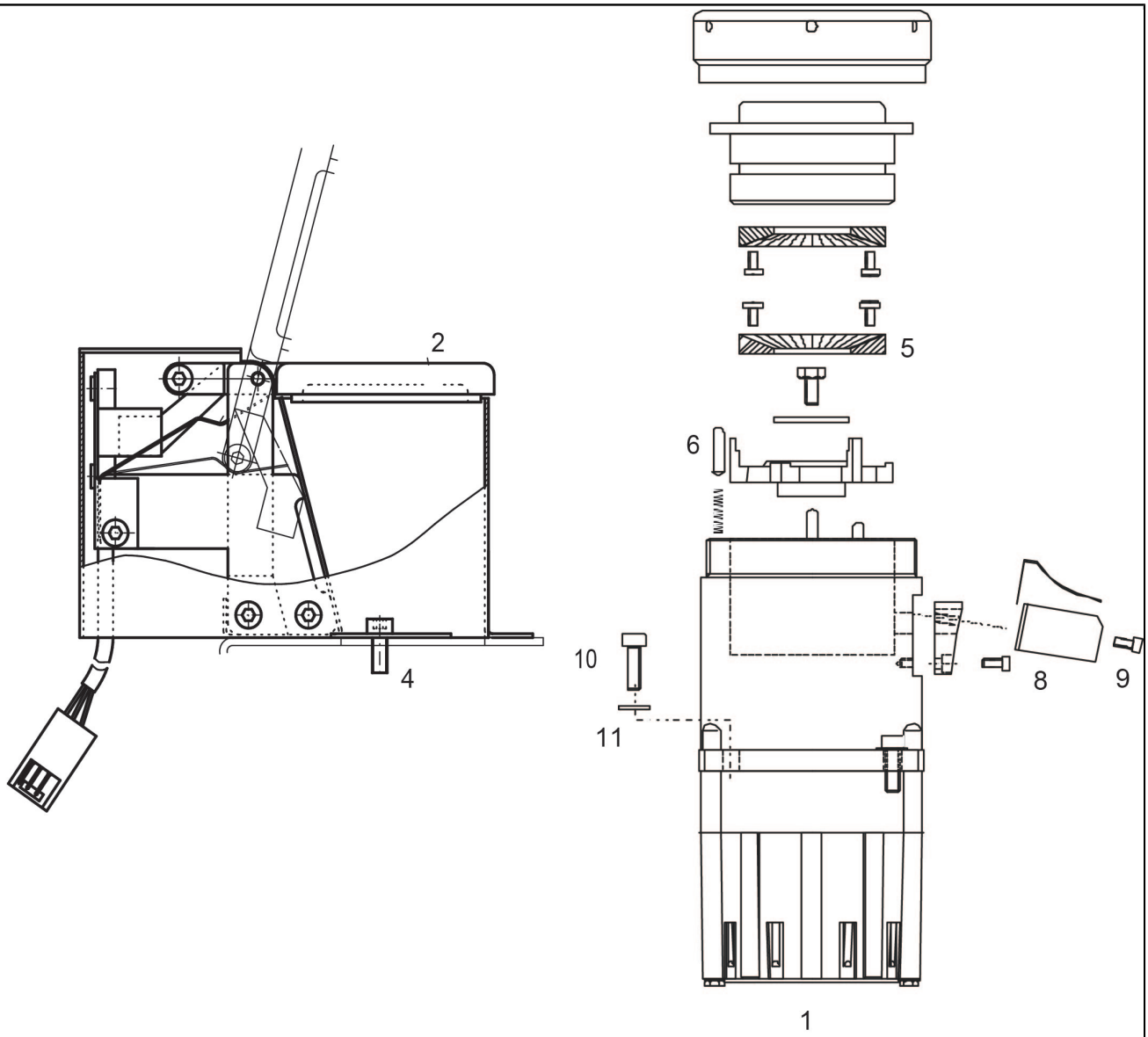

K09314_01

Grinder and manual Coffee dosing

POS.	CODE	DESCRIPTION	NOTES
1	00041704	GRINDER ASSAY. 3X400V	
	00052909	GRINDER ASSAY. 3X400V REPLACEMENT	
2	00040824	SENSOR TO COFFEE-DOSER ASSAY.	
4	00000930	HEX SOCKET HEAD SCREW M5 X 25 MM	
5	00037887	GRINDER PLATES, PAIR D. 64 X 56 X 8,8 MM	
6	00030625	PRESS PINS D. 5 X 22 MM	
8	00041695	OUTLET	
9	00000928	HEX SOCKET HEAD SCREW M4 X10 MM	
	00041696	PLATE SPRING	
10	00017151	HEX SOCKET SCREW STAINLESSM6 X 20 MM	
11	00001971	STRAIN WASHER M6	

K09210_01

Brewing valve

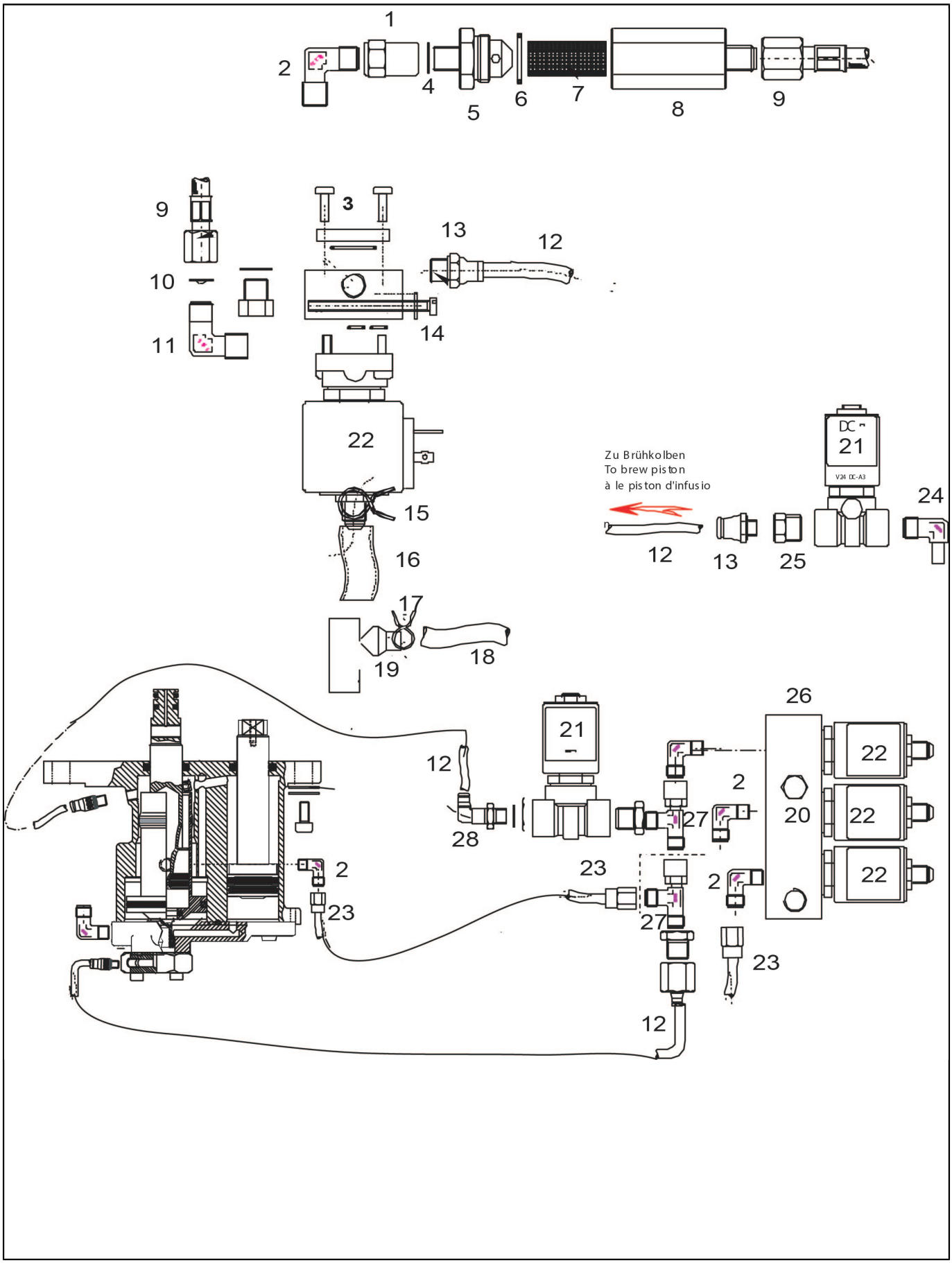

K09210_01

Brewing valve

POS.	CODE	DESCRIPTION	NOTES
1	00004122	ADAPTER NUTD. 1/8 - 1/8	
2	00004116	THREADED MALE NIPPLED. 1/8 X G 1/8	
3	00001074	CROSSED RAISED CHEESE HEAD SCREW M4 X 10 MM	
4	00009917	GASKET 12,5 X 9,8 X 1,2 COPPER	
5	00011028	FILTER COVERTHREADED FITTING	
6	00002250	O-RING 15,6 X 1,78 EPDM 70SH	
7	00004724	SIEVE CONNECTION 32.0 X 13.50MM	
8	00011027	FILTER HOUSING	
9	00100821.001	TEFLON REPAIR KITL = 300 MM	
10	00004713	FLOW LIMITER D. 0,6 MM	
11	00004112	THREADED MALE ELBOW D. 3/8 X G 1/4	
12	38228072	TEFLON HOSE FOP D. 4,0 X 2,5 MM	
13	69200134	FAST STRAIGHT CONNECTOR G1/8 X 4	
14	00001294	CYLINDER SCREW M5 X 50 MM	
15	00004491	HOSE CLAMP D. 8,0 MM	
16	00004473	SILICON HOSE D. 14 X 9 MM	
17	00018821	HOSE CLAMPD. 5,5 MM	
18	00004474	SILICON HOSE D. 8 X 5 MM	
19	00004019	T - CONNECTOR D. 12 MM	
20	00054052	VALVE BLOCK ASSAY.	
21	00100559.001	OPERATOR KIT 2/2 WAY WATER T30 (ACL)	
	00100560.001	PLUNGER 2/2 WAY WATER T30 (ACL)	
22	00054048	ELECTOVALVE FLANGE 3 WAY (ACL) 2.0 MM	
	00100147.001	OPERATOR KIT 3/2 WAY WATER T30 (ACL)	
	00100149.001	PLUNGER 3/2 WAY WATER T30 (ACL)	
23	00018869	SPIRAL HOSE 210 MML = 210 MM	
24	00004125	THREADED FITTING D. G 1/8	
25	00019568	THREADED NIPPLE G1/4 - G 1/8	
26	00028926	VALVE BLOCK ASSAY. WITH BYPASS	
	00028928	VALVE BLOCK ASSAY.	
27	00031136	ADJUSTABLE L WITH COMPRESSION CONNECTORG 1/8 X D	
28	00028840	THREADED ELBOW, MALE D. 4 X G1/4	

K09430_01

Coffee boiler

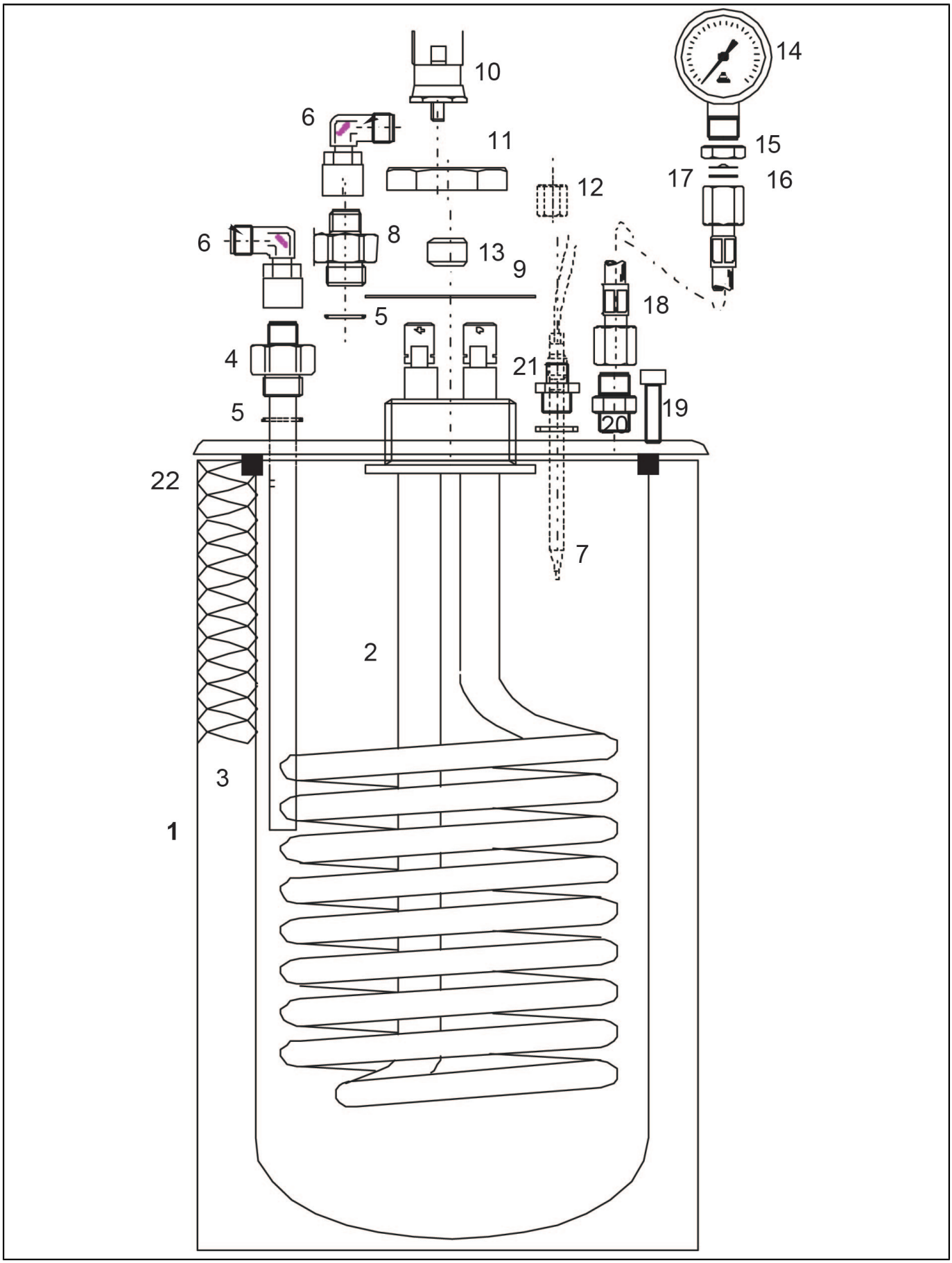

K09430_01

Coffee boiler

POS.	CODE	DESCRIPTION	NOTES
1	00018038	BOILER ASSAY. 1,6 L / 3,0 KW / 400 V	
	00031326	BOILER ASSAY. 1,6 L / 3,0 KW / 220V	
2	00018036	HEATING ELEMENT 3.0 KW / 400V / RED	
	00031327	HEATING ELEMENT 3.0 KW / 200V JAPAN	
3	00017827	BOILER INSULATION ASSAY. 1,6 L	
	00017828	Aluminium Jacket	
4	00018044	DOUBLE NIPPLED. G 1/4X G 3/8	
5	00002254	O-RING 17,17 X 1,78 EPDM 70SH	
6	00018843	ADJUSTABLE ELBOWG 1/4 X D. 8MM	
7	00010331	NIPPLE G 1/8 X 14	
8	00012200	DOUBLE NIPPLE D. G 1/4X G 3/8	
9	00002807	FLAT SEAL 34 X 26.5 X 1 BLUGARD	
10	00100300.001	TEMPERATURE LIMITER 140 C	
11	00012077	6-EDGE NUT M26 X 1,5 MM	
12	00009898	UNION NUT G 1/8	
13	00009900	GASKET BLIND ALBA D. 6.0 MM	
14	35002511	COFFEE BOILER MANOMETER D.40 0-25 BAR CL 1,6	
15	00009926	6-EDGE NUTG 1/4	
16	00004711	FLOW LIMITER D. 0,4 MM	
17	00002734	FLAT SEAL 11 X 7,5 X 1 KLINGERIT	
18	00012014	CONNECTION HOUSE ASSAY. L = 340 MM	
19	00000942	HEX SOCKET HEAD SCREW M6 X 25 MM	
20	00011313	DOUBLE NIPPLE D. G 1/4 X G1/4	
21	00032446	TEMP. SENSOR PT 100 2000 MML = 200 MM	
22	00002347	O-RING 98,02 X 3,53 EPDM 70SH	

K09470_01

Cappuccino foamer head

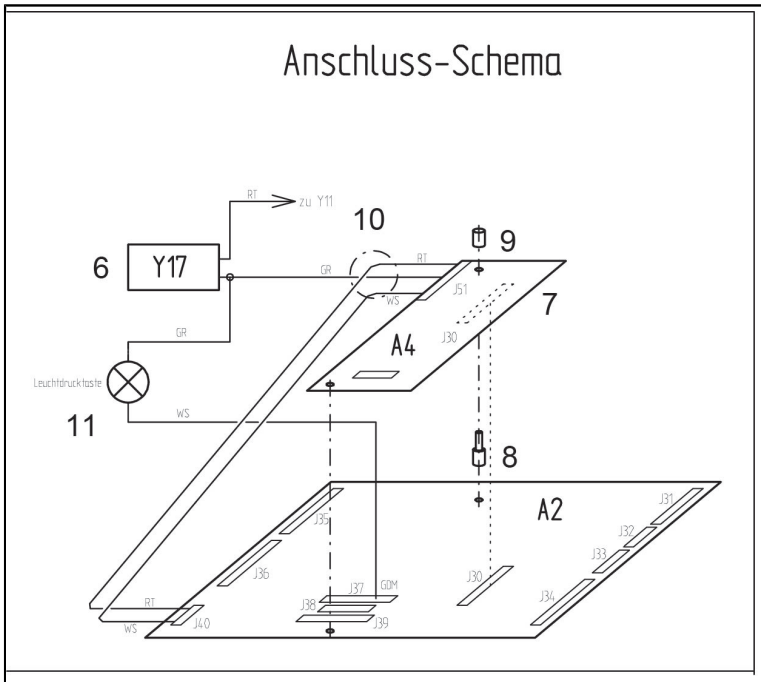

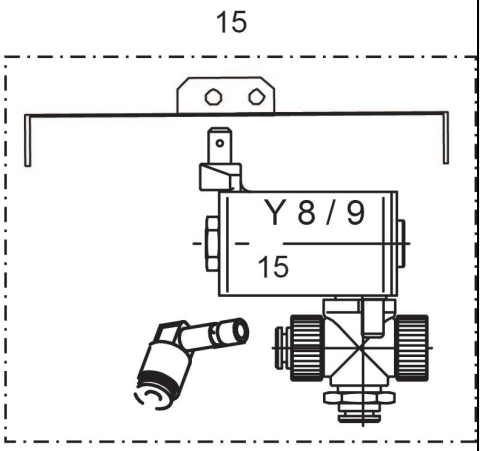

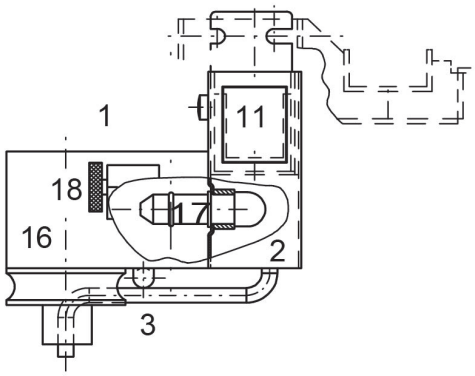

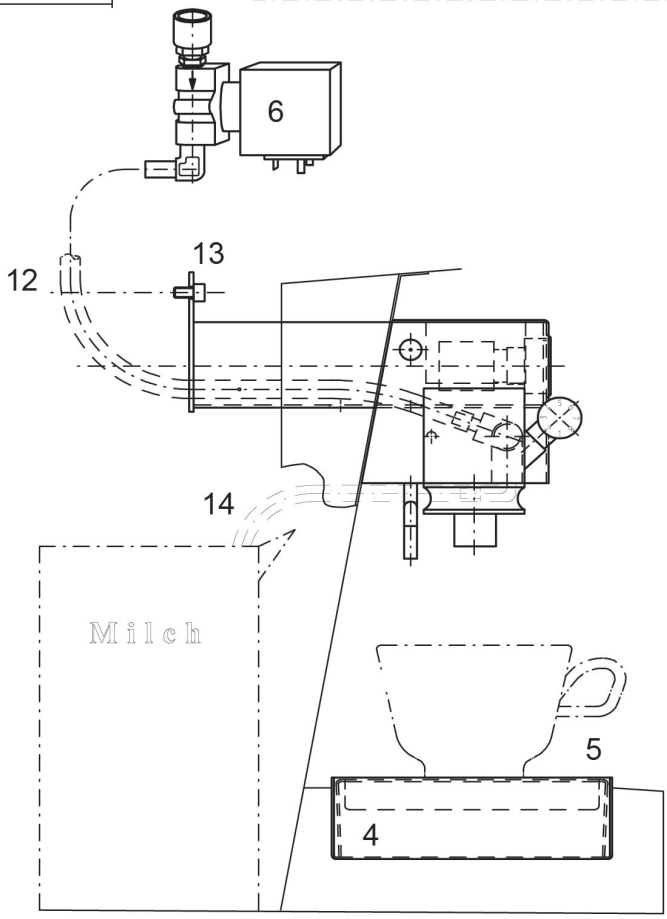

K09470_01

Cappuccino foamer head

POS.	CODE	DESCRIPTION	NOTES
1	00049016	CAPPUCCINO FOAMER ASSAY.	
	00052534	CAPPUCCINO , RETROFIT KIT MAUAL	
	00052811	CAPPUCCINO , RETROFIT KIT AUTOMATIC	
2	00050209	COVERWITH COFFEE LINE	
3	00039209	COFFEE LINE ASSAY.	
4	00050194	DRAIN TRAY	
5	00050176	GRID TO DRAIN TRAY	
6	00018863	STEAM VALVE ASSAY. Y 17	
	00100559.001	OPERATOR KIT 2/2 WAY WATER T30 (ACL)	
	00100560.001	PLUNGER 2/2 WAY WATER T30 (ACL)	
7	00019533	INTERFACE	
8	00019535	SPACERS M3 X 14,0 MM	
9	00001595	SPACERS M3 X 5 MM	
10	00039211	WIRING SET	
11	00018864	SWITCH WITH CABLE TO Y 17	
12	00027444	SILICON HOSED. 6,0 X 10 MM	
13	00001085	RAISED CHEESE HEAD SCREW M5 X 8 MM	
14	00004474	SILICON HOSE D. 8 X 5 MM	
15	00100322.001	ELECTROVALVE 3/2 WAYS 24V S90	
	00100344.001	RETROFIT KIT 1 SWITCHING VALVES	
	00100345.001	RETROFIT KIT 2 SWITCHING VALVES	
16	00027283	FOAMVALVE	
	00027315	GASKET KIT HEAD MILK	
17	00027288	STEAM NOZZLE	
	00100186.013	CIRCLIP	
18	00027287	AIR REGULATOR	
	00060507	CONNECTOR AIR REGULATOR	

K09390_01

Heated Cup rack

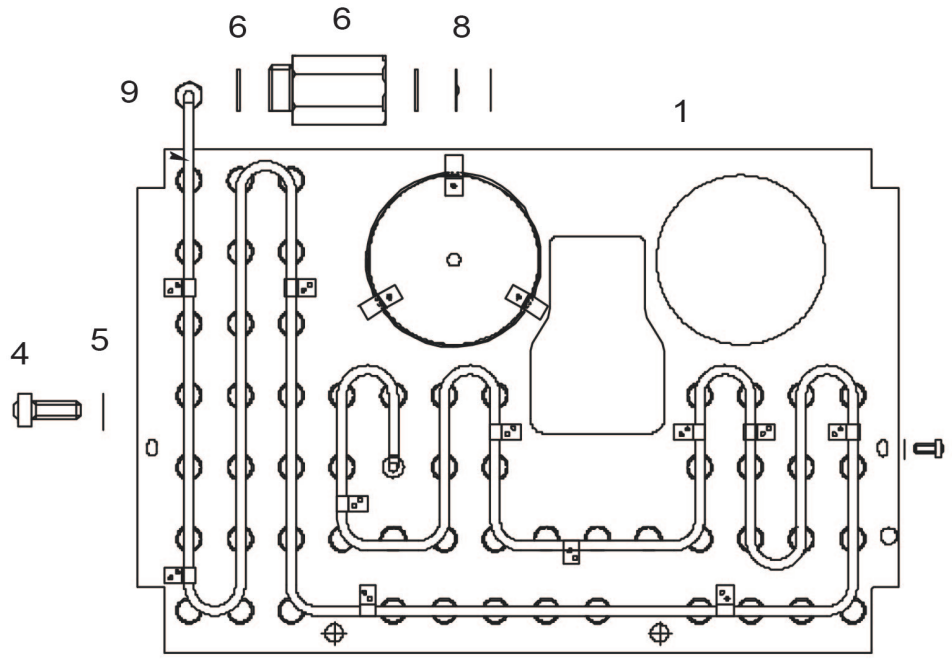

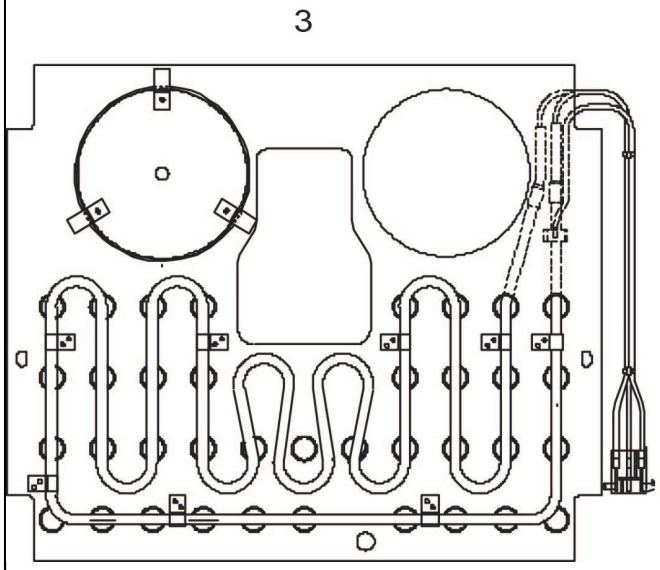

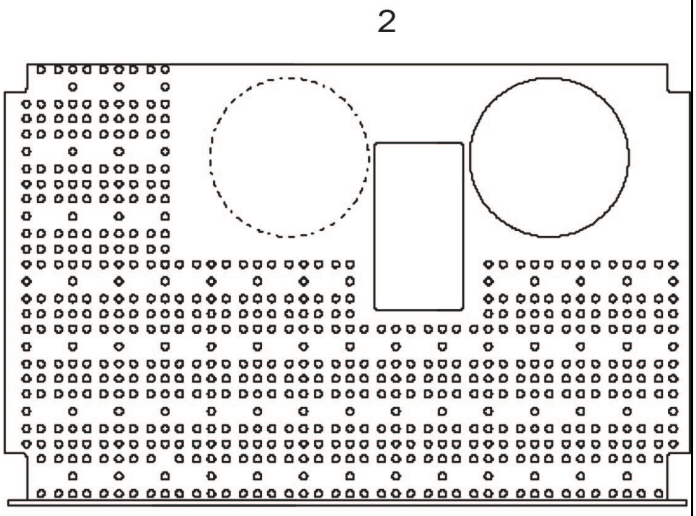

K09390_01

Heated Cup rack

POS.	CODE	DESCRIPTION	NOTES
1	00047102	CUP WARMER ASSAY. VT 480 DUO WITH COVER	
2	00018141	GRID 380 MM / 2 HOLES, HEATED CUP TRAY	
	00018142	GRID 480 MM / 1 HOLE, HEATED CUP TRAY	
	00018143	GRID 480 MM / 2 HOLES, DUO, HEATED CUP TRAY	
	00018148	GRID 380 MM / 1 HOLE, HEATED CUP TRAY	
3	00018626	HEATING ELEMENT 380MM / 60W / 220V (HEATED CUP TR	
	00028265	CUP WARMER TRAY ASSAY. 380 MM / 60 W / 230 V	
4	37030509	SCREW M5 X 10 TCB PH INOX	
5	00002733	FLAT SEAL 11 X 7,5 X 1 KLINGERIT	
6	00002734	FLAT SEAL 11 X 7,5 X 1 KLINGERIT	
8	00004711	FLOW LIMITER D. 0,4 MM	
9	00029160	HEATING COIL, CUP TRAY 480MM DUO	

K09500_01

Automatic dosing device

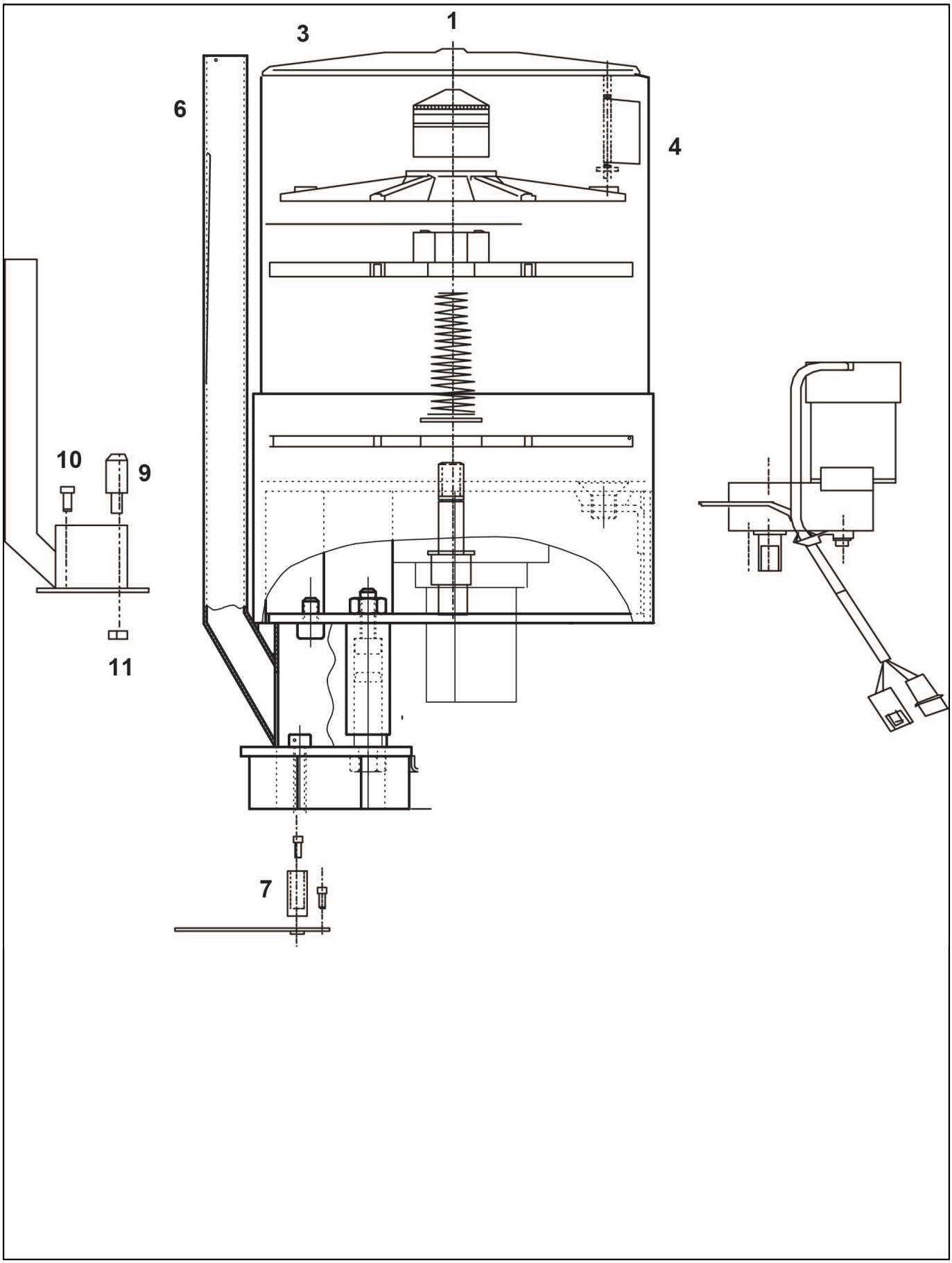

K09500_01

Automatic dosing device

POS.	CODE	DESCRIPTION	NOTES
1	00019827	RETROFIT KIT DOSING DEVISE 24V	
	00046307	AUT. DOSING DEVISE ASSAY.	
3	00004304	COVER	
4	00004315	METERING DEVICE BODY PLEXIGLAS	
6	00019006	PIPE ASSAY. AUTOMATIC DOSING DEVICE	
7	00011564	GUIDING SLEEVE, AUTOM. DOSING DEVICE	
9	00011565	GUIDING PIN	
10	00000928	HEX SOCKET HEAD SCREW M4 X10 MM	
11	00046288	6-EDGE NUT M6 X 0,5 MM	

K09470_02

Cappuccino foamer head

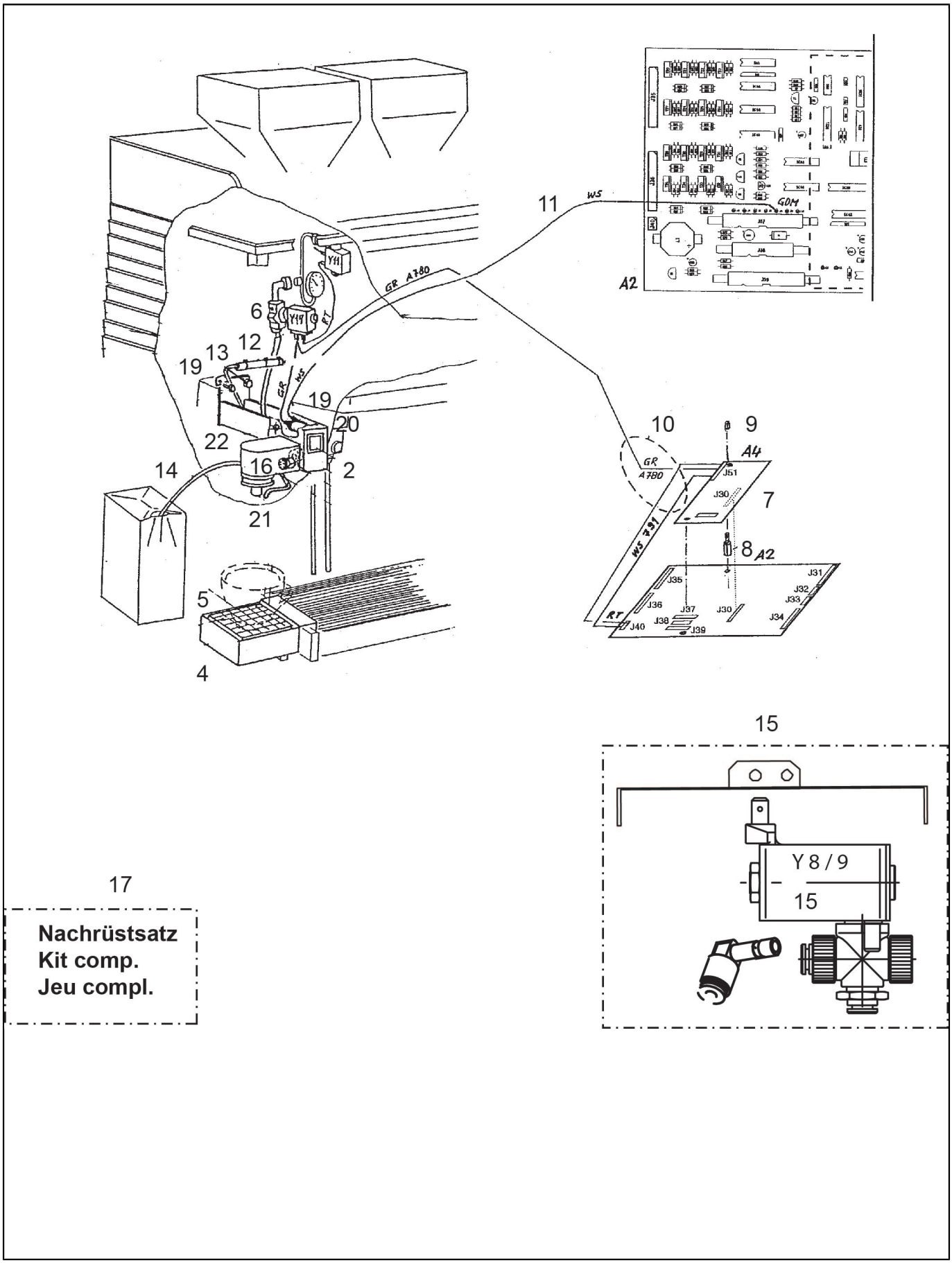

K09470_02

Cappuccino foamer head

POS.	CODE	DESCRIPTION	NOTES
2	00050209	COVERWITH COFFEE LINE	
4	00050194	DRAIN TRAY	
5	00050176	GRID TO DRAIN TRAY	
6	00018863	STEAM VALVE ASSAY. Y 17	
	00100559.001	OPERATOR KIT 2/2 WAY WATER T30 (ACL)	
	00100560.001	PLUNGER 2/2 WAY WATER T30 (ACL)	
7	00019533	INTERFACE	
8	00019535	SPACERS M3 X 14,0 MM	
9	00001595	SPACERS M3 X 5 MM	
10	00039211	WIRING SET	
11	00018864	SWITCH WITH CABLE TO Y 17	
12	00027444	SILICON HOSED. 6,0 X 10 MM	
13	00004476	HOSE UNISIL, BLACKD. 4,0 X 1,5 MM	
14	00004474	SILICON HOSE D. 8 X 5 MM	
15	00100322.001	ELECTROVALVE 3/2 WAYS 24V S90	
	00100344.001	RETROFIT KIT 1 SWITCHING VALVES	
	00100345.001	RETROFIT KIT 2 SWITCHING VALVES	
16	00027283	FOAMVALVE	
	00027315	GASKET KIT HEAD MILK	
	38228072	TEFLON HOSE FOP D. 4,0 X 2,5 MM	
17	00027283	FOAMVALVE	
	00039078	CAPPUCCINO , RETROFIT KIT	
	00039078	CAPPUCCINO , RETROFIT KIT	
	00052534	CAPPUCCINO , RETROFIT KIT MAUAL	
19	00018846	HEX SOCKET HEAD SCREW M5 X 8 MM	
20	00018837	SWITCH	
21	00038996	COFFEE LINE ASSAY.	
22	00001084	RAISED CHEESE HEAD SCREW M5 X 6 MM	

K10110_01

Coffee spouts assay.

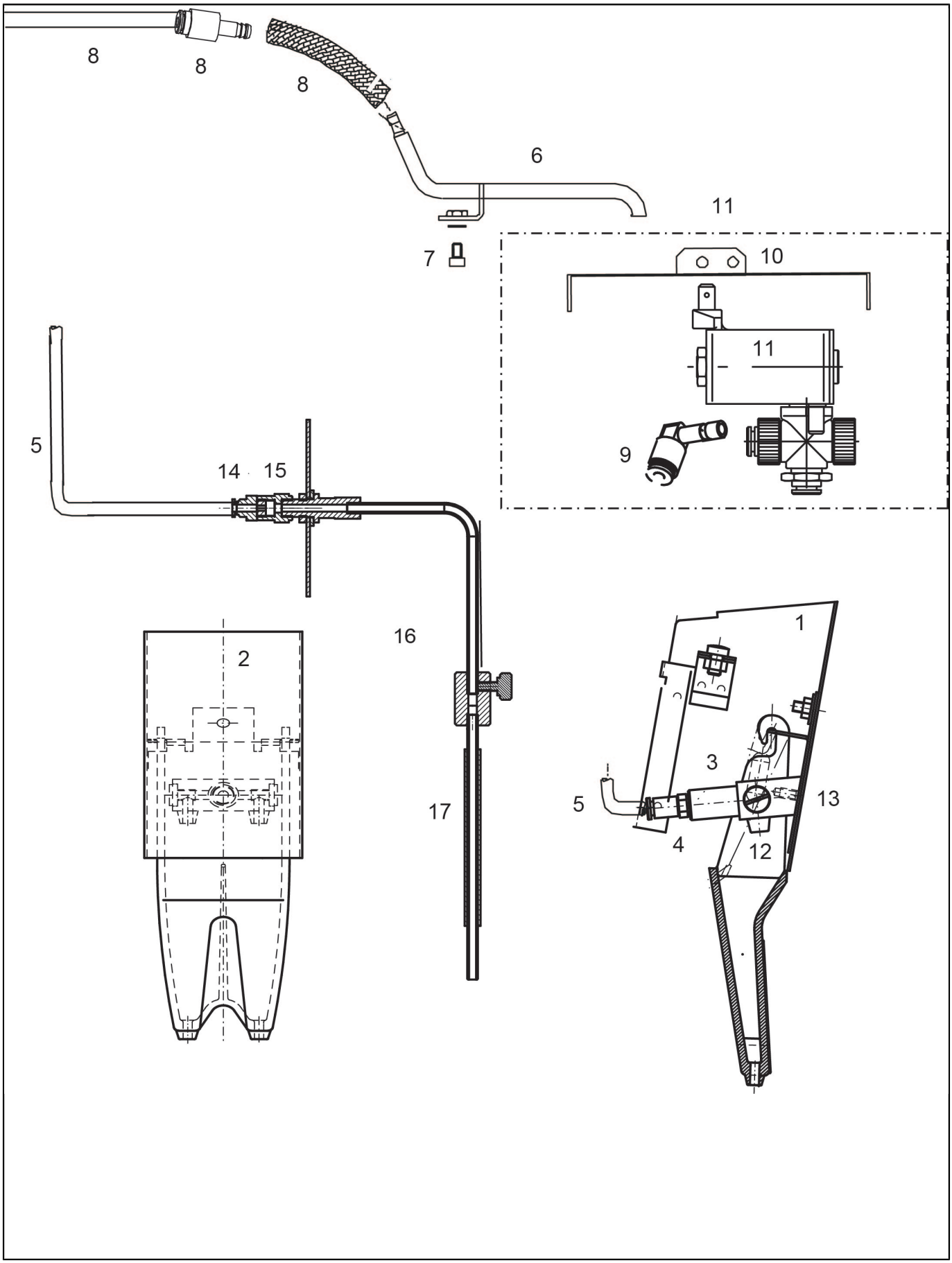

K10110_01

Coffee spouts assay.

POS.	CODE	DESCRIPTION	NOTES
1	00037520	COFFEE SPOUTS ASSAY.	
	00038144		
2	00026730	SWING SPOUT	
3	00053684	SPOUT HOLDER ASSAY.	
4	69200133	FAST STRAIGHT CONNECTOR M5	
5	38228072	TEFLON HOSE FOP D. 4,0 X 2,5 MM	
6	00018190	JUG SPOUT	
	00053247	JUG SPOUT RETROFIT KIT	
7	00018846	HEX SOCKET HEAD SCREW M5 X 8 MM	
8	00004476	HOSE UNISIL, BLACKD. 4,0 X 1,5 MM	
	00004476	HOSE UNISIL, BLACKD. 4,0 X 1,5 MM	
	00060151	HOSE FITTING TEFLON - SILIKON	
9	00060076	PLUG IN ELBOW CONNECTOR 6X4	
10	00100316.001	MOUNTING PLATE	
11	00100322.001	ELECTROVALVE 3/2 WAYS 24V S90	
	00100344.001	RETROFIT KIT 1 SWITCHING VALVES	
	00100345.001	RETROFIT KIT 2 SWITCHING VALVES	
	69200174	MEMBRANA DI SEPARAZIONE FKM ELV MAGMA	
12	00011565	GUIDING PIN	
13	00000931	HEX SOCKET HEAD SCREW M4 X 40 MM	
14	69200134	FAST STRAIGHT CONNECTOR G1/8 X 4	
15	69200139	ELBOW CONNECTOR G1/8x4 PPSU	
16	00010356	KNURLED THUMB SCREW	
17	00004474	SILICON HOSE D. 8 X 5 MM	

K11175_01

Water pump

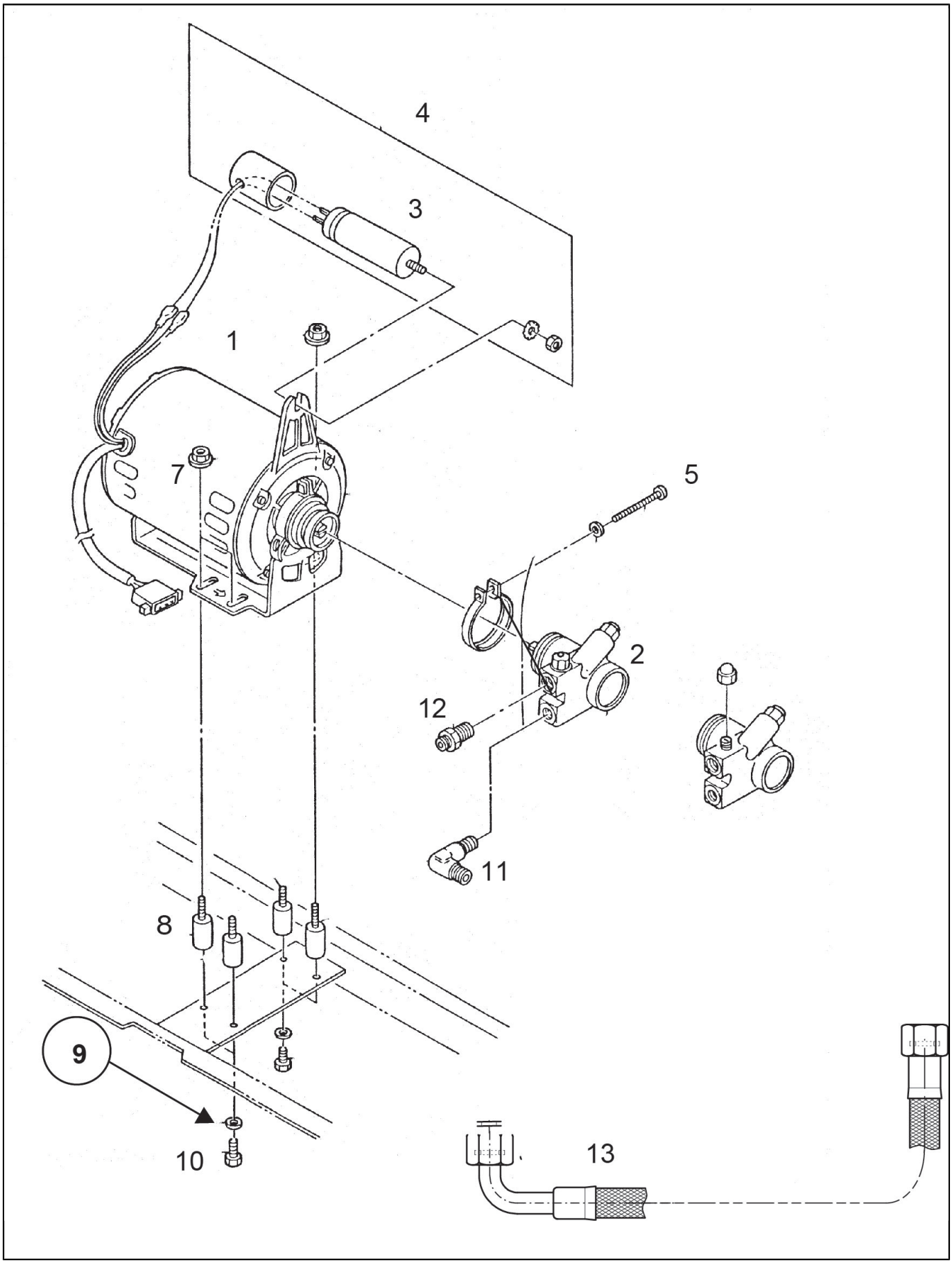

K11175_01

Water pump

POS.	CODE	DESCRIPTION	NOTES
1	00011528	PUMP MOTOR ASSAY. 230 V	
2	00004236	WATER PUMP	
3	34020003	CONDENSER 10 MF.	
4	00003442	CAPACITOR ASSAY.	
5	00000937	HEX SOCKET HEAD SCREW M6 X 10 MM	
7	00001522	KEPS NUT M6	
8	00004013	RUBBER BUFFER	
9	00002068	SPRING WASHER M6	
10	00001168	COUNTERSUNK SCREW M3 X 25 MM	
11	00041493	THREADED MALE NIPPLE D. R 3/8 X G 1/4	
12	00019152	HOSE NIPPLE 12.0MM / G 3/8	
13	00100248.002	REINFORCED HOSE G 3/8 X 1500MML = 150 MM	

K09444_01

Level control unit with valve block

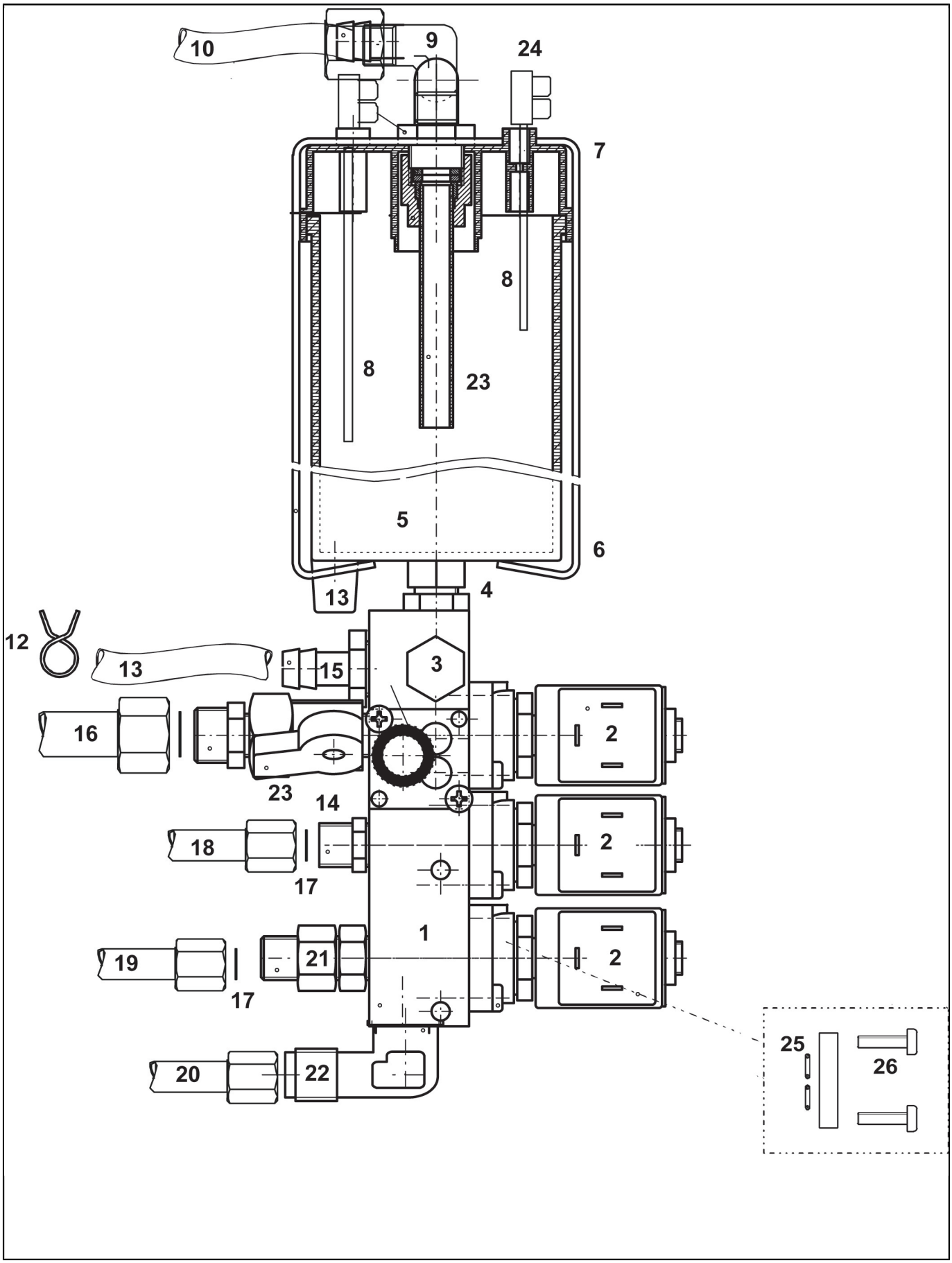

K09444_01

Level control unit with valve block

POS.	CODE	DESCRIPTION	NOTES
1	00018927	VALVE BLOCK ASSAY.	
	00037079	VALVE BLOCK ASSAY.	
2	00020082	PLUNGER 2/2 WAY WATER (ODE) T30	
	00054361	OPERATOR KIT 2/2 WAYS WATER (ODE)	
	00100559.001	OPERATOR KIT 2/2 WAY WATER T30 (ACL)	
	00100560.001	PLUNGER 2/2 WAY WATER T30 (ACL)	
3	23000289	CLOSING PIN G1/4	
4	00002218	O-RING 10,77 X 2,62 EPDM 70SH	
	00032819	THREADED MALE NIPPLE	
5	00018269	STORAGE TANK ASSAY. 20.00MM OUTSIDE	
6	00018335	BRACKET, INLET UNIT	
7	00018269	STORAGE TANK ASSAY. 20.00MM OUTSIDE	
8	00033013	ROUND STEEL 2.5 X 83MM (SENSOR)	
	00033014	ROUND STEEL 2.5 X 117MM (SENSOR)	
9	00004111	THREADED MALE ELBOW D. 3/8 X G 1/4	
10	00004475	SILICON HOSE D. 12 X 8 MM	
	00012002	Hex Nut	
	00030104	Hose Nipple D 11,5 X 30 Mm	
11	00044464	GASKET 16,5 X 13,2 X 1,5 COPPER	
12	00004492	HOSE CLAMP D. 10,0 MM	
13	00004473	SILICON HOSE D. 14 X 9 MM	
	00030257	CONNECTION HOUSE ASSAY.	
14	00011313	DOUBLE NIPPLE D. G 1/4 X G1/4	
15	00019152	HOSE NIPPLE 12.0MM / G 3/8	
16	69000737	FLEX PIPE MM1500 NSF F3/8-F3/8 CHECK VALVE	
17	00004713	FLOW LIMITER D. 0,6 MM	
	00054229	FLOW LIMITER D. 0,7 MM	
18	00030500	CONNECTION HOUSE ASSAY. L = 270 MM	
	00100817.001	REPLACMENT SET	
19	00100820.001		
20	00100821.001	TEFLON REPAIR KITL = 300 MM	
21	00028510	NON-RETURN VALVE ASSAY. G 1/4	
22	00004113	THREADED MALE ELBOW	
23	10705719	TAP+JOINT S90	
24	00003200	CLAMP 12 POL.	
25	36402001	O-RING 6,07 X 1,78 EPDM 105	
26	00001074	CROSSED RAISED CHEESE HEAD SCREW M4 X 10 MM	

K10242_01

Flowmeter and relief valve

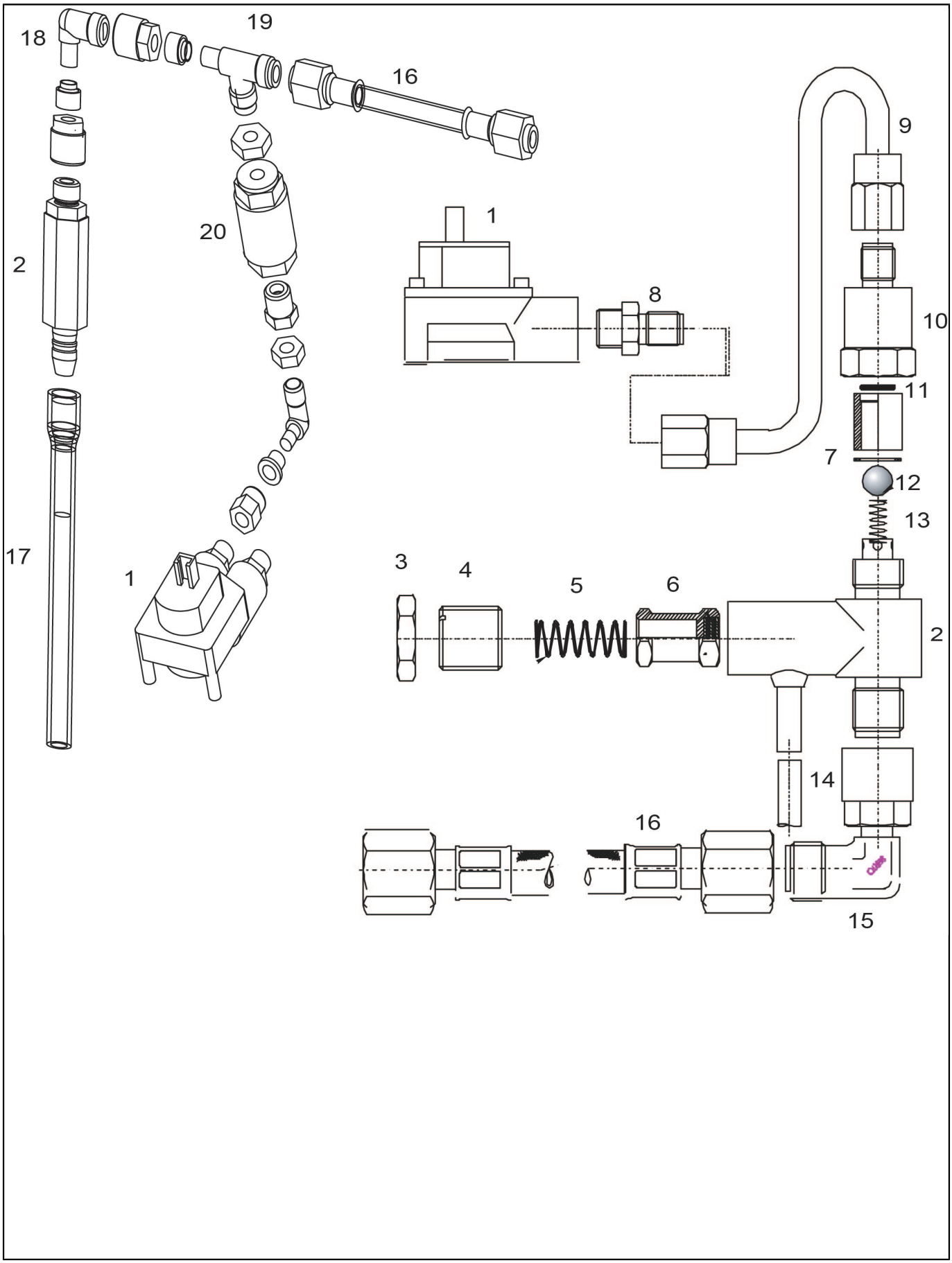

K10242_01

Flowmeter and relief valve

POS.	CODE	DESCRIPTION	NOTES
1	00035932	FLOWMETER ASSAY.	
2	10060605	PRESSURE RELIEF VALVE 12 X G1/4	
3	00030518	COUNTER NUT G 1 1/2	
4	00049135	SET OF PARTSEXPANSION VALVE	
5	00030519	SPRING SETTING SCREW	
6	00030516	PLUNGER ASSAY. EXPANSION VALVE	
	00030519	SPRING SETTING SCREW	
7	00009914	GASKET TAP RAPID COPPER	
8	00004115	THREADED MALE NIPPLED. 1/8 X G 1/8	
9	00018799	PIPE FLOWMETER - RELIEF VALVE	
10	00030514	THREADED FITTING	
11	36402001	O-RING 6,07 X 1,78 EPDM 105	
12	00030522	BALL D. 8,0 MM	
13	00030520	SPRING, NON-RETURN VALVE	
14	00004108	CONNECTOR NUT D. 6 MM X G 1/4	
15	00018843	ADJUSTABLE ELBOWG 1/4 X D. 8MM	
16	00100816.001	REPLACMENT SET	
17	00004475	SILICON HOSE D. 12 X 8 MM	
18	00018843	ADJUSTABLE ELBOWG 1/4 X D. 8MM	
19	00060490	ADJUSTABLE T WITH COMPRESSION CONNECTORG 1/4 X D	
20	00057681	CHECKVALVE	

K09770_01

Brewing group

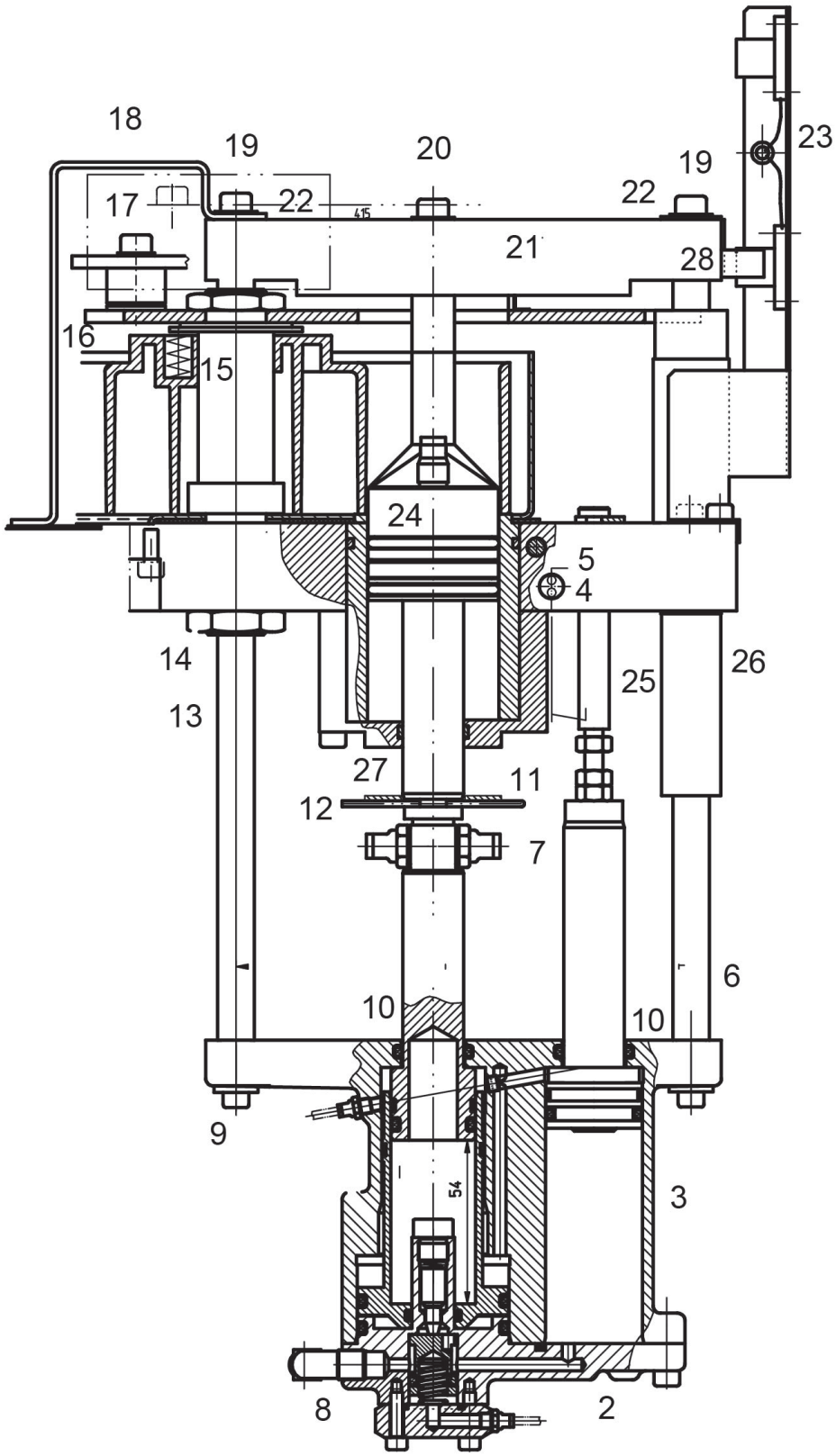

K09770_01

Brewing group

POS.	CODE	DESCRIPTION	NOTES
1	00038365	BREWING GROUP 43MM ASSAY. NEW	
2	00020061	COVERFROM BREWING GROUP, LOWER PART ASSAY.	
	00052915	COVERFROM BREWING GROUP, LOWER PART ASSAY. (REPLAC	
3	00031945	BREWING GROUP LOWER UNIT ASSAY.	
	00032205	GASKET KIT STARTING CYLINDER	
	00052916	BREWING GROUP LOWER UNIT ASSAY. (REPLACEMENT)	
4	00017201	HEATING CARTRIDGE ASSAY. 220W / 230V BREWING GROUP	
5	00019300	TEMPERATURE SENSOR PT 100 130 MM	
6	00017193	CONNECTION ROD ASSAY. BREWING GROUP 48MM	
7	69200134	FAST STRAIGHT CONNECTOR G1/8 X 4	
8	00004116	THREADED MALE NIPPLED. 1/8 X G 1/8	
9	00019507	HEX SOCKET HEAD SCREW M5 X 12 MM	
10	00017161	O-RING 20,22 X 3,53 NBR 70SH	
11	00017179	EXPANDER PIN	
12	00040249	WASHER	
13	00017196	GUIDING ROD	
14	00044614	6-Edge NutM 20 x 1,5 x 27 mm	
15	00017182	SPRING 28,0 X 8,0 X 1,0 MM	
16	00017091	WASHER 4,3 MM	
17	00000942	HEX SOCKET HEAD SCREW M6 X 25 MM	
	00002068	SPRING WASHER M6	
	00058371	BUSH GUIDE	
18	00028637	EJECTOR 43MM	
19	00000940	HEX SOCKET HEAD SCREW M6 X 18 MM	
20	00000943	HEX SOCKET HEAD SCREW M6 X 35 MM	
21	00017092	UPPERCROSSHEAD	
22	00001971	STRAIN WASHER M6	
23	00017192	HOLDER WITH OPTOSWITCH, BREWING GROUP	
24	00037170	PISTON ASSAY. D. 43 MM (TOP)	
25	00017093	CONNECTION ROD	
26	00017089	CONNECTION ROD	
27	00017143	GUIDING RING	
28	00017143	GUIDING RING	

K09770_02

Brewing group top part

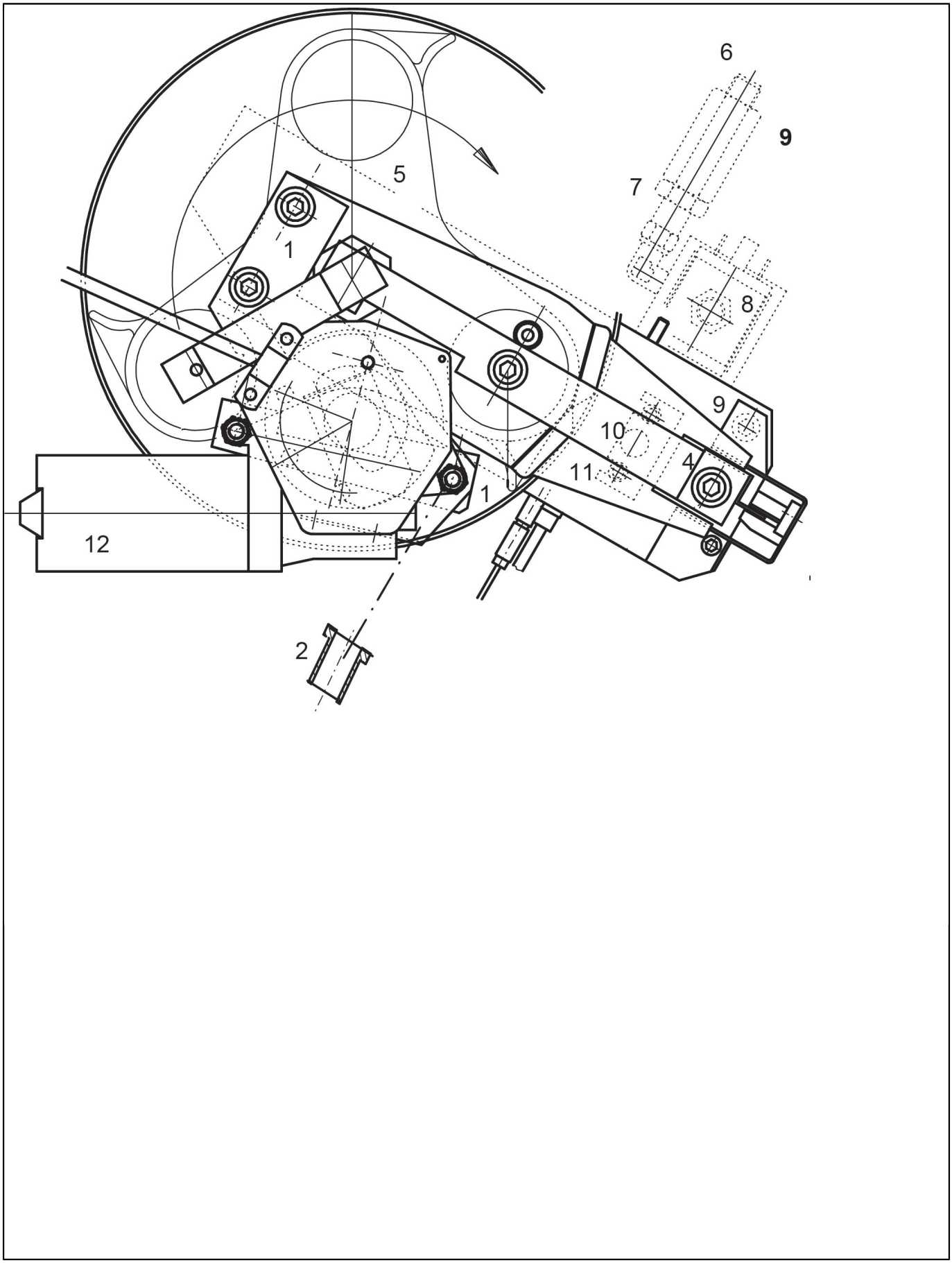

K09770_02

Brewing group top part

POS.	CODE	DESCRIPTION	NOTES
1	00000942	HEX SOCKET HEAD SCREW M6 X 25 MM	
	00002068	SPRING WASHER M6	
2	00058371	BUSH GUIDE	
4	00000940	HEX SOCKET HEAD SCREW M6 X 18 MM	
5	00030726	ROTOR	
6	00004724	SIEVE CONNECTION 32.0 X 13.50MM	
	00011029	WIRE NET FILTER ASSAY.	
7	00002250	O-RING 15,6 X 1,78 EPDM 70SH	
8	00020062	PLUNGER 3/2 WAY WATER (ODE) T30	
	00054048	ELECTOVALVE FLANGE 3 WAY (ACL) 2.0 MM	
	00100147.001	OPERATOR KIT 3/2 WAY WATER T30 (ACL)	
	00100149.001	PLUNGER 3/2 WAY WATER T30 (ACL)	
9	00000932	HEX SOCKET HEAD SCREW M5 X 12 MM	
10	00017118	RETAINING PLATE	
11	00000932	HEX SOCKET HEAD SCREW M5 X 12 MM	
12	00017190	MOTOR DRIVE ASSAY. (REPLACEMENT) BREWING GROUP D.	

K09770_03,

Brewing group hydraulic

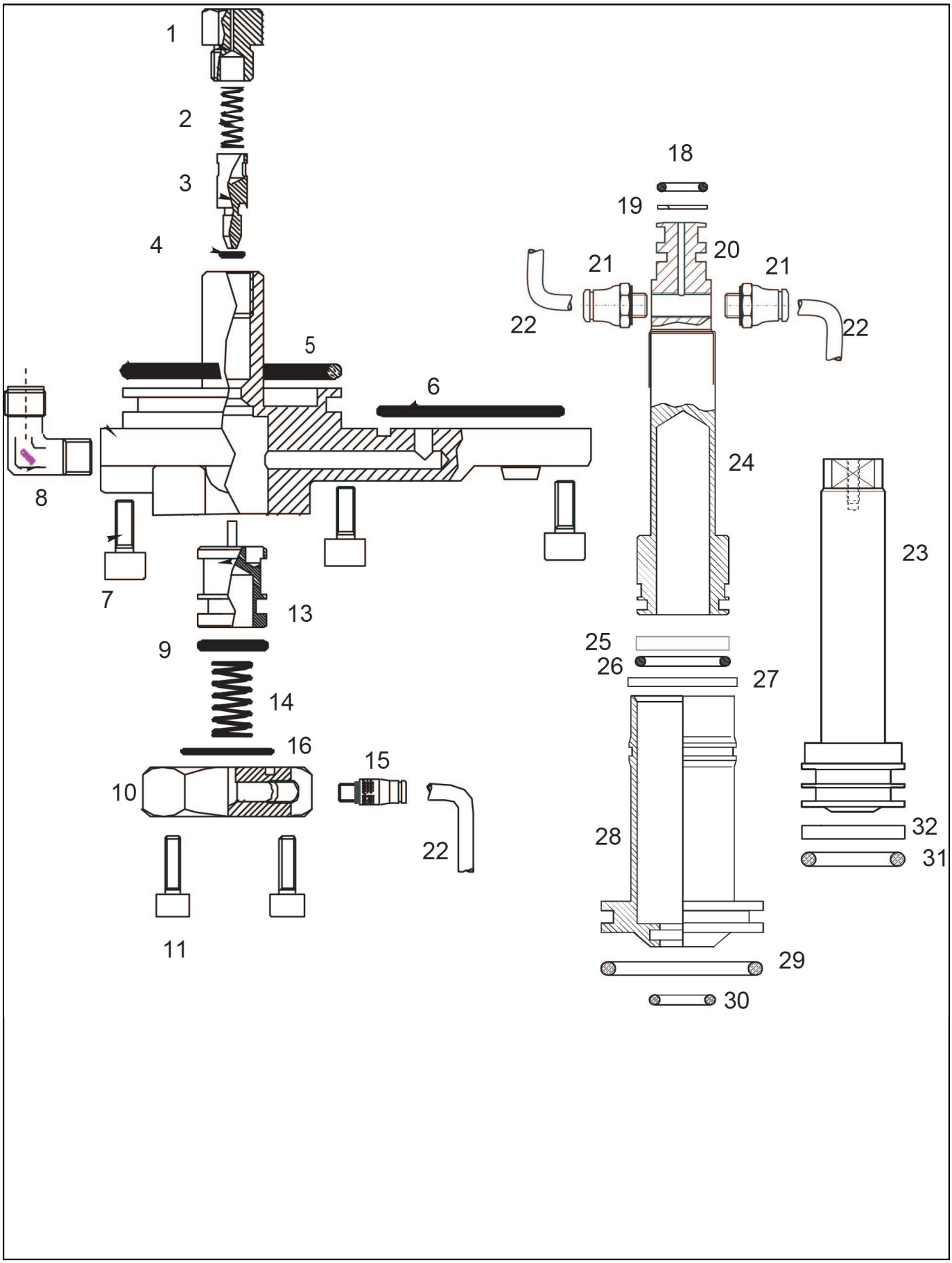

K09770_03,

Brewing group hydraulic

POS.	CODE	DESCRIPTION	NOTES
1	00017119	SOLENOID VALVE BODY 1 VT BREWING GROUP LOWER PART	
2	00028507	SPRING D. 1,25 X 8,0 X 22,0 MM	
3	00028508	VALVE CONE	
4	00017166	O-RING 2,9 X 1,78 NBR 90SH	
5	00017165	O-RING 44,05 X 3,53 NBR 70SH	
6	00017164	O-RING 32,99 X 2,62 NBR 70SH	
7	00000934	HEX SOCKET HEAD SCREW M5 X 20 MM	
	00032449	CABLE HARNESS OUTPUT 4	
8	00004116	THREADED MALE NIPPLED. 1/8 X G 1/8	
	00019477	CABLE HARNESS OUTPUT 1	
9	00017158	O-RING 10,77 X 2,62 NBR 70SH	
	00029308	MAIN ELECTRIC SUPPLY TERMINAL	
	00036500	CONNECTION CABLE ASSAY.	
	34200318	RELAY S90 200-240V	
10	00001520	6-EDGE NUT SELF LOCKING M5	
	00031137	COVER	
11	00000935	HEX SOCKET HEAD SCREW M5 X 30 MM	
	00017189	HEX SOCKET HEAD SCREW M4 X 6 MM	
13	00017197	DRIVE PISTON BREWING GROUP	
14	00017181	SPRING D. 1,25 X 8,0 X 22,0 MM	
15	69200133	FAST STRAIGHT CONNECTOR M5	
16	00002254	O-RING 17,17 X 1,78 EPDM 70SH	
18	00002212	O-RING 9,2 X 2,62 EPDM 70SH	
19	00017139	SUPPORT RING D. 10.4/14.0 X 1.4MM	
20	00002207	O-RING 8 X 1 EPDM	
21	69200134	FAST STRAIGHT CONNECTOR G1/8 X 4	
22	38228072	TEFLON HOSE FOP D. 4,0 X 2,5 MM	
23	00017198	PISTON ROD 1/32.0MM, DOUBLE PISTON	
24	00017199	PISTON ROD 2/28.0MM, DOUBLE PISTON	
25	00017140	GUIDING RING	
26	00017162	O-RING 21,82 X 3,53 NBR 70SH	
27	00017142	GUIDING RING	
28	00060895	DOUBLE PLUNGER BUSHING WITH GUIDING RING	
29	00017165	O-RING 44,05 X 3,53 NBR 70SH	
30	00017159	O-RING 13,94 X 2,62 NBR 70SH	
31	00017163	O-RING 25 X 3,53 NBR 70SH	
32	00017141	GUIDING RING 3./1.55 X 93MM	

K10105_01

Brewing piston

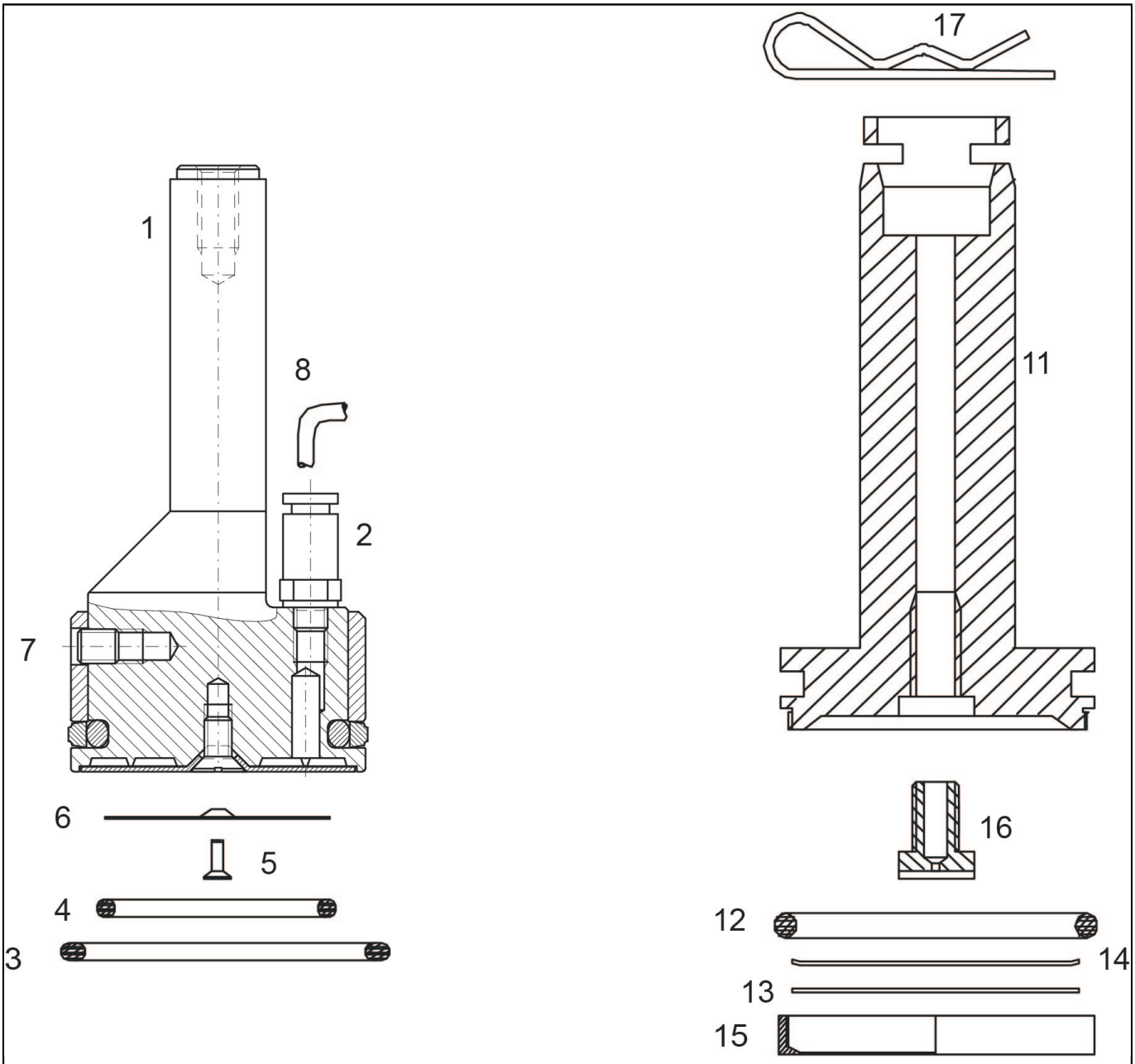

K10105_01

Brewing piston

POS.	CODE	DESCRIPTION	NOTES
1	00037170	PISTON ASSAY. D. 43 MM (TOP)	
2	69200133	FAST STRAIGHT CONNECTOR M5	
3	00036441	TURCON RING 32 X 43,3 X 4	
4	00032186	O-RING 31,35 X 3,53 V 75SH	
5	00001172	COUNTERSUNK SCREW M4 X 8 MM	
6	00060116	BREWING SIEVE D. 44 MM	
7	00001729	HEX-SOCKET SET SCREW M5 X 6 MM	
8	38228073	TEFLON HOSE FOP D. 6 X 4 MM	
11	00028842	BREWING PISTON ASSAY. D. 43MM	
12	00002308	O-RING 36,09 X 3,53 F 75SH	
13	00033168	FEIN SIEVE D. 43 MM	
14	00028631	SUPPORTING SIEVE D. 38.5 MM	
15	00028627	SPECIAL NUT	
16	00037998	FLOW LIMITERD. 0,7 MM	
	00037999	FLOW LIMITERD. 1,0 MM	
17	00017179	EXPANDER PIN	

K09160_01

Steam boiler

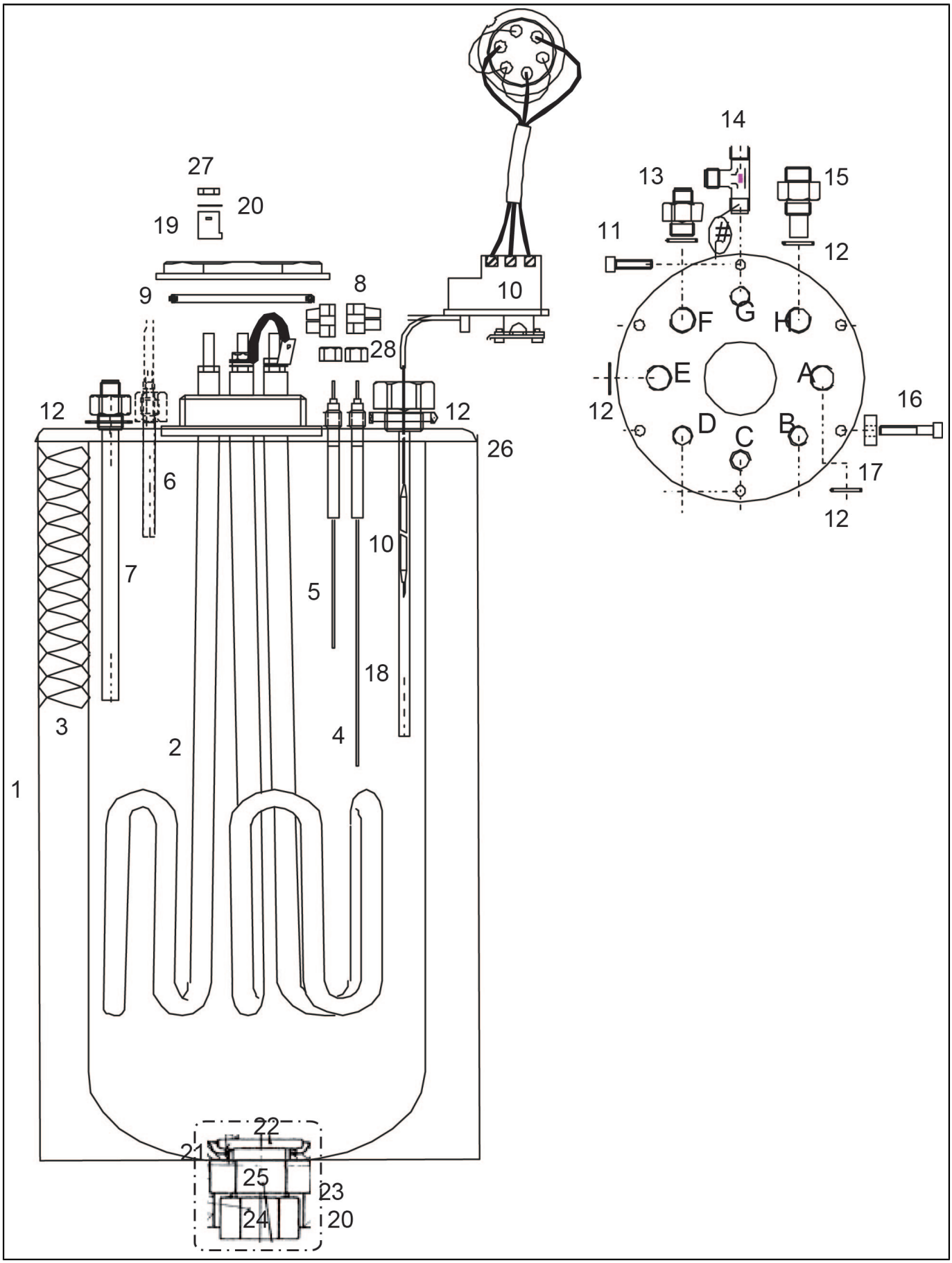

K09160_01

Steam boiler

POS.	CODE	DESCRIPTION	NOTES
1	00017791	BOILER 4 L / 4,0 KW / 200/400 V JAPAN	
	00031330	BOILER 4 L / 4,0 KW / 230/400 V	
2	00012810	HEATING ELEMENT 4.0 KW / 3 X 200 V (JAPAN)	
	00012811	HEATING ELEMENT 4.0 KW / 3 X 240 V	
3	00012815	Insulating Bottom Boiler 4,0 L /4,0 Kw	
	00017792	Safety Jacket 4,0 L / 4,0 Kw Boiler	
4	00017795	LEVEL SENSOR ASSAY. 205 MM L = 205 MM	
5	00017796	LEVEL SENSOR ASSAY. 118 MM L = 118 MM	
6	00032446	TEMP. SENSOR PT 100 2000 MML = 200 MM	
7	00012206	DOUBLE NIPPLE D. G 1/4X G 3/8	
8	00003200	CLAMP 12 POL.	
9	00030622	TEFLONRING 47,22 X 3,53 MM	
10	00043629	OVER TEMPERATURE SAFETY DEVICE 175 C	
11	00000942	HEX SOCKET HEAD SCREW M6 X 25 MM	
12	00002254	O-RING 17,17 X 1,78 EPDM 70SH	
13	00012200	DOUBLE NIPPLE D. G 1/4X G 3/8	
14	00004118	THREADED INSERT MALE T 3 X G 1/4	
15	00012803	DOUBLE NIPPLEG 3/8	
16	00000943	HEX SOCKET HEAD SCREW M6 X 35 MM	
17	00018270	SPACER SHEATH COVER STEAM BOILER	
18	00037892	JACKET PIPE TO TEMP. SENSER	
19	34160024	LAMELLAR CONTACT	
20	00017719	WASHER	
21	00019824	GASKET 22 X 16,6 X 1,5 COPPER	
22	00017798	SPECIAL NIPPLE BOILER 4L	
23	00002737	FLAT SEAL 14,7 X 9 X 1	
24	00017797	SEALING CAP G 3/8	
25	00009925	HEX NUT G 3/8"	
26	00002350	O-RING 129,77 X 3,53 EPDM 70SH	
27	00001446	6-EDGE NUT M4 X 0,8 MM	
28	00009898	UNION NUT G 1/8	

K09160_02

Steam boiler

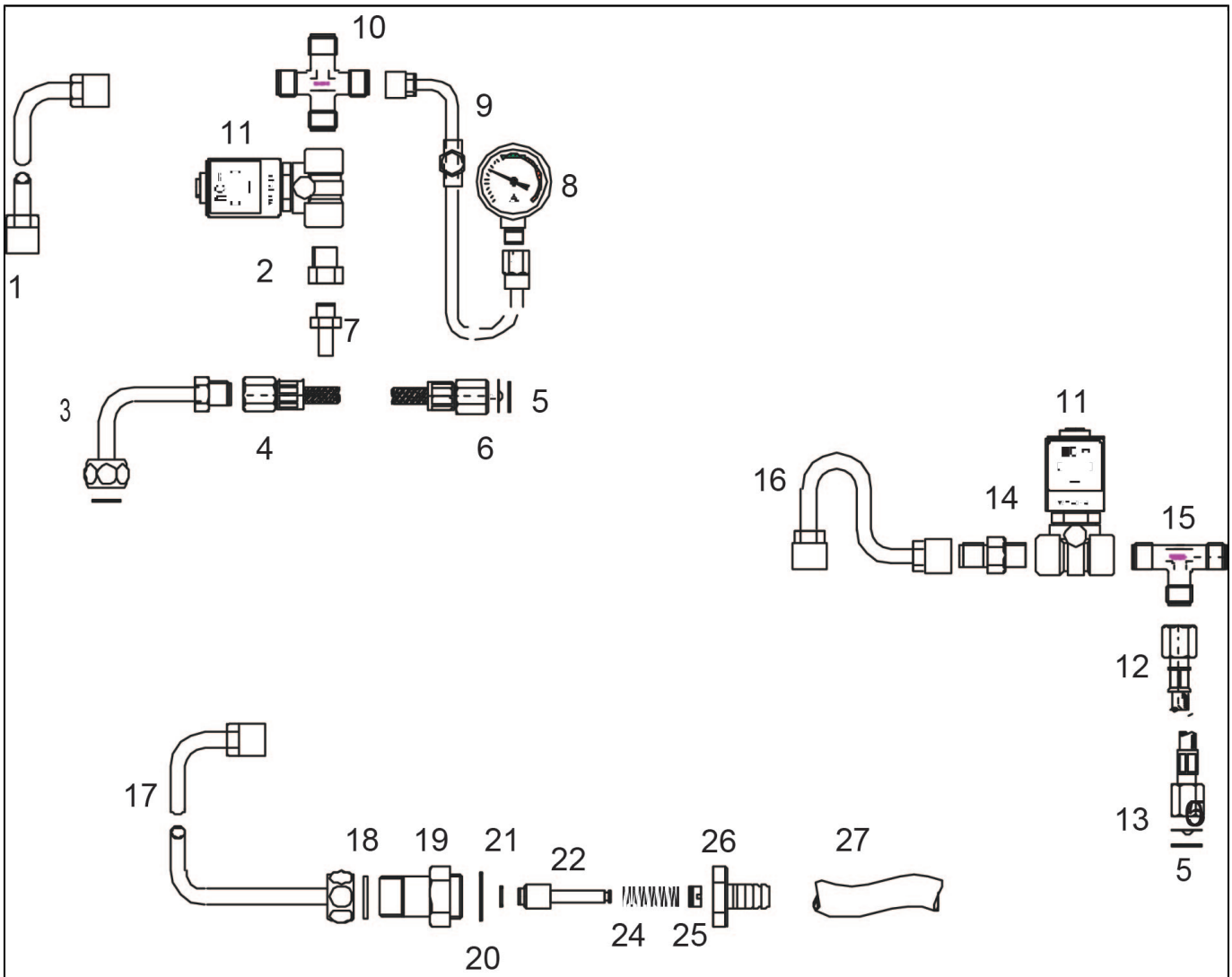

K09160_02

Steam boiler

POS.	CODE	DESCRIPTION	NOTES
1	00029335	PIPE STEAM BOILER - Y1	
2	00019568	THREADED NIPPLE G1/4 - G 1/8	
3	00018804	STEAM BOILER, SUPPLY PIPE	
4	00100820.001		
5	00004714	FLOW LIMITER D. 0,7 MM	
6	00002734	FLAT SEAL 11 X 7,5 X 1 KLINGERIT	
7	00004124	CONNECTION CONICG 1/8 X D. 6MM	
8	00100236.001	PRESSURE GAUGE 4 BAR	
9	00029337	PIPE STEAM BOILER, PRESSURE GAUGE	
10	00028822	SPIDER BODY 4 X G 1/4	
11	00100147.001	OPERATOR KIT 3/2 WAY WATER T30 (ACL)	
	00100149.001	PLUNGER 3/2 WAY WATER T30 (ACL)	
	34040183	ELECTROVALVE 2/2 WAYS T30 24V SIRAI	
12	00100816.001	REPLACMENT SET	
13	00004713	FLOW LIMITER D. 0,6 MM	
14	00011313	DOUBLE NIPPLE D. G 1/4 X G1/4	
15	00004118	THREADED INSERT MALE T 3 X G 1/4	
16	00018803	PIPE STEAM BOILER - Y2 (HOT WATER)	
17	00029334	PIPE STEM BOILER - RELIEF VALVE	
18	00002752	FLAT SEAL 18 X 13,5 X 2	
	00002752	FLAT SEAL 18 X 13,5 X 2	
19	00012460	VALVE CAP	
	00012660	RELIEF VALVE ASSAY.	
20	00002268	O-RING 21,95 X 1,78 PRP	
	00002268	O-RING 21,95 X 1,78 PRP	
21	36402001	O-RING 6,07 X 1,78 EPDM 105	
22	00010081	VALVE ROD	
24	00004633	SPRING 1,0 X 8,7 X 27,0 MM/12,5	
25	00010599	REGULATING SCREW	
26	00012460	VALVE CAP	
27	00004473	SILICON HOSE D. 14 X 9 MM	

K09399_01

Valve block 1

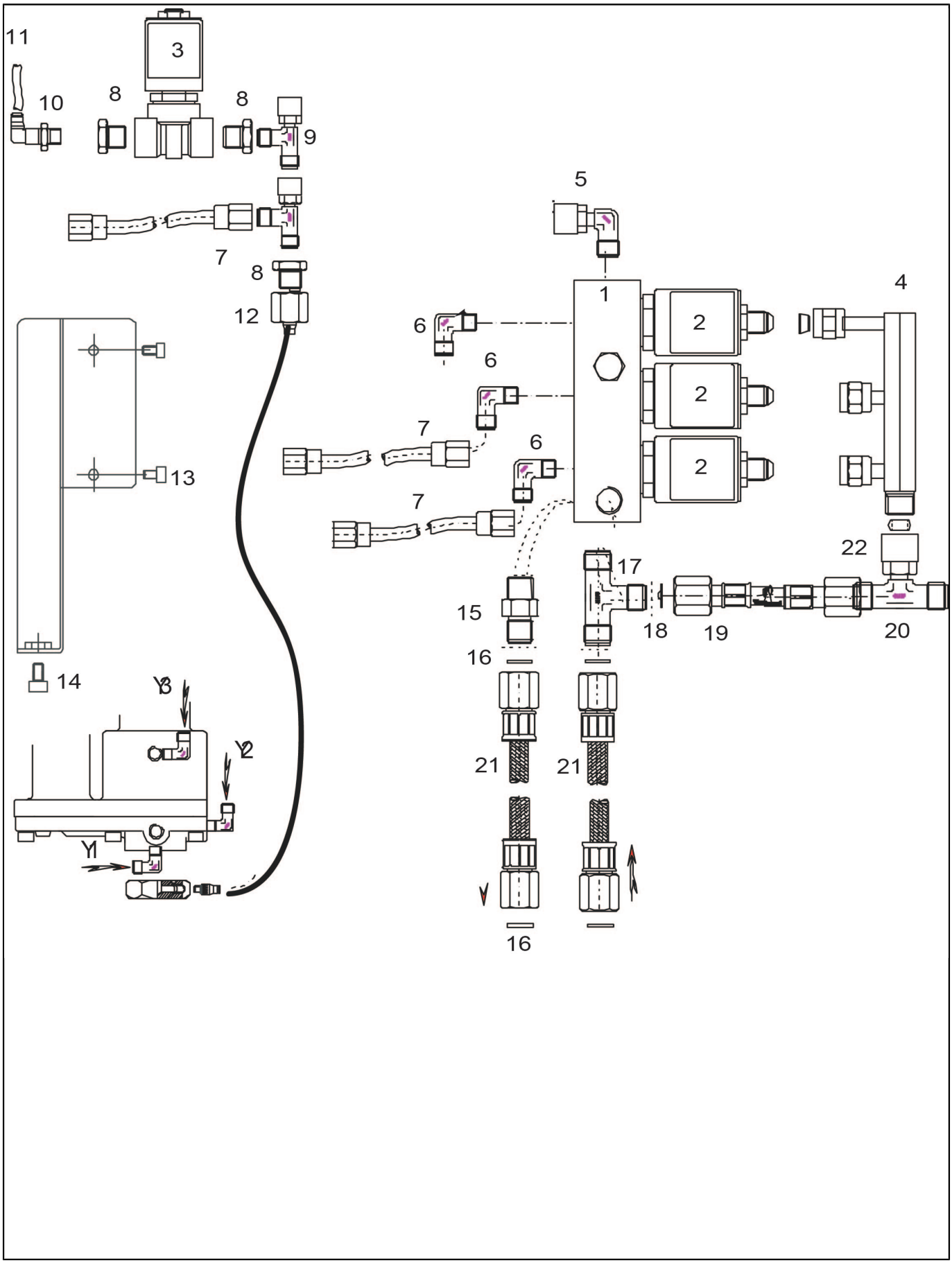

K09399_01

Valve block 1

POS.	CODE	DESCRIPTION	NOTES
1	00054052	VALVE BLOCK ASSAY.	
2	00020062	PLUNGER 3/2 WAY WATER (ODE) T30	
3	00100147.001	OPERATOR KIT 3/2 WAY WATER T30 (ACL)	
	00100149.001	PLUNGER 3/2 WAY WATER T30 (ACL)	
	00100558.001	ELECTROVALVE 2/2 WAY WATER T30 (ACL)	
	00100559.001	OPERATOR KIT 2/2 WAY WATER T30 (ACL)	
	00100560.001	PLUNGER 2/2 WAY WATER T30 (ACL)	
4	00027246	COLLECTOR LINE	
5	00004125	THREADED FITTING D. G 1/8	
6	00004116	THREADED MALE NIPPLED. 1/8 X G 1/8	
7	00018869	SPIRAL HOSE 210 MML = 210 MM	
8	00019568	THREADED NIPPLE G1/4 - G 1/8	
9	00031136	ADJUSTABLE L WITH COMPRESSION CONNECTORG 1/8 X D	
10	00028840	THREADED ELBOW, MALE D. 4 X G1/4	
11	38228072	TEFLON HOSE FOP D. 4,0 X 2,5 MM	
12	00029221	SCREWS ON CLOWN, STRAIGHT D. 4 X G1/4	
13	00017189	HEX SOCKET HEAD SCREW M4 X 6 MM	
14	00018846	HEX SOCKET HEAD SCREW M5 X 8 MM	
15	00011313	DOUBLE NIPPLE D. G 1/4 X G1/4	
16	00010488	GASKET 11,2 X 6,2 X 2 COPPER	
17	00004118	THREADED INSERT MALE T 3 X G 1/4	
18	00004714	FLOW LIMITER D. 0,7 MM	
19	00100821.001	TEFLON REPAIR KITL = 300 MM	
20	00055924	ADJUSTABLE L WITH COMPRESSION CONNECTORG 1/4 X D	
21	00100821.001	TEFLON REPAIR KITL = 300 MM	
22	00004104	CLAMPING RING SO 1-8 8 MM	
	00004105	CONNECTOR NUT D. 8 MM X G 1/4	

K09302_01

Hot Water spout

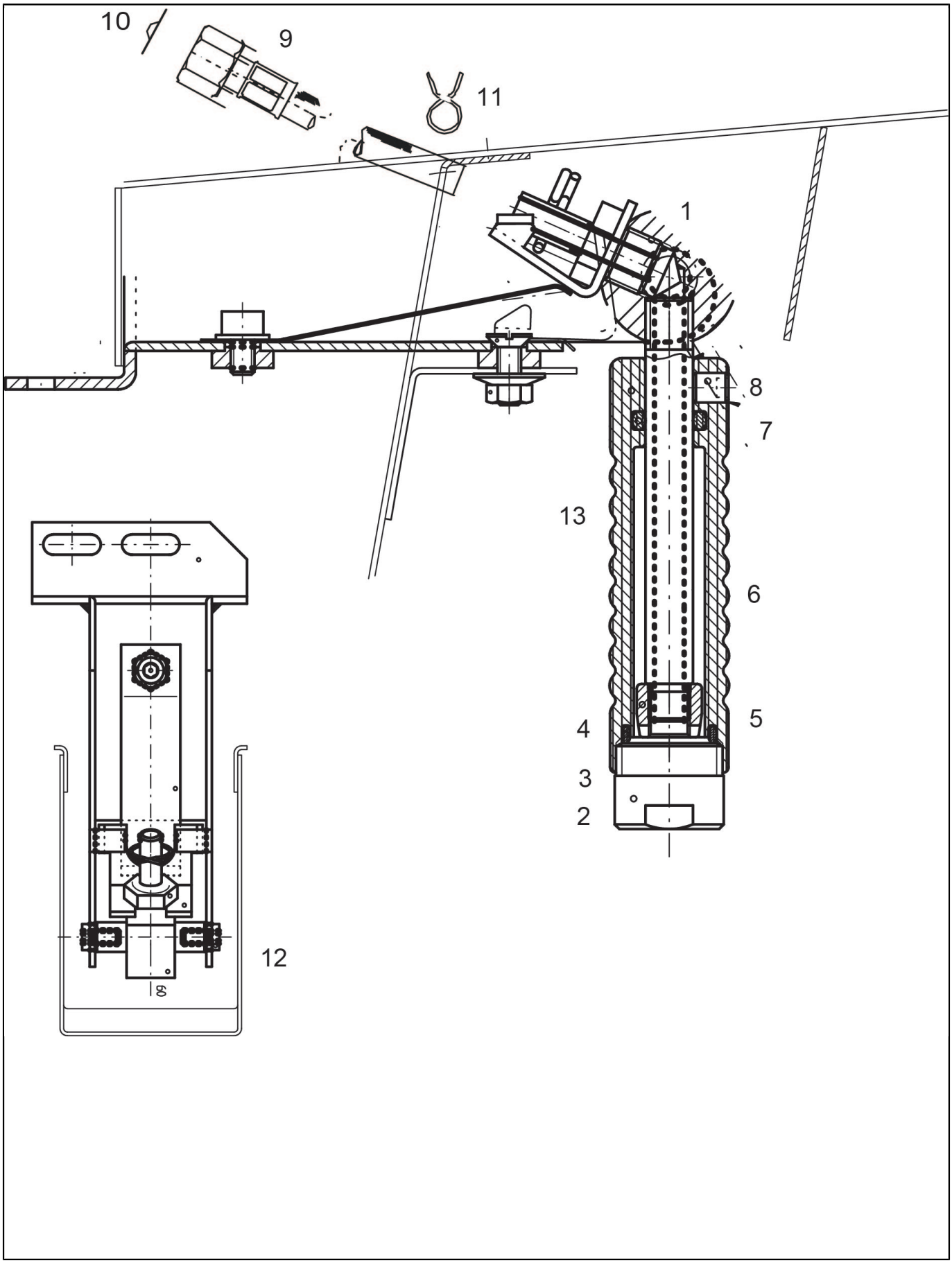

K09302_01

Hot Water spout

POS.	CODE	DESCRIPTION	NOTES
1	00051694	HOT WATER OUTLET ASSAY.	
2	00005295	NEOPERL MIXING NOZZLE G 3/8	
3	00005295	NEOPERL MIXING NOZZLE G 3/8	
4	00002240	O-RING 14 X 1,78 EPDM 70SH	
5	00012822	NUTM7 X 0,75 MM	
6	00002195	O-RING 5 X 1 EPDM 70SH	
7	00002205	O-RING 7,59 X 2,62 EPDM 70SH	
8	00001728	STRAIGHT PIN SCREW M5 X 6 MM	
9	00030500	CONNECTION HOUSE ASSAY. L = 270 MM	
	00100816.001	REPLACMENT SET	
10	00004717	FLOW LIMITER D. 1.0 MM	
	00033211	FLOW LIMITER D. 2,0 MM	
11	00018821	HOSE CLAMPD. 5,5 MM	
12	00017189	HEX SOCKET HEAD SCREW M4 X 6 MM	
13	00017713	HANDLE ASSAY.	

K09412_01

Steam spout

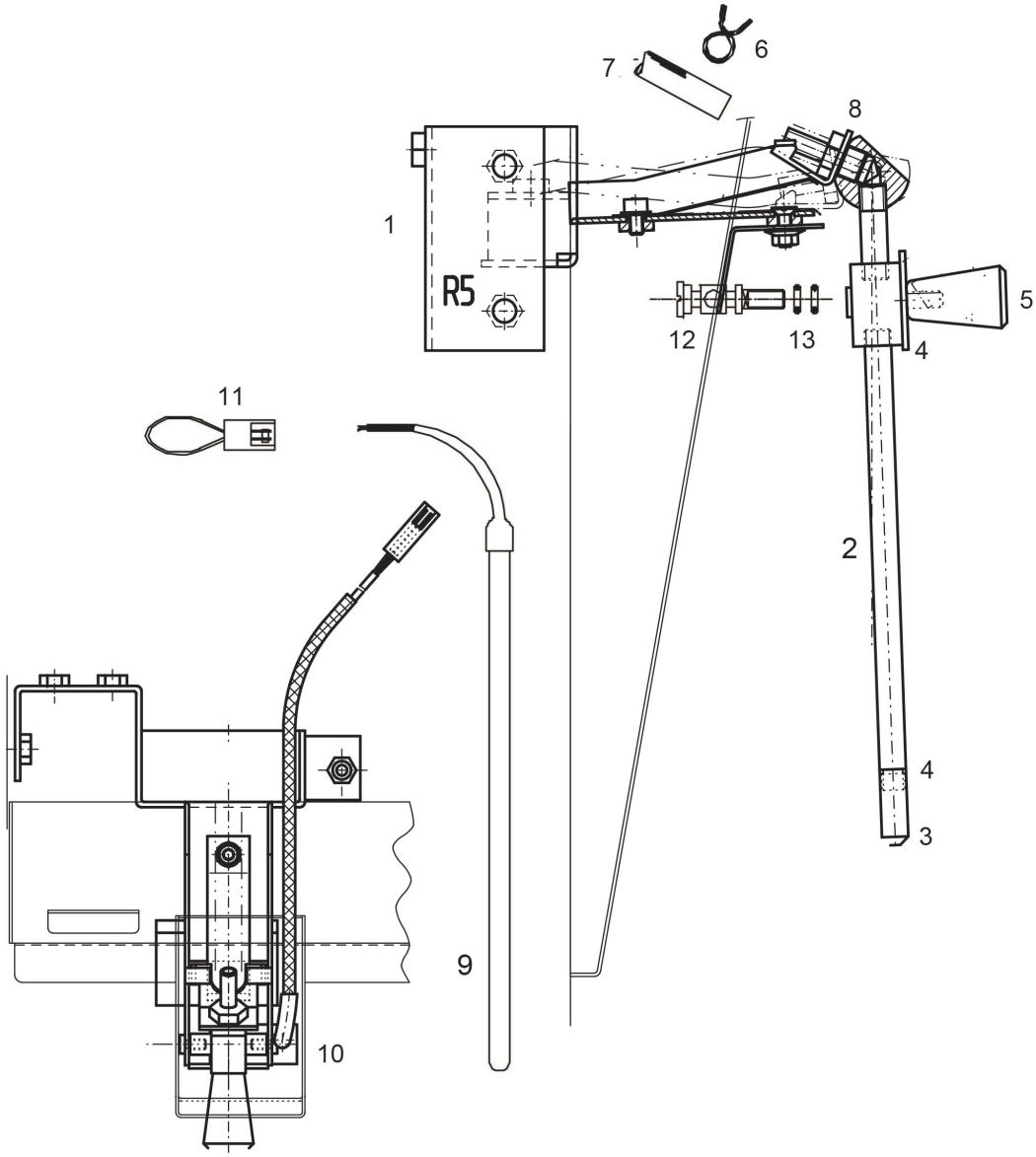

K09412_01

Steam spout

POS.	CODE	DESCRIPTION	NOTES
1	00038319	STEAM SPOUT ASSAY. 110 MML = 110 MM	
	00038320	STEAM SPOUT ASSAY. 160 MML = 160 MM	
2	00040740	PIPE D. 8 X 5 X 110 MM	
	00040742	PIPE D. 8 X 5 X 160 MM	
3	00012224	STEAM NOZZLE 45	
4	00002195	O-RING 5 X 1 EPDM 70SH	
5	00003744	HANDLE	
6	00018821	HOSE CLAMPD. 5,5 MM	
7	00035664	HOSE UNISIL, BLACK D. 4,0 X 1,5 MM	
8	00004124	CONNECTION CONICG 1/8 X D. 6MM	
9	00018576	TEMPERATURE SENSOR ASSAY. 160 MML = 210 MM	
	00027082	TEMPERATURE SENSOR ASSAY. 160 MML = 160 MM	
10	00017189	HEX SOCKET HEAD SCREW M4 X 6 MM	
11	00026869	DUMMY PLUG	
12	00012250	SPINDLE, STEAM SPOUT	
13	00002190	O-RING 3,7 X 1,78 NBR 70SH	

K09710_02

Terminal BOX

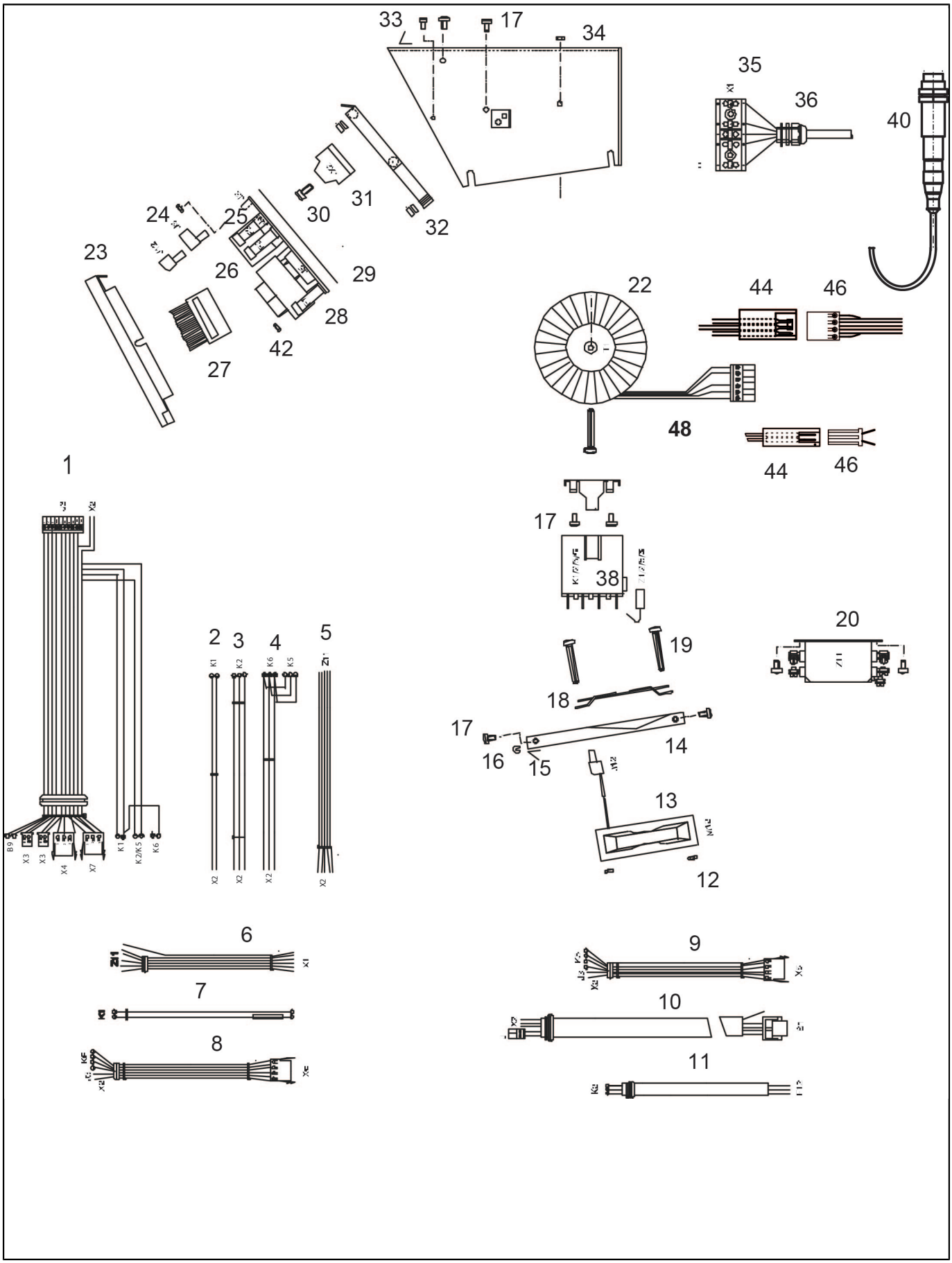

K09710_02

Terminal BOX

POS.	CODE	DESCRIPTION	NOTES
1	00019471	CABLE HARNESS OUTPUT 6 VT 41/42	
	00032450	CABLE HARNESS OUTPUT 6 VT 41/42	
	00032451	CABLE HARNESS OUTPUT 6 VT 52/53	
	00032451	CABLE HARNESS OUTPUT 6 VT 52/53	
2	00019470	CABLE HARNESS X2-K1	
3	00019469	CABLE HARNESS X2-K2	
4	00019468	CABLE HARNESS X1-K6-K5	
5	00036501	CABLE HARNESS X1 - X2	
6	00036500	CONNECTION CABLE ASSAY.	
7	00019472	CABLE HARNESS OUTPUT 5	
8	00019473	CABLE HARNESS OUTPUT 4	
9	00019474	CABLE HARNESS OUTPUT 3	
10	00040862	CABLE HARNESS MAINSWITCH	
11	00019477	CABLE HARNESS OUTPUT 1	
12	00001517	6-EDGE NUT SELF LOCKING M4	
13	00019161	FAN ASSAY. 12V / 70 MA	
14	00018102	COVER	
15	00018459	V-SEALL = 220 MM	
16	00002717	RUBBER EXTRUSIONL = 265 MM	
17	00001069	RAISED CHEESE HEAD SCREWM4 X 6 MM	
18	00019357	GRILLE	
19	00019359	RAISED CHEESE HEAD SCREWM4 X 35 MM	
20	00029237	NOISE FILTER FN	
22	00045788	TOROIDAL CORE TRANSFORMER 200V (BROWN) JAPAN	
	00045790	TOROIDAL CORE TRANSFORMER 220V (ORANGE) GB	
	34200291	TRASF.TOR.120VA 200-208-220-230-240 27/0/27 S90	
23	00018616	COVERPLATE	
24	00001446	6-EDGE NUT M4 X 0,8 MM	
25	00003280	FUSE F6,3A 250V 5X20MM	
26	00003281	MINIATURE FUSE F5AH / 5 X 20MM 250V	
27	00019705	FLAT CABLE 26 POL.	
28	00019358	MINIATURE FUSE F5AH / 5 X 20MM 250V	
29	00052744	Power supply replacement	
	34070295	POWER PRINT S90	
30	00000930	HEX SOCKET HEAD SCREW M5 X 25 MM	
31	00029307	COLLIER DE DISTRIBUTION	
32	00018140	SUPPORT PLATE	
33	00036379	TAPPING SCREW D. 2,9 X 9,5 MM	
34	00001520	6-EDGE NUT SELF LOCKING M5	
35	00029308	MAIN ELECTRIC SUPPLY TERMINAL	
36	00036500	CONNECTION CABLE ASSAY.	
38	34200318	RELAY S90 200-240V	
40	00019163	PHOTO SWITCH COMP. FOR DRAWER	
42	34200292	RELAY POWER BOARD S90	
44	00003082		
	00018024	Plug 4 pole M	
46	00003114		
	00030716	Plug 4 pole F	
48	00003083	Plug 4 pole M	
	00003086	Plug 4 pole F	

K09710_03

Terminal BOX

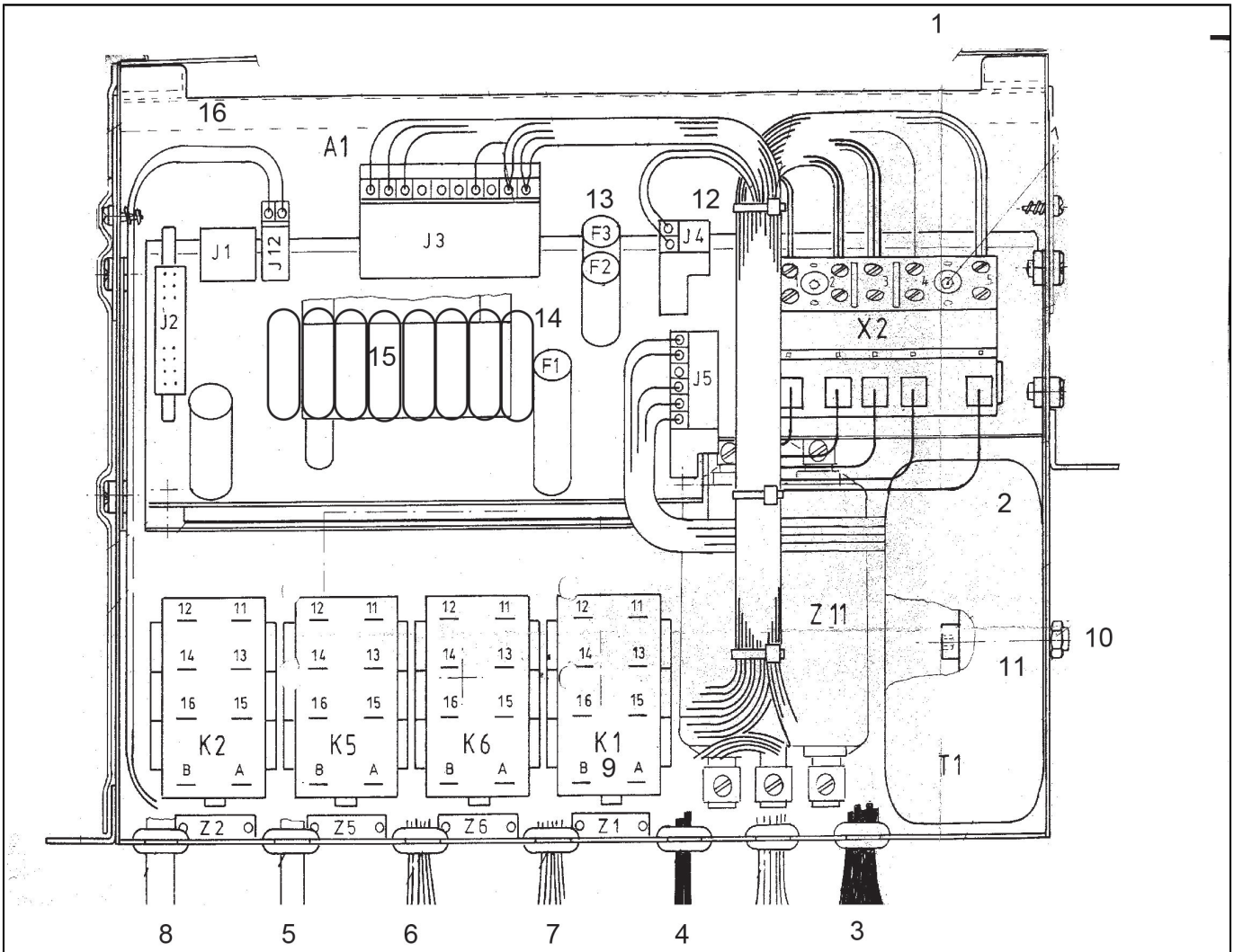

K09710_03

Terminal BOX

POS.	CODE	DESCRIPTION	NOTES
	00001517	6-EDGE NUT SELF LOCKING M4	
	00019473	CABLE HARNESS OUTPUT 4	
	00019474	CABLE HARNESS OUTPUT 3	
	00040862	CABLE HARNESS MAINSWITCH	
1	00019468	CABLE HARNESS X1-K6-K5	
	00019469	CABLE HARNESS X2-K2	
	00019470	CABLE HARNESS X2-K1	
	00019471	CABLE HARNESS OUTPUT 6 VT 41/42	
	00032450	CABLE HARNESS OUTPUT 6 VT 41/42	
	00032451	CABLE HARNESS OUTPUT 6 VT 52/53	
2	00036501	CABLE HARNESS X1 - X2	
3	00036500	CONNECTION CABLE ASSAY.	
4	00019472	CABLE HARNESS OUTPUT 5	
5	00040862	CABLE HARNESS MAINSWITCH	
6	00032448	CABLE HARNESS OUTPUT 3	
7	00032449	CABLE HARNESS OUTPUT 4	
8	00019477	CABLE HARNESS OUTPUT 1	
9	00029308	MAIN ELECTRIC SUPPLY TERMINAL	
	00036500	CONNECTION CABLE ASSAY.	
	34200318	RELAY S90 200-240V	
10	00001520	6-EDGE NUT SELF LOCKING M5	
11	00000935	HEX SOCKET HEAD SCREW M5 X 30 MM	
12	34200071	FIXING CABLE CLAMP	
13	00003280	FUSE F6,3A 250V 5X20MM	
	00003281	MINIATURE FUSE F5AH / 5 X 20MM 250V	
14	00019358	MINIATURE FUSE F5AH / 5 X 20MM 250V	
15	00060473	HOLDER FOR PRINT RELAYS	
	34200292	RELAY POWER BOARD S90	
16	34070295	POWER PRINT S90	

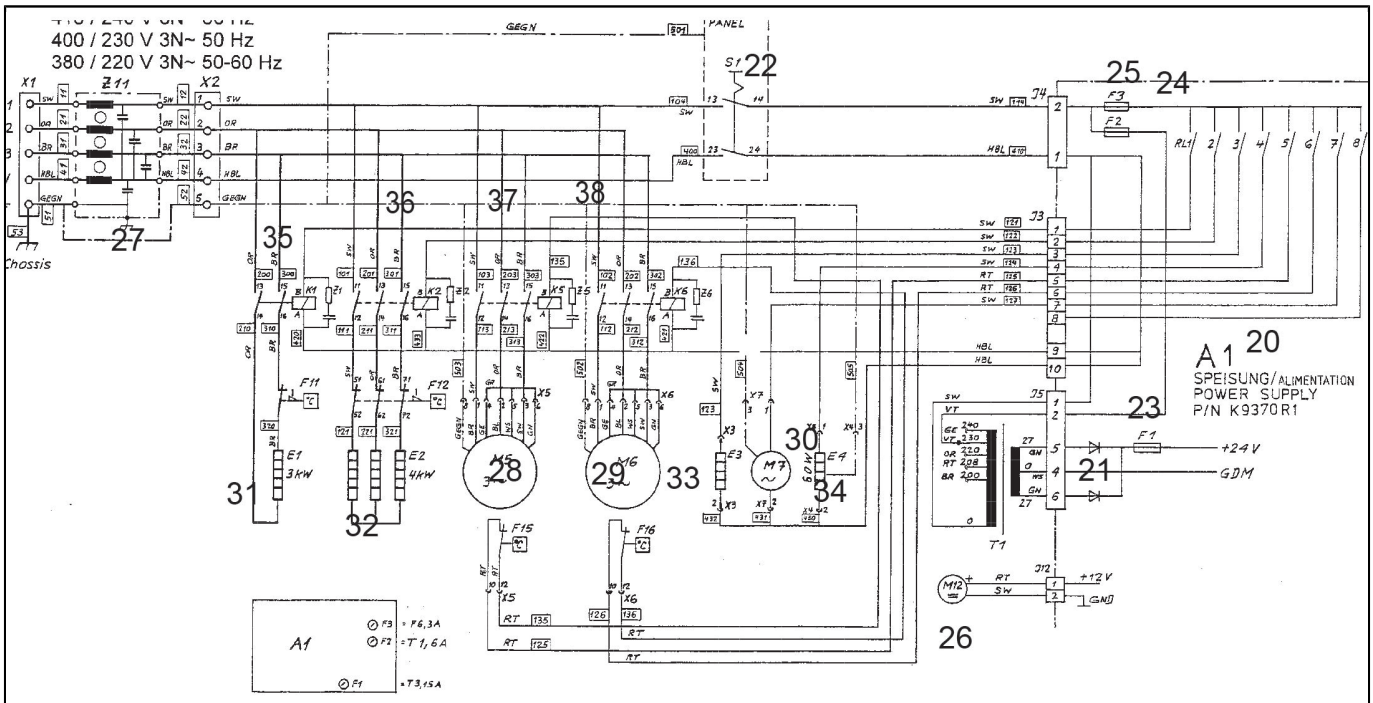
400 / 230 V 3N~ 50 Hz
380 / 220 V 3N~ 50-60 Hz
Chassis
PANEL
A1
SPEISUNG/ALIMENTATION
POWER SUPPLY
P/N K9370R1
+24 V
GDM
+12 V
GND
20
21
22
23
24
25
26
27
28
29
30
31
32
33
34
35
36
37
38

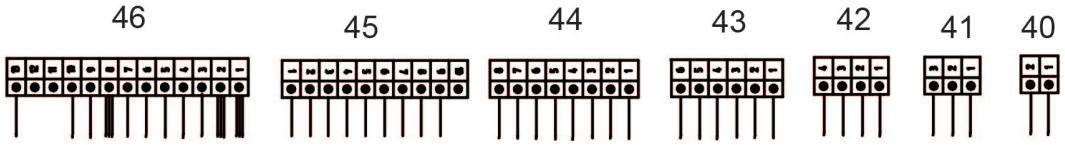
46
45
44
43
42
41
40

K09380_01

ELECTRICAL

POS.	CODE	DESCRIPTION	NOTES
20	00052744	Power supply replacement	
	34070295	POWER PRINT S90	
21	00019162	TOROIDAL CORE TRANSFORMER 120V ASSAY.	
22	00019804		
23	00019358	MINIATURE FUSE F5AH / 5 X 20MM 250V	
24	00003284	MINIATURE FUSE F5AH / 5 X 20MM 250V	
25	00003280	FUSE F6,3A 250V 5X20MM	
26	00019161	FAN ASSAY. 12V / 70 MA	
27	00029237	NOISE FILTER FN	
28	00019164		
29	00041704	GRINDER ASSAY. 3X400V	
30	00011528	PUMP MOTOR ASSAY. 230 V	
31	00031324	HEATING ELEMENT 3.0 KW / 400V / RED	
32	00003537	HEATING ELEMENT 4.0 KW / 230V BOILER 4.0L	
33	00017201	HEATING CARTRIDGE ASSAY. 220W / 230V BREWING GROUP	
34	00018626	HEATING ELEMENT 380MM / 60W / 220V (HEATED CUP TR	
35	34200318	RELAY S90 200-240V	
36	00003374	HEATING CONTACTOR 200 V (JAPAN)	
37	34200318	RELAY S90 200-240V	
38	00003374	HEATING CONTACTOR 200 V (JAPAN)	
40	00048774	PLUG 2 PLOE F	
41	00019388	PLUG 3 PLOE F	
42	00033154	PLUG 4 PLOE F	
43	00019030	Plug 6 ploe F	
44	00019390	Plug 8 ploe F	
45	00019388	PLUG 3 PLOE F	
	00019391	PLUG 10 PLOE F	
46	00019392	PLUG 13 PLOE F	
	00048774	PLUG 2 PLOE F	

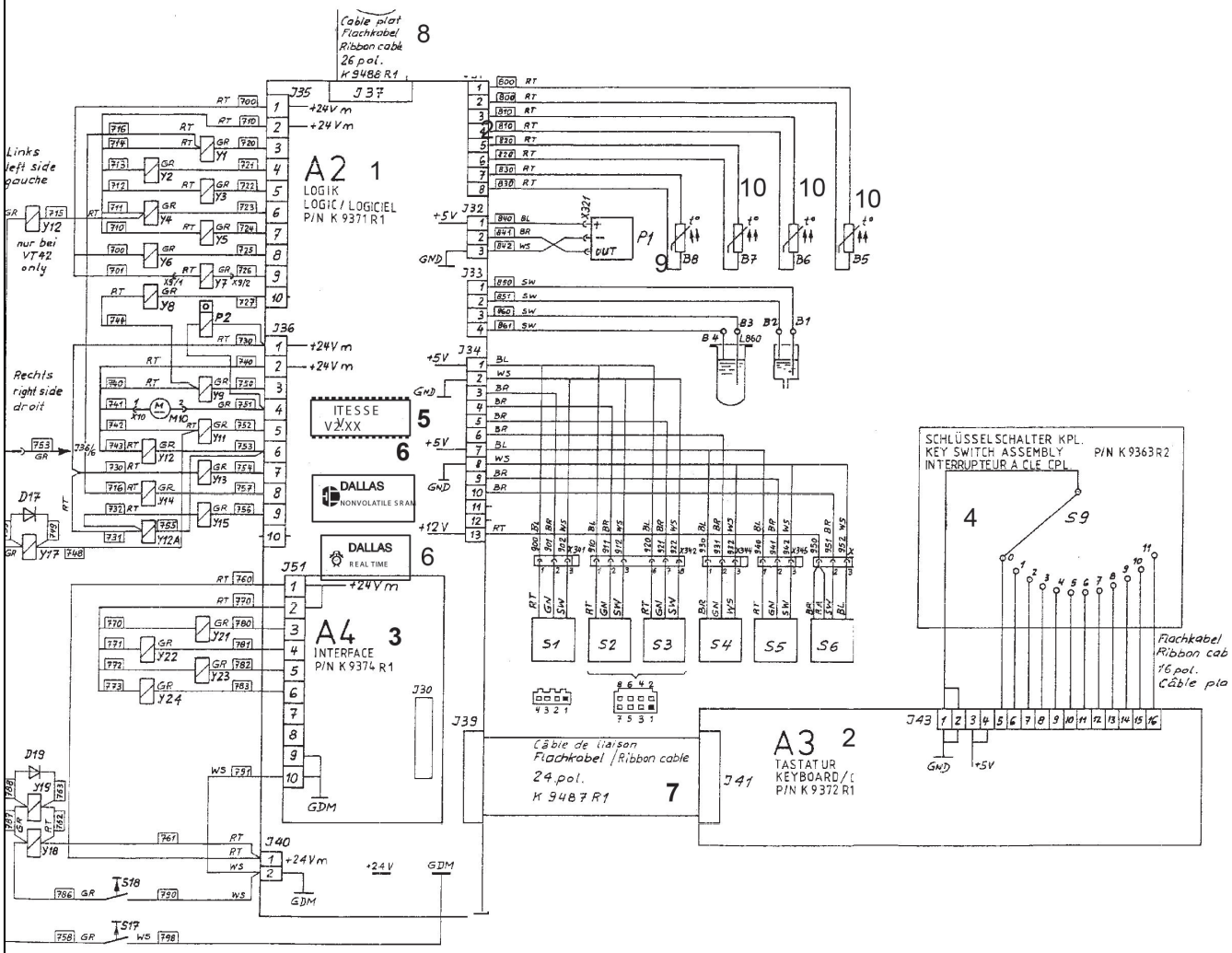
Cable plat
Flachkabel
Ribbon cable
26 pol.
K 9488 R1
8
J37
A2 1
LOGIK
LOGIC / LOGICIEL
P/N K 9371 R1
Links
left side
gauche
Rechts
right side
droit
nur bei
VT42
only
ITESSE
V2XX
5
6
DALLAS
NONVOLATILE SRAM
DALLAS
REAL TIME
A4 3
INTERFACE
P/N K 9374 R1
GDM
10
10
10
P1
OUT
B8
B7
B6
B5
B4
B3
B2
B1
SCHLÜSSELSCHALTER KPL.
KEY SWITCH ASSEMBLY
INTERRUPTEUR A CLE CPL.
P/N K 9363 R2
4
S9
S1
S2
S3
S4
S5
S6
Câble de liaison
Flachkabel / Ribbon cable
24 pol.
K 9487 R1
7
A3 2
TASTATUR
KEYBOARD/
P/N K 9372 R1
Flachkabel
Ribbon cab
16 pol.
Câble pla

K09380_02

ELECTRICAL

POS.	CODE	DESCRIPTION	NOTES
1	00052745	MAIN BOARD - REPLACEMENT R1	
	00100113.099	"R.E.V." MAINBOARD S90 R2	
	34070296	CPU BOARD S90 R2N	
	34070296	CPU BOARD S90 R2N	
2	00052746	KEYBOARD - REPLACEMENT	
	34070297	KEYBOARD PRINT S90	
3	00019533	INTERFACE	
	00052747	INTERFACE EXT. REGISTRATION REPLACEMENT	
4	00019165	KEY LOCK SWITCH	
	00019171	PRINT FOR KEY	
5	00054003	EPROM R1	
	00100113.100	EPROM R2	
6	00030639	NV - RAM DALLAS REAL TIME	
	00033372	NON VOLATILE RAM DS1225 Y200	
7	00019160	FLAT CABLE 24 POL.	
8	00019705	FLAT CABLE 26 POL.	
10	00012424	TEMPERATURE SENSOR ASSAY. PT 100 KPL D. 6 X 80 M	

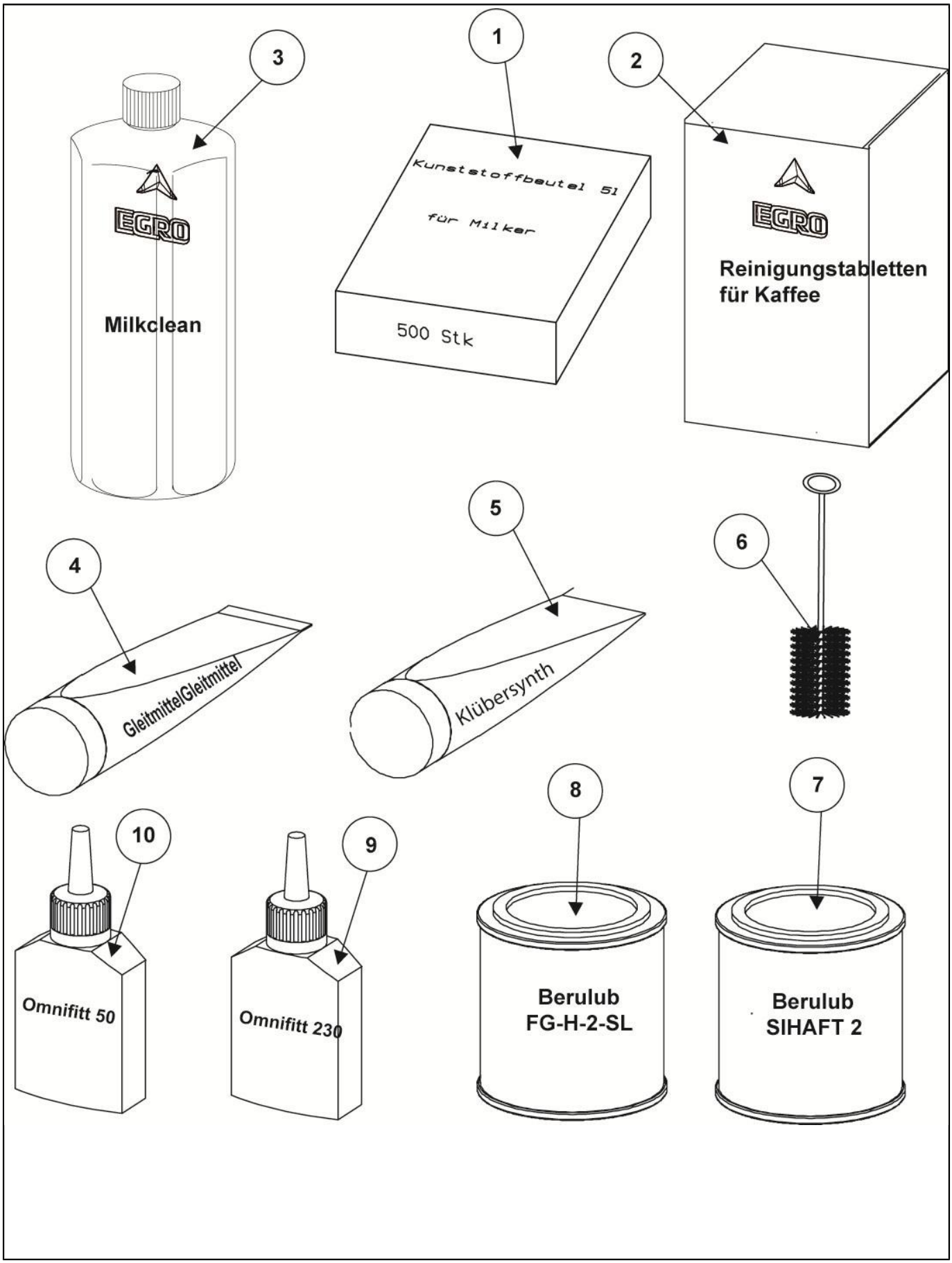
1
2
3
4
5
6
7
8
9
10
EGRO
Milkclean
Kunststoffbeutel 5l
für Milker
500 Stk
EGRO
Reinigungstabletten
für Kaffee
GleitmittelGleitmittel
Klübersynth
Omnifitt 50
Omnifitt 230
Berulub
FG-H-2-SL
Berulub
SIHAFT 2

A10001_05

material of use + literature

POS.	CODE	DESCRIPTION	NOTES
1	00033858	PLASTIC BAG (5 L) FOR MILKER	
	00033859	PLASTIC BAG (10 L) FOR MILKER	
2	69000408	COFFEE CLEANING TABLETS JAR 100TAB	
3	69000400	CLEANER ACID FORMULA SYSTEM MILK 1 LT	
4	00046848	PASTE FOR CONDUCTION OF HEAT	
	50000004	LUBRICANT COMPOUND KG.0.200	
5	00054567	LUBRICANT SYNTHETIC KLUBER UH1 64-240 45 GR.	
	00058029	LUBRICANT SYNTHETIC KLUBER UH1 64-2403, 1000 GR.	
6	00030592	CLEANING BRUSHES FOR MILKER	
7	00059247	LUBRICANT BERLULUB SHIAFT 2 TYP 2	
8	00059246	LUBRICANT BERULUB TYP FG-H-2SL	
9	00053425	Lubricant Omnifit 230 M	
10	00035815	LUBRICANT OMNIFIT 50 M (LOW SOLIDITY)	

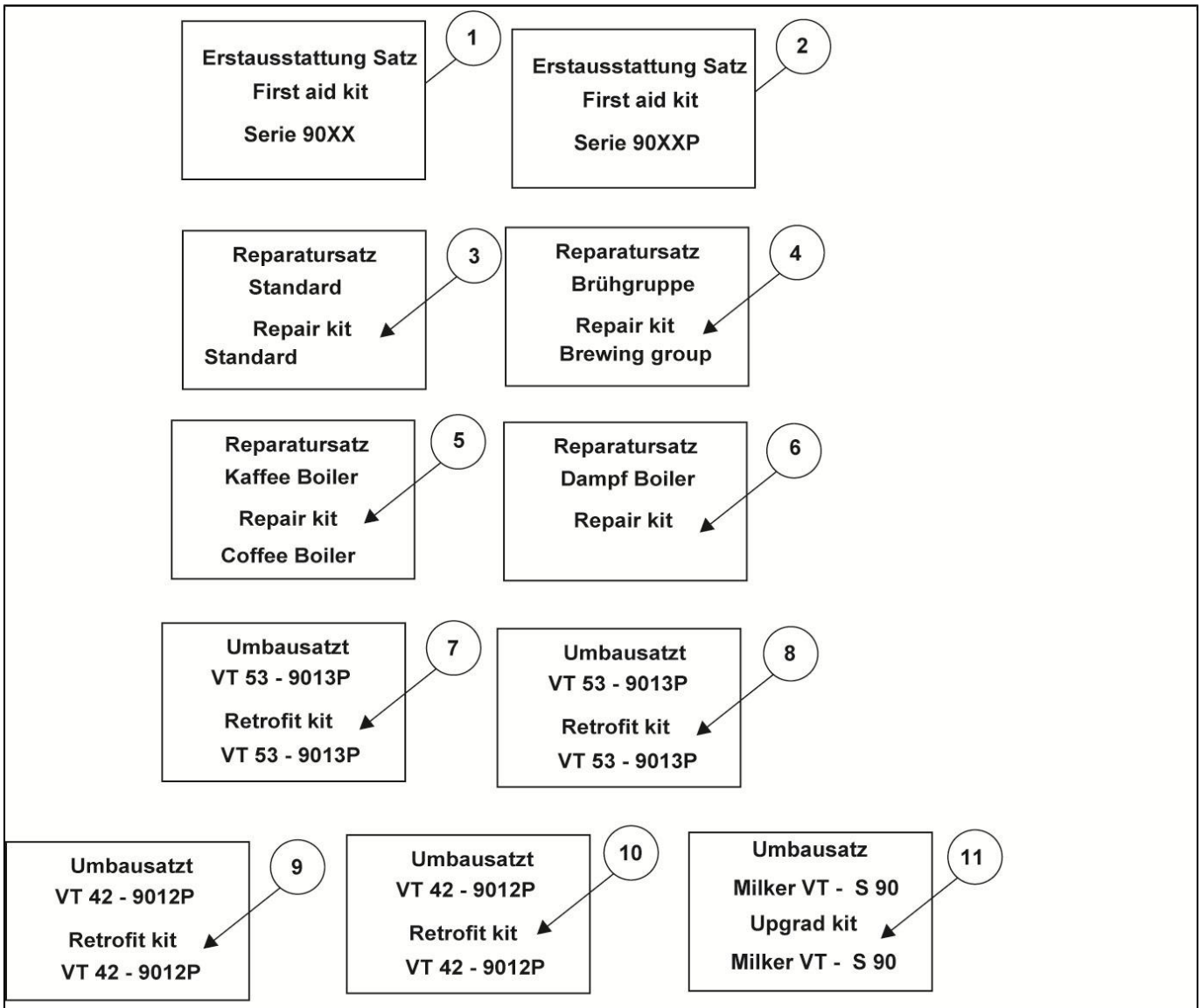
Erstausstattung Satz
First aid kit
Serie 90XX
1
Erstausstattung Satz
First aid kit
Serie 90XXP
2
Reparatursatz
Standard
Repair kit
Standard
3
Reparatursatz
Brühgruppe
Repair kit
Brewing group
4
Reparatursatz
Kaffee Boiler
Repair kit
Coffee Boiler
5
Reparatursatz
Dampf Boiler
Repair kit
6
Umbausatzt
VT 53 - 9013P
Retrofit kit
VT 53 - 9013P
7
Umbausatzt
VT 53 - 9013P
Retrofit kit
VT 53 - 9013P
8
Umbausatzt
VT 42 - 9012P
Retrofit kit
VT 42 - 9012P
9
Umbausatzt
VT 42 - 9012P
Retrofit kit
VT 42 - 9012P
10
Umbausatz
Milker VT - S 90
Upgrad kit
Milker VT - S 90
11

K10000_03

Service + Repair kits

POS.	CODE	DESCRIPTION	NOTES
1	00034771	FIRST AID KIT	
2	00034772	FIRST AID KIT S 90 P	
3	00032206	GASKET KIT 90 SERIES	
4	00032205	GASKET KIT STARTING CYLINDER	
5	00032209	GASKET KIT STEAM BOILER	
6	00032207	GASKET KIT STEAM BOILER	
7	00051800		
8	00051801		
9	00051802		
10	00051803		
11	00051804		

Alphanumeric index

Code	No. table	Pos.
00000928	K09314_01	9
00000928	K09500_01	10
00000930	K09314_01	4
00000930	K09710_02	30
00000931	K10110_01	13
00000932	K09770_02	11
00000932	K09770_02	9
00000934	K09770_03,	7
00000935	K09710_03	11
00000935	K09770_03,	11
00000937	K11175_01	5
00000940	K09770_01	19
00000940	K09770_02	4
00000942	K09160_01	11
00000942	K09430_01	19
00000942	K09770_01	17
00000942	K09770_02	1
00000943	K09160_01	16
00000943	K09770_01	20
00001069	K09710_02	17
00001074	K09210_01	3
00001074	K09444_01	26
00001084	K09470_02	22
00001085	K09470_01	13
00001168	K11175_01	10
00001172	K10105_01	5
00001294	K09210_01	14
00001446	K09160_01	27
00001446	K09710_02	24
00001515	K12382_01	17
00001517	K09710_02	12
00001517	K09710_03	
00001520	K09710_02	34
00001520	K09710_03	10
00001520	K09770_03,	10
00001522	K11175_01	7
00001595	K09470_01	9
00001595	K09470_02	9
00001728	K09302_01	8
00001729	K10105_01	7
00001971	K09314_01	11
00001971	K09770_01	22
00002068	K09770_01	17
00002068	K09770_02	1
00002068	K11175_01	9
00002190	K09412_01	13
00002195	K09302_01	6
00002195	K09412_01	4
00002205	K09302_01	7
00002207	K09770_03,	20
00002212	K09770_03,	18
00002218	K09444_01	4
00002240	K09302_01	4
00002250	K09210_01	6
00002250	K09770_02	7
00002254	K09160_01	12
00002254	K09430_01	5
00002254	K09770_03,	16
00002268	K09160_02	20
00002268	K09160_02	20
00002308	K10105_01	12
00002347	K09430_01	22
00002350	K09160_01	26
00002717	K09710_02	16
00002733	K09390_01	5
00002734	K09160_02	6
00002734	K09390_01	6

Code	No. table	Pos.
00002734	K09430_01	17
00002737	K09160_01	23
00002752	K09160_02	18
00002752	K09160_02	18
00002807	K09430_01	9
00003082	K09710_02	44
00003083	K09710_02	48
00003086	K09710_02	48
00003114	K09710_02	46
00003200	K09160_01	8
00003200	K09444_01	24
00003280	K09380_01	25
00003280	K09710_02	25
00003280	K09710_03	13
00003281	K09710_02	26
00003281	K09710_03	13
00003284	K09380_01	24
00003374	K09380_01	36
00003374	K09380_01	38
00003442	K11175_01	4
00003537	K09380_01	32
00003744	K09412_01	5
00004013	K11175_01	8
00004019	K09210_01	19
00004104	K09399_01	22
00004105	K09399_01	22
00004108	K10242_01	14
00004111	K09444_01	9
00004112	K09210_01	11
00004113	K09444_01	22
00004115	K10242_01	8
00004116	K09210_01	2
00004116	K09399_01	6
00004116	K09770_01	8
00004116	K09770_03,	8
00004118	K09160_01	14
00004118	K09160_02	15
00004118	K09399_01	17
00004122	K09210_01	1
00004124	K09160_02	7
00004124	K09412_01	8
00004125	K09210_01	24
00004125	K09399_01	5
00004236	K11175_01	2
00004304	K09500_01	3
00004315	K09500_01	4
00004452	K12382_01	3
00004452	K12382_02	22
00004454	K12382_01	3
00004454	K12382_02	22
00004473	K09160_02	27
00004473	K09210_01	16
00004473	K09444_01	13
00004474	K09210_01	18
00004474	K09470_01	14
00004474	K09470_02	14
00004474	K10110_01	17
00004475	K09444_01	10
00004475	K10242_01	17
00004476	K09470_02	13
00004476	K10110_01	8
00004476	K10110_01	8
00004491	K09210_01	15
00004492	K09444_01	12
00004633	K09160_02	24
00004711	K09390_01	8
00004711	K09430_01	16

Code	No. table	Pos.
00004713	K09160_02	13
00004713	K09210_01	10
00004713	K09444_01	17
00004714	K09160_02	5
00004714	K09399_01	18
00004717	K09302_01	10
00004724	K09210_01	7
00004724	K09770_02	6
00005295	K09302_01	2
00005295	K09302_01	3
00009898	K09160_01	28
00009898	K09430_01	12
00009900	K09430_01	13
00009914	K10242_01	7
00009917	K09210_01	4
00009925	K09160_01	25
00009926	K09430_01	15
00010081	K09160_02	22
00010331	K09430_01	7
00010356	K10110_01	16
00010488	K09399_01	16
00010599	K09160_02	25
00011027	K09210_01	8
00011028	K09210_01	5
00011029	K09770_02	6
00011313	K09160_02	14
00011313	K09399_01	15
00011313	K09430_01	20
00011313	K09444_01	14
00011528	K09380_01	30
00011528	K11175_01	1
00011564	K09500_01	7
00011565	K09500_01	9
00011565	K10110_01	12
00012002	K09444_01	10
00012014	K09430_01	18
00012077	K09430_01	11
00012200	K09160_01	13
00012200	K09430_01	8
00012206	K09160_01	7
00012224	K09412_01	3
00012250	K09412_01	12
00012424	K09380_02	10
00012460	K09160_02	19
00012460	K09160_02	26
00012660	K09160_02	19
00012803	K09160_01	15
00012810	K09160_01	2
00012811	K09160_01	2
00012815	K09160_01	3
00012822	K09302_01	5
00017089	K09770_01	26
00017091	K09770_01	16
00017092	K09770_01	21
00017093	K09770_01	25
00017118	K09770_02	10
00017119	K09770_03,	1
00017139	K09770_03,	19
00017140	K09770_03,	25
00017141	K09770_03,	32
00017142	K09770_03,	27
00017143	K09770_01	27
00017143	K09770_01	28
00017151	K09314_01	10
00017158	K09770_03,	9
00017159	K09770_03,	30
00017161	K09770_01	10

Alphanumeric index

Code	No. table	Pos.
00017162	K09770_03,	26
00017163	K09770_03,	31
00017164	K09770_03,	6
00017165	K09770_03,	29
00017165	K09770_03,	5
00017166	K09770_03,	4
00017179	K09770_01	11
00017179	K10105_01	17
00017181	K09770_03,	14
00017182	K09770_01	15
00017189	K09302_01	12
00017189	K09399_01	13
00017189	K09412_01	10
00017189	K09770_03,	11
00017190	K09770_02	12
00017192	K09770_01	23
00017193	K09770_01	6
00017196	K09770_01	13
00017197	K09770_03,	13
00017198	K09770_03,	23
00017199	K09770_03,	24
00017201	K09380_01	33
00017201	K09770_01	4
00017713	K09302_01	13
00017719	K09160_01	20
00017791	K09160_01	1
00017792	K09160_01	3
00017795	K09160_01	4
00017796	K09160_01	5
00017797	K09160_01	24
00017798	K09160_01	22
00017827	K09430_01	3
00017828	K09430_01	3
00018024	K09710_02	44
00018036	K09430_01	2
00018038	K09430_01	1
00018044	K09430_01	4
00018102	K09710_02	14
00018120	K12382_02	8
00018122	K12382_02	8
00018140	K09710_02	32
00018141	K09390_01	2
00018142	K09390_01	2
00018143	K09390_01	2
00018148	K09390_01	2
00018172	K12382_01	14
00018172	K12382_02	25
00018172	K12382_02	9
00018190	K10110_01	6
00018268	K12382_01	9
00018268	K12382_02	25
00018269	K09444_01	5
00018269	K09444_01	7
00018270	K09160_01	17
00018335	K09444_01	6
00018459	K09710_02	15
00018576	K09412_01	9
00018616	K09710_02	23
00018626	K09380_01	34
00018626	K09390_01	3
00018799	K10242_01	9
00018803	K09160_02	16
00018804	K09160_02	3
00018821	K09210_01	17
00018821	K09302_01	11
00018821	K09412_01	6
00018837	K09470_02	20

Code	No. table	Pos.
00018843	K09430_01	6
00018843	K10242_01	15
00018843	K10242_01	18
00018846	K09399_01	14
00018846	K09470_02	19
00018846	K10110_01	7
00018863	K09470_01	6
00018863	K09470_02	6
00018864	K09470_01	11
00018864	K09470_02	11
00018864	K12382_01	12
00018869	K09210_01	23
00018869	K09399_01	7
00018927	K09444_01	1
00019006	K09500_01	6
00019009	K12382_01	16
00019009	K12382_02	24
00019030	K09380_01	43
00019152	K09444_01	15
00019152	K11175_01	12
00019160	K09380_02	7
00019161	K09380_01	26
00019161	K09710_02	13
00019162	K09380_01	21
00019163	K09710_02	40
00019163	K12382_01	15
00019164	K09380_01	28
00019165	K09380_02	4
00019165	K12382_01	3
00019165	K12382_02	22
00019171	K09380_02	4
00019300	K09770_01	5
00019357	K09710_02	18
00019358	K09380_01	23
00019358	K09710_02	28
00019358	K09710_03	14
00019359	K09710_02	19
00019388	K09380_01	41
00019388	K09380_01	45
00019390	K09380_01	44
00019391	K09380_01	45
00019392	K09380_01	46
00019468	K09710_02	4
00019468	K09710_03	1
00019469	K09710_02	3
00019469	K09710_03	1
00019470	K09710_02	2
00019470	K09710_03	1
00019471	K09710_02	1
00019471	K09710_03	1
00019472	K09710_02	7
00019472	K09710_03	4
00019473	K09710_02	8
00019473	K09710_03	
00019474	K09710_02	9
00019474	K09710_03	
00019477	K09710_02	11
00019477	K09710_03	8
00019477	K09770_03,	8
00019507	K09770_01	9
00019533	K09380_02	3
00019533	K09470_01	7
00019533	K09470_02	7
00019535	K09470_01	8
00019535	K09470_02	8
00019568	K09160_02	2
00019568	K09210_01	25

Code	No. table	Pos.
00019568	K09399_01	8
00019705	K09380_02	8
00019705	K09710_02	27
00019708	K09310_01	3
00019709	K09310_01	5
00019804	K09380_01	22
00019804	K12382_02	12
00019824	K09160_01	21
00019827	K09500_01	1
00020061	K09770_01	2
00020062	K09399_01	2
00020062	K09770_02	8
00020082	K09444_01	2
00023764	K12382_01	10
00023764	K12382_02	26
00026730	K10110_01	2
00026730	K12382_02	14
00026869	K09412_01	11
00027060	K12382_01	17
00027082	K09412_01	9
00027246	K09399_01	4
00027283	K09470_01	16
00027283	K09470_02	16
00027283	K09470_02	17
00027287	K09470_01	18
00027288	K09470_01	17
00027315	K09470_01	16
00027315	K09470_02	16
00027444	K09470_01	12
00027444	K09470_02	12
00027893	K12382_01	10
00027893	K12382_02	26
00028265	K09390_01	3
00028507	K09770_03,	2
00028508	K09770_03,	3
00028510	K09444_01	21
00028627	K10105_01	15
00028631	K10105_01	14
00028637	K09770_01	18
00028822	K09160_02	10
00028840	K09210_01	28
00028840	K09399_01	10
00028842	K10105_01	11
00028926	K09210_01	26
00028928	K09210_01	26
00029160	K09390_01	9
00029221	K09399_01	12
00029237	K09380_01	27
00029237	K09710_02	20
00029307	K09710_02	31
00029308	K09710_02	35
00029308	K09710_03	9
00029308	K09770_03,	9
00029334	K09160_02	17
00029335	K09160_02	1
00029337	K09160_02	9
00030104	K09444_01	10
00030257	K09444_01	13
00030500	K09302_01	9
00030500	K09444_01	18
00030514	K10242_01	10
00030516	K10242_01	6
00030518	K10242_01	3
00030519	K10242_01	5
00030519	K10242_01	6
00030520	K10242_01	13
00030522	K10242_01	12

Alphanumeric index

Code	No. table	Pos.
00030592	A10001_05	6
00030622	K09160_01	9
00030625	K09314_01	6
00030639	K09380_02	6
00030716	K09710_02	46
00030726	K09770_02	5
00031136	K09210_01	27
00031136	K09399_01	9
00031137	K09770_03,	10
00031324	K09380_01	31
00031326	K09430_01	1
00031327	K09430_01	2
00031330	K09160_01	1
00031945	K09770_01	3
00032186	K10105_01	4
00032205	K09770_01	3
00032205	K10000_03	4
00032206	K10000_03	3
00032207	K10000_03	6
00032209	K10000_03	5
00032307	K12382_02	12
00032446	K09160_01	6
00032446	K09430_01	21
00032448	K09710_03	6
00032449	K09710_03	7
00032449	K09770_03,	7
00032450	K09710_02	1
00032450	K09710_03	1
00032451	K09710_02	1
00032451	K09710_02	1
00032451	K09710_03	1
00032819	K09444_01	4
00033013	K09444_01	8
00033014	K09444_01	8
00033154	K09380_01	42
00033168	K10105_01	13
00033211	K09302_01	10
00033372	K09380_02	6
00033858	A10001_05	1
00033859	A10001_05	1
00034566	K09310_01	10
00034569	K09310_01	4
00034569	K09310_01	9
00034572	K09310_01	8
00034583	K09310_01	8
00034771	K10000_03	1
00034772	K10000_03	2
00035664	K09412_01	7
00035815	A10001_05	10
00035932	K10242_01	1
00036379	K09710_02	33
00036441	K10105_01	3
00036500	K09710_02	36
00036500	K09710_02	6
00036500	K09710_03	3
00036500	K09710_03	9
00036500	K09770_03,	9
00036501	K09710_02	5
00036501	K09710_03	2
00037079	K09444_01	1
00037170	K09770_01	24
00037170	K10105_01	1
00037520	K10110_01	1
00037887	K09314_01	5
00037892	K09160_01	18
00037998	K10105_01	16
00037999	K10105_01	16

Code	No. table	Pos.
00038144	K10110_01	1
00038319	K09412_01	1
00038320	K09412_01	1
00038365	K09770_01	1
00038996	K09470_02	21
00039078	K09470_02	17
00039078	K09470_02	17
00039078	K12382_01	11
00039078	K12382_02	29
00039209	K09470_01	3
00039211	K09470_01	10
00039211	K09470_02	10
00040249	K09770_01	12
00040740	K09412_01	2
00040742	K09412_01	2
00040824	K09314_01	2
00040862	K09710_02	10
00040862	K09710_03	
00040862	K09710_03	5
00041493	K11175_01	11
00041695	K09314_01	8
00041696	K09314_01	9
00041704	K09314_01	1
00041704	K09380_01	29
00043629	K09160_01	10
00044464	K09444_01	11
00044614	K09770_01	14
00045788	K09710_02	22
00045790	K09710_02	22
00046288	K09500_01	11
00046307	K09500_01	1
00046420	K09310_01	1
00046548	K09310_01	2
00046848	A10001_05	4
00047102	K09390_01	1
00048774	K09380_01	40
00048774	K09380_01	46
00049016	K09470_01	1
00049135	K10242_01	4
00050090	K12382_02	6
00050143	K12382_01	13
00050143	K12382_02	28
00050176	K09470_01	5
00050176	K09470_02	5
00050184	K12382_01	6
00050184	K12382_02	20
00050191	K12382_02	16
00050194	K09470_01	4
00050194	K09470_02	4
00050198	K12382_02	19
00050209	K09470_01	2
00050209	K09470_02	2
00050489	K12382_02	17
00050490	K12382_01	21
00050490	K12382_02	30
00050491	K12382_01	7
00050491	K12382_02	31
00051694	K09302_01	1
00051781	K12382_02	15
00051785	K12382_02	13
00051786	K12382_02	18
00051800	K10000_03	7
00051801	K10000_03	8
00051802	K10000_03	9
00051803	K10000_03	10
00051804	K10000_03	11
00051817	K12382_02	5

Code	No. table	Pos.
00051818	K12382_02	7
00051819	K12382_02	2
00051823	K12382_02	3
00051826	K12382_02	1
00051850	K12382_02	10
00051851	K12382_02	11
00052144	K12382_02	16
00052151	K12382_02	6
00052154	K12382_02	19
00052524	K12382_02	7
00052534	K09470_01	1
00052534	K09470_02	17
00052606	K12382_01	20
00052608	K12382_01	19
00052744	K09380_01	20
00052744	K09710_02	29
00052745	K09380_02	1
00052746	K09380_02	2
00052747	K09380_02	3
00052801	K12382_02	5
00052811	K09470_01	1
00052816	K12382_02	7
00052909	K09314_01	1
00052915	K09770_01	2
00052916	K09770_01	3
00052954	K12382_02	15
00052960	K12382_02	1
00053170	K12382_02	7
00053247	K10110_01	6
00053425	A10001_05	9
00053684	K10110_01	3
00054003	K09380_02	5
00054048	K09210_01	22
00054048	K09770_02	8
00054052	K09210_01	20
00054052	K09399_01	1
00054229	K09444_01	17
00054361	K09444_01	2
00054567	A10001_05	5
00055924	K09399_01	20
00057681	K10242_01	20
00058029	A10001_05	5
00058336	K12382_01	1
00058336	K12382_02	21
00058340	K12382_01	1
00058340	K12382_02	21
00058371	K09770_01	17
00058371	K09770_02	2
00059246	A10001_05	8
00059247	A10001_05	7
00060076	K10110_01	9
00060116	K10105_01	6
00060151	K10110_01	8
00060473	K09710_03	15
00060490	K10242_01	19
00060507	K09470_01	18
00060895	K09770_03,	28
00060906	K12382_01	2
00060906	K12382_02	23
00060907	K12382_01	2
00060907	K12382_02	23
00060908	K12382_01	2
00060908	K12382_02	23
00060909	K12382_01	2
00060909	K12382_02	23
00060910	K12382_01	2
00060910	K12382_02	23

Alphanumeric index

Code	No. table	Pos.
00060911	K12382_01	2
00060911	K12382_02	23
00100113.099	K09380_02	1
00100113.100	K09380_02	5
00100147.001	K09160_02	11
00100147.001	K09210_01	22
00100147.001	K09399_01	3
00100147.001	K09770_02	8
00100149.001	K09160_02	11
00100149.001	K09210_01	22
00100149.001	K09399_01	3
00100149.001	K09770_02	8
00100186.013	K09470_01	17
00100236.001	K09160_02	8
00100248.002	K11175_01	13
00100300.001	K09430_01	10
00100316.001	K10110_01	10
00100322.001	K09470_01	15
00100322.001	K09470_02	15
00100322.001	K10110_01	11
00100344.001	K09470_01	15
00100344.001	K09470_02	15
00100344.001	K10110_01	11
00100345.001	K09470_01	15
00100345.001	K09470_02	15
00100345.001	K10110_01	11
00100558.001	K09399_01	3
00100559.001	K09210_01	21
00100559.001	K09399_01	3
00100559.001	K09444_01	2
00100559.001	K09470_01	6
00100559.001	K09470_02	6
00100560.001	K09210_01	21
00100560.001	K09399_01	3
00100560.001	K09444_01	2
00100560.001	K09470_01	6
00100560.001	K09470_02	6
00100816.001	K09160_02	12
00100816.001	K09302_01	9
00100816.001	K10242_01	16
00100817.001	K09444_01	18
00100820.001	K09160_02	4
00100820.001	K09444_01	19
00100821.001	K09210_01	9
00100821.001	K09399_01	19
00100821.001	K09399_01	21
00100821.001	K09444_01	20
10060605	K10242_01	2
10705527	K12382_01	8
10705527	K12382_02	27
10705529	K09310_01	7
10705529	K12382_01	8
10705529	K12382_02	27
10705530	K09310_01	6
10705719	K09444_01	23
23000289	K09444_01	3
34020003	K11175_01	3
34040183	K09160_02	11
34070295	K09380_01	20
34070295	K09710_02	29
34070295	K09710_03	16
34070296	K09380_02	1
34070296	K09380_02	1
34070297	K09380_02	2
34160024	K09160_01	19
34200071	K09710_03	12
34200291	K09710_02	22

Code	No. table	Pos.
34200292	K09710_02	42
34200292	K09710_03	15
34200318	K09380_01	35
34200318	K09380_01	37
34200318	K09710_02	38
34200318	K09710_03	9
34200318	K09770_03,	9
35002511	K09430_01	14
36402001	K09160_02	21
36402001	K09444_01	25
36402001	K10242_01	11
37030509	K09390_01	4
37030509	K12382_01	5
38228072	K09210_01	12
38228072	K09399_01	11
38228072	K09470_02	16
38228072	K09770_03,	22
38228072	K10110_01	5
38228073	K10105_01	8
45010209	K12382_01	4
45010209	K12382_02	4
50000004	A10001_05	4
69000400	A10001_05	3
69000408	A10001_05	2
69000737	K09444_01	16
69200133	K09770_03,	15
69200133	K10105_01	2
69200133	K10110_01	4
69200134	K09210_01	13
69200134	K09770_01	7
69200134	K09770_03,	21
69200134	K10110_01	14
69200139	K10110_01	15
69200174	K10110_01	11

Contacts

HEADQUARTERS, PRODUCTION PLANT AND R&D CENTERS

Rancilio Group s.p.a.
Viale della Repubblica 40
20010 Villastanza di Parabiago
Milano - Italy
Tel +39 0331 408200
Fax +39 0331 551437
www.ranciliogroup.com
info@ranciliogroup.com

Egro Suisse AG
Bahnhofstrasse 66
5605 Dottikon - Switzerland
Tel. +41 (0)56 616 95 95
Fax +41 (0)56 616 95 97
www.egrocoffee.com
info@egrocoffee.com

WORLDWIDE BRANCH LOCATIONS

SPAIN
RancilioGroup Espana, s.a.
Gran Vía de Carlos III, 84 3ª
Edificio Trade
08028 Barcelona - Spain
Ph. +34 902 884 275
Ph. +34 934 923 414
Fax +34 934 965 701
www.ranciliogroup.com
info-es@ranciliogroup.com

PORTUGAL
Rancilio Group Portugal Lda
Estrada da Falagueira nº 68 E
2700-365 Amadora-Lisboa - Portugal
Ph. + 351 21 019 10 91
Fax + 351 21 019 10 91

Rua Nova do Seixo 1282
4465-706 Leca do Balio-Porto - Portugal
Ph. + 351 22 010 14 19
Fax + 351 22 010 14 19
www.ranciliogroup.com
info-pt@ranciliogroup.com

GERMANY
Rancilio Group Deutschland GmbH
Talstrasse 27
97990 Weikersheim - Germany
Ph. +49 7934 99 29 30
Fax +49 7934 99 29 330
www.ranciliogroup.de
info-de@ranciliogroup.com

SWITZERLAND
Egro Suisse AG
Bahnhofstrasse 66
5605 Dottikon - Switzerland
Tel. +41 (0)56 616 95 95
Fax +41 (0)56 616 95 97
www.egrosuisse.ch
info@egrosuisse.ch

USA/CANADA
RancilioGroup North America Inc.
1340 Internationale Parkway / Suite 200
Woodridge, IL 60517 - U.S.A.
Ph: +1 630 914 7900
Fax: +1 630 914 7901
Toll Free: +1 877 726 2454
www.ranciliogroup.com
info@ranciliogroupna.com