EGRO
SWISS COFFEE TECHNOLOGY

E307060 v.222

SPARE PARTS CATALOGUE

en-US

EGRO 50P (52) SERIES

EGRO 50 SERIES

Index

Table K13120_02 - Front view.....4
Table K11211_02 - Beans Hopper.....6
Table K13119_01 - front with cool BOX.....8
Table K13030_01 - Steam boiler from 11.2007.....10
Table K13125_02 - Steam valve block MLR 4 + 5.....12
Table K13105_01 - Hot Water spout.....14
Table K13106_02 - Steam spout auto shut off.....16
Table K13100_05 - Milk line MLR 4+5 / KS 6 + 7.....18
Table K13100_06 - Milk line MLR 1 + 2 / KB.....20
Table K13100_04 - Coffee and hot Water spout.....22
Table K11120_01 - Grinder.....24
Table K13055_01 - Water pump.....26
Table K11800_01 - Brewing group.....28
Table K13019_01 - hot Water boiler.....30
Table K13106_01 - Steam spout.....34
Table K13106_03 - iSteam spout.....36
Table K13144_01 - drain Water hose with milk.....38
Table K13130_01 - Cold Water valve block to 11.2007.....40
Table K02400_05 - Valves.....42
Table K11000_01 - connecteur.....44
Table K11000_02 - connecteur.....46
Table K11106_01 - Electrical circuits set.....48
Table K11105_01 - Electrical circuits power supplay.....50
Table K03950_01 - Electrical accessories.....52
Table K13305_02 - Electrical circuits set KS 6 + 7.....54
Table K13000_01 - Electrical components.....56
Table K10000_02 - Service + Repair kits.....58
Table A10001_02 - Detergent + lubricant.....60
Table A10001_04 - Special tools.....62
Table K10001_05 - Special tools.....64
Alphanumeric index.....66

K13120_02

Front view

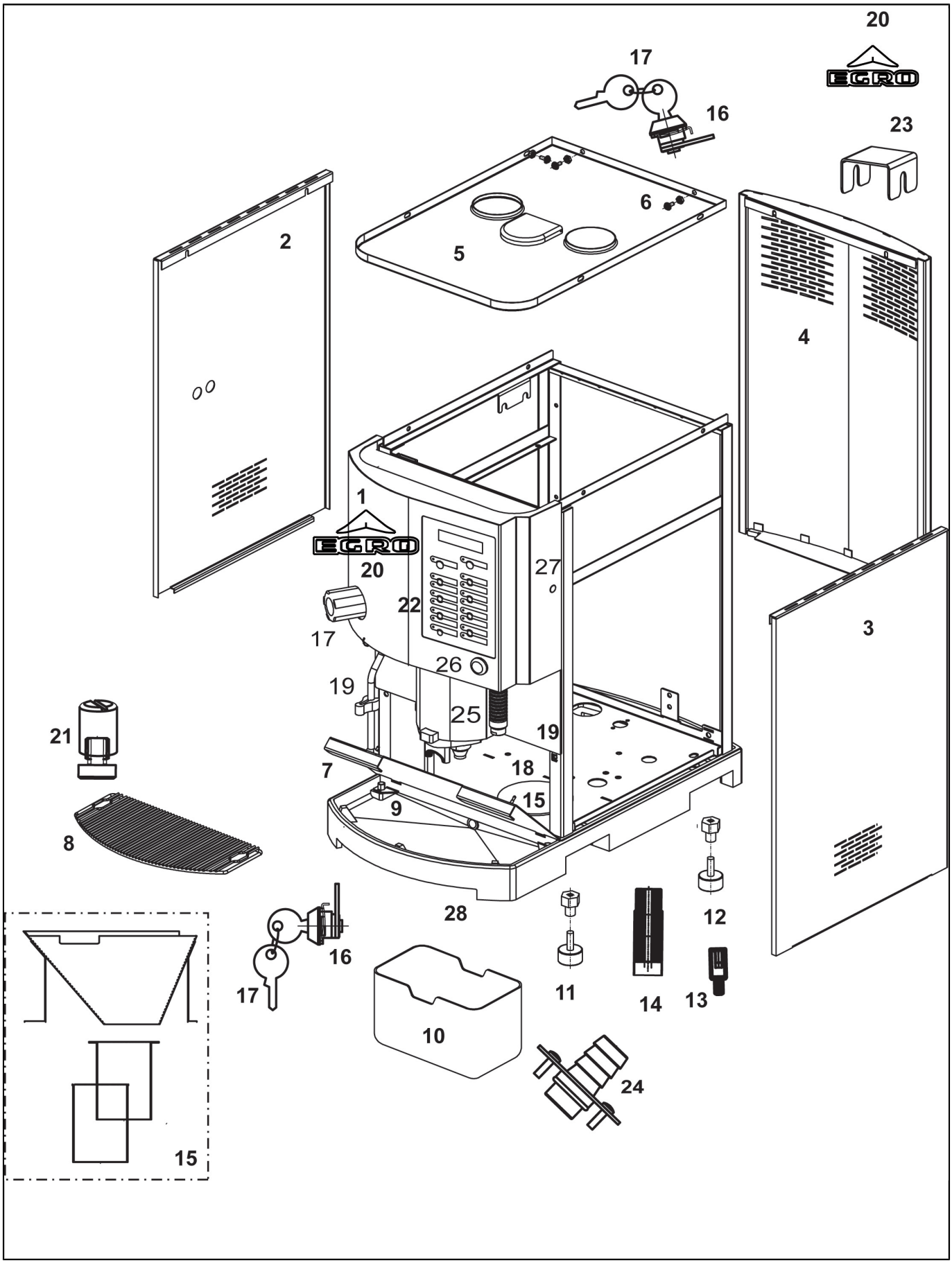

K13120_02

Front view

POS.	CODE	DESCRIPTION	NOTES
1	00054399	FRONT HOUSING WITH STEAM	
	00054411	FRONT HOUSING WITHOUT STEAM	
	00058666	FRONT HOUSING WITH STEAM (USA) AUTO STEAM	
	00100414.002	FRONT HOUSING WITH STEAM (USA) -STEAM	
2	00054401	SIDE PANEL LEFT + RIGHT WITHOUT HOLE	
	00100128.001	side panel left with hole KS	
3	00054401	SIDE PANEL LEFT + RIGHT WITHOUT HOLE	
4	00053804	REAR PANEL	
5	00046201	CUP TRAY, HEATED 1 GRINDER	
	00046289	CUP TRAY, NOT HEATED 2 GRINDERS	
	00046698	CUP TRAY, HEATED 2 GRINDERS	
	00050258	CUP TRAY, NOT HEATED 1 GRINDER	
	00100178.001	CUP TRAY, NOT HEATED 1 GRINDER SELF	
	00100179.001	CUP TRAY, NOT HEATED 2 GRINDERS SELF	
6	00046844	SCREW M4 X 8 MM	
7	00053955	FRONT DRAWER WITHOUT LOCK	
	00053957	FRONT DRAWER WITH LOCK	
	00058519	FRONT DRAWER WITHOUT LOCK (USA)	
	00058827	FRONT DRAWER WITH LOCK (USA)	
8	00054448	DRIP GRID FOR DRAIN TRAY, MIDDLE ASSAY.	
9	00054649	SPACER PIN TO DRIP GRID M 8 X 15 MM	
10	38120121	COFFEE WASTE DRAWER	
11	00004014	RUBBER FOOT, FRONT	
12	00004015	SLIDING FOOT, AFT	
13	00049784	SPACER M 8 X 25 MM	
14	00059234	HIGH LEG (USA)M8 X 130MM	
15	00046865	DREGS SHED ASSAY. RETROFIT KIT	
	00060505	DREGS SHED RETROFIT KIT	
16	10705526	LOCK ASSAY. TO DRAWER	
	10705526	LOCK ASSAY. TO DRAWER	
	10705528	RONIS LOCK	
	10705529	LOCK ASSAY. RONIS M15X17,5 WITH HOOK 25.5MM	
17	00054306	HANDLE ASSAY.	
18	38221018	CAP D. 85.7 MM	
19	00053669	CLIP FOR WAST DRAWER	
20	45010208	EGRO LOGO	
	45010209	EGRO LOGO	
21	00055557	CUP GUIDE SET	
22	00100053.005	KEYBOARD FOIL, 5 PRODUCTS (FROM 06)	
	00100053.009	KEYBOARD FOIL, 9 PRODUCTS (FROM 06)	
	00100053.015	KEYBOARD FOIL, 15 PRODUCTS (FROM 06)	
23	00056843	CONNECTING METAL	
24	00040404	O-RING 15 X 2	
	00056544	SERVICE KIT TO DRAIN CONNECTION	
25	00047041	COVERTO COFFEE SPOUT	
	00055313	COFFEE SPOUT COVER FOR THE SQUEESING VALVE	
26	00039817	KEY TO SWITCH	
	00040613	KEY LOCK SWITCH ASSAY.	
27	00001185	RECESSED COUNTERSUNK HEAD SCREW M5 X 10 MM	
28	00044928	BOTTOM PLATE	

K11211_02

Beans Hopper

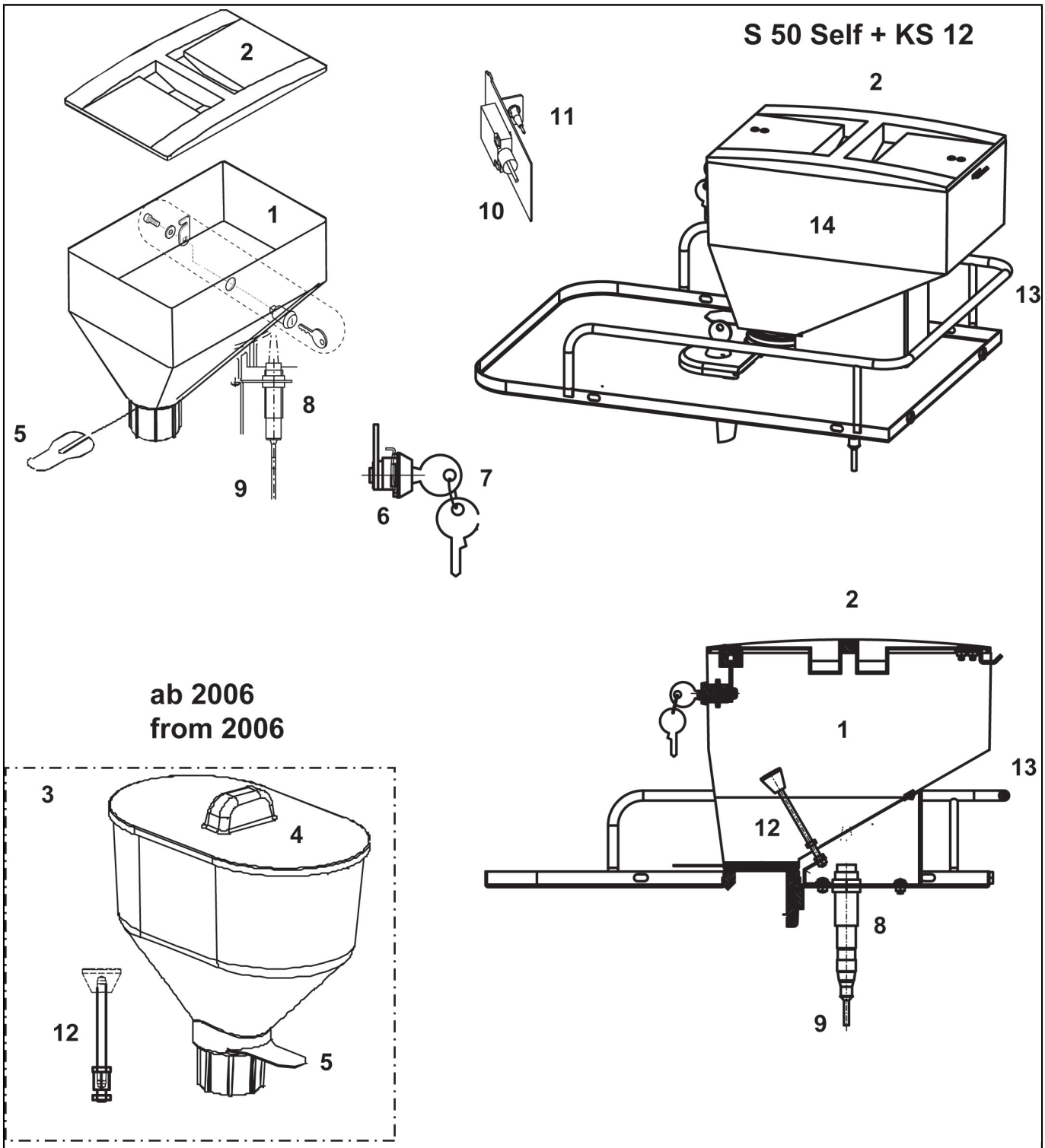

K11211_02

Beans Hopper

POS.	CODE	DESCRIPTION	NOTES
1	00045198	BEAN HOPPER WITHOUT LOCK	
	00048046	BEAN HOPPER WITH LOCK	
2	00045199	COVER FOR BEANS HOPPER WITHOUT LOCK	
	00048048	COVERFOR BEANS HOPPER WITH LOCK	
	00056782	BEAN HOPPER WITH LOCK KS 12	
	00058510	COVERFOR BEANS HOPPER WITHOUT LOCK (STAINLESS STEE	
3	00100035.001	BEAN HOPPER	
	00100119.001	BEAN HOPPER WITHOUT LOCK	
	00100140.001	BEAN HOPPER WITH LOCK	
4	00100079.001	COVERFOR BEANS HOPPER	
5	00047026	SLIDER, BEANS HOPPER	
6	10705528	RONIS LOCK	
	10705529	LOCK ASSAY. RONIS M15X17,5 WITH HOOK 25.5MM	
7	10705530	LOCK 90 LEFT M15 X 17,5 WITH HOOK 25,5	
8	00049538	BEAN SENSOR REFLECTOR SWITCH	
9	00049852	BEANS SENSOR CABLES	
10	00050117	MILK SENSOR WITH CIRCUIT SET	
11	00040730	BATTERY TO LCD THERMOME. 1.5V LR44	
	00049510	DIGITAL LCD THERMOMETER C	
12	00056784	SAFEGUARD BAR	
	00100138.001	SAFEGUARD SCREW MOUNTING	
13	00048691	CUPS BORDER	
14	00056784	SAFEGUARD BAR	

K13119_01

front with cool BOX

Serie 50xx

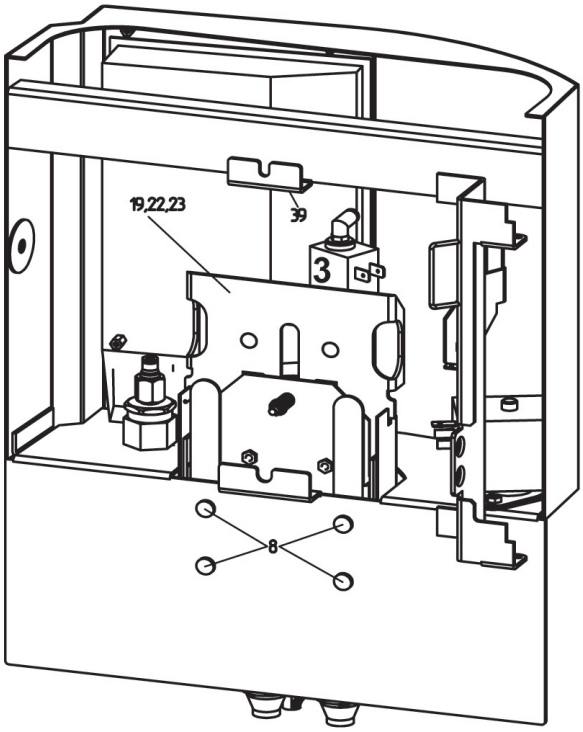

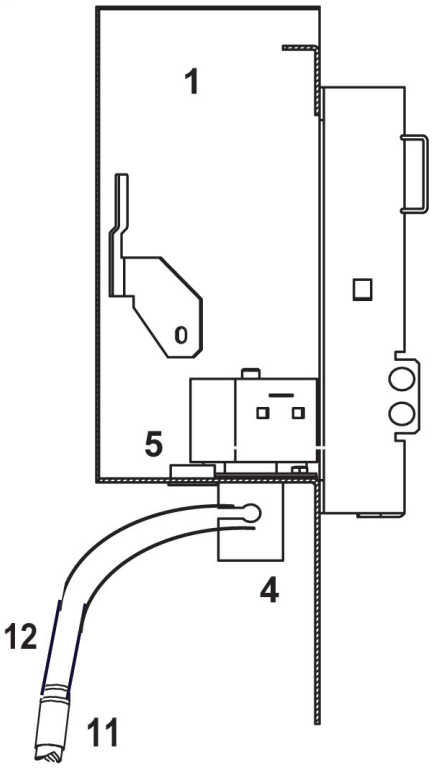

Serie 50xxP

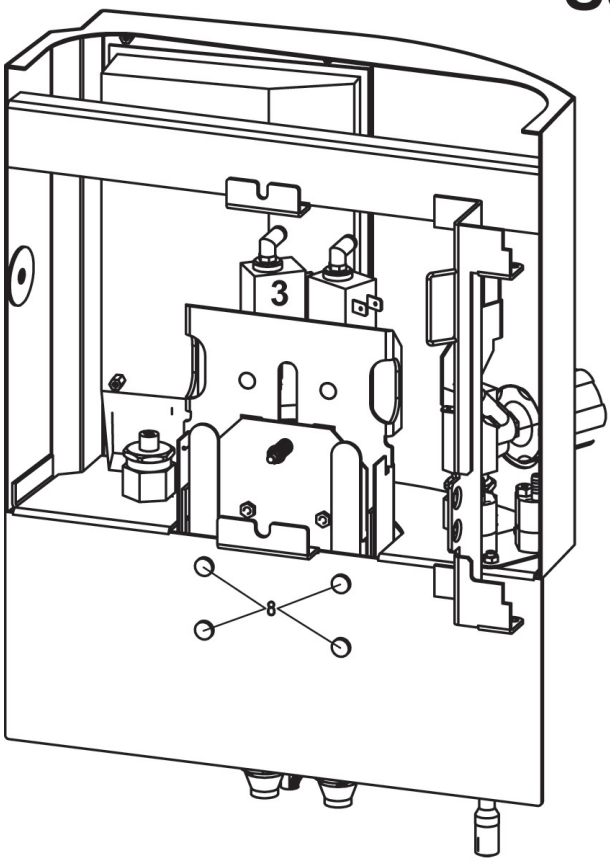

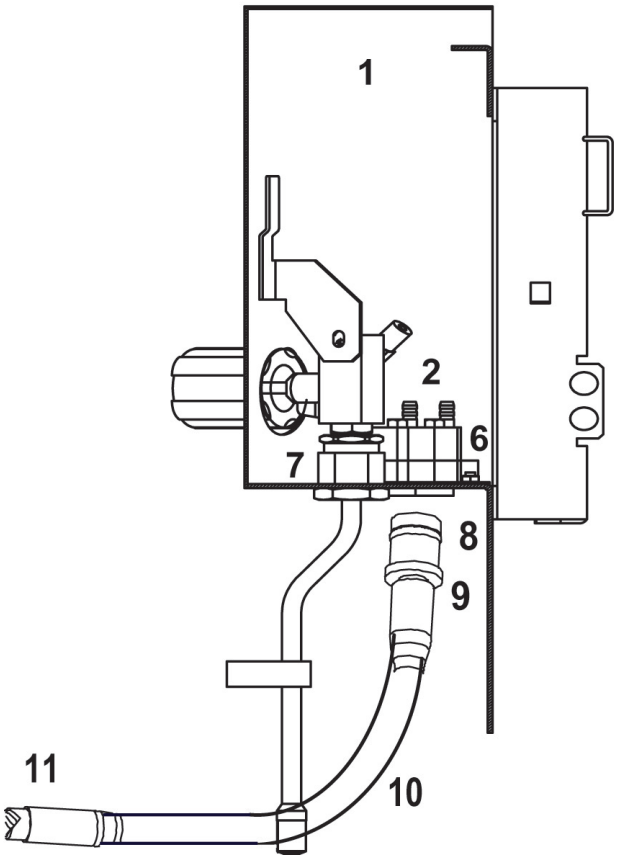

K13119_01

front with cool BOX

POS.	CODE	DESCRIPTION	NOTES
1	00054399	FRONT HOUSING WITH STEAM	
	00054411	FRONT HOUSING WITHOUT STEAM	
2	00049015	DISTRIBUTING BLOCK ASSAY. KS	
3	00054907	ELECTROVALVE AXIAL 2 WAY (ACL) 6.5W	
4	00055455	PINCH VALVE BIG 7.9MM	
5	00003747	COVER (MACHINE WITHOUT TEA OR STEAM)	
6	00100082.003	HOLDER FOR DISTRIBUTING BLOCK	
7	00100096.001	HOLDER WITH 2 DISTRIBUTING BLOCKS	
8	00100038.001	O-RING 8,73 X 1,78 MVQ	
9	00043884	CLUTCH NIPPLE	
10	00054450	SUCTION HOSE ASSAY. KB	
	00060162	SILICON HOSE BLUE (KB) 50SHORE D. 7,0 X 4,0 MM	
11	10700005	REDUCTION KIT	
	23000196	SUCKING NOZZLE	
	38120128	RESTRICTION RING BIG BLACK	
12	00055512	SUCTION HOSE ASSAY. KB (5112)	
	00060162	SILICON HOSE BLUE (KB) 50SHORE D. 7,0 X 4,0 MM	

K13030_01

Steam boiler from 11.2007

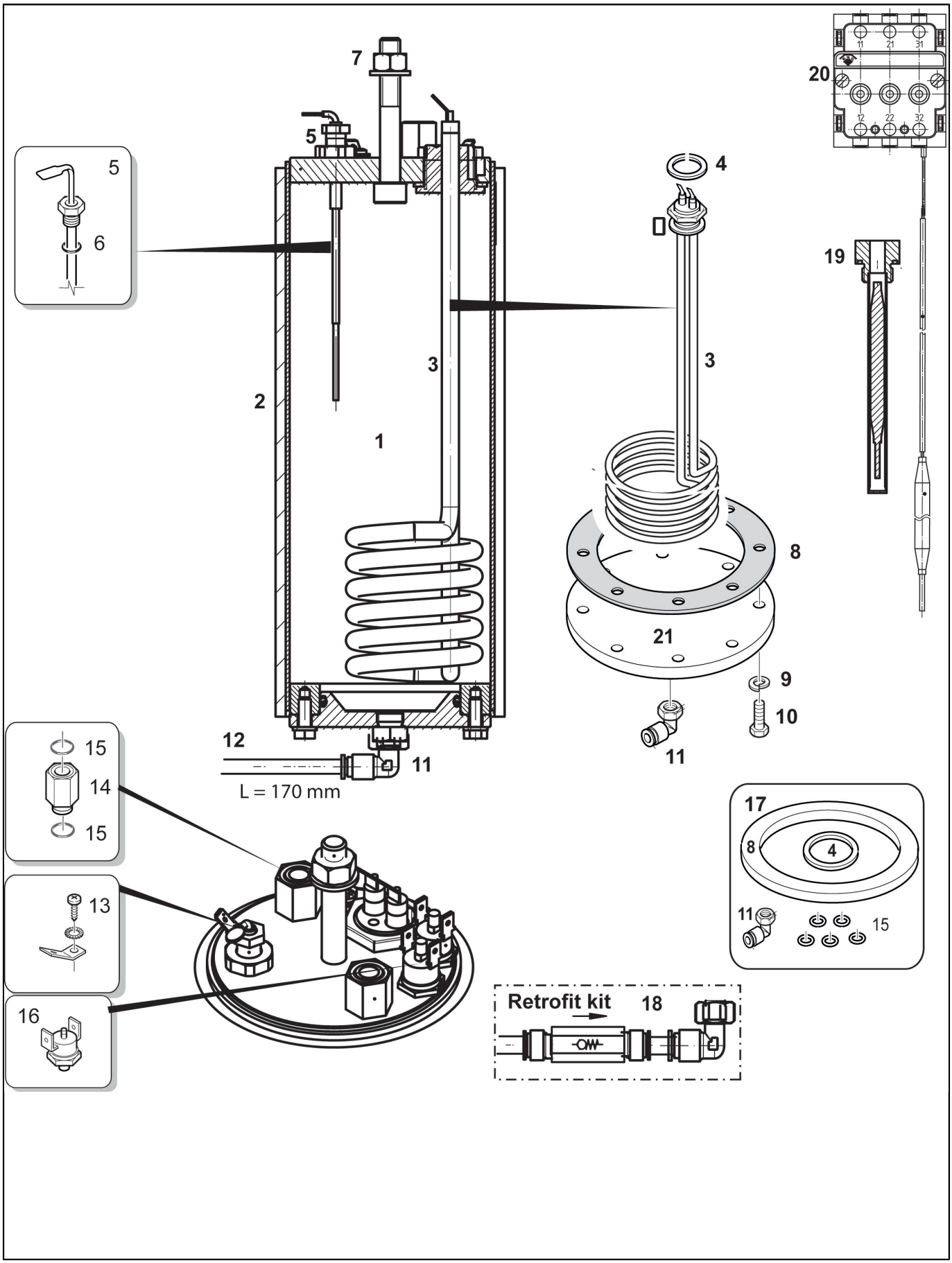

K13030_01

Steam boiler from 11.2007

POS.	CODE	DESCRIPTION	NOTES
1	00054076	BOILER ASSAY. 230 V 3 KW	
	00058548	BOILER ASSAY. 208 V 3 KW (USA)	
2	36901955	STICKY TAPE 3M 50MMX55MT	
	69000417	STEAM BOILER INSULATION	
3	00012077	6-EDGE NUT M26 X 1,5 MM	
	00056751	GUINDING PIN D.8X8	
	00100081.001	HEATING ELEMENT 208V 3 KW WITH WASHER (USA)	
	10701254	HEATING ELEMENT/15 230V/3KW+GASKET ONE-S50	
4	36201035	GASKET STEAM BOILER RESISTANCE GARLOCK EGRO ONE	
5	00100268.002	LEVEL SENSOR 140 MM WITH GASKETG1/4	
6	00002240	O-RING 14 X 1,78 EPDM 70SH	
7	00001484	NUT M10	
	00001894	WASHER D. 8,4/16/1,6	
8	00100351.001	GASKET STEAM BOILER	
9	37420601	ELASTIC WASHER D. 6	
10	00017151	HEX SOCKET SCREW STAINLESSM6 X 20 MM	
11	69200141	ELBOW CONNECTOR G1/4X6 PPSU	
12	38228073	TEFLON HOSE FOP D. 6 X 4 MM	
13	34160024	LAMELLAR CONTACT	
	37030408	SCREW M 4 X 8	
	37430400	OUTER TOOTHED WASHER D4	
14	00100267.001	STEAM CONNECTION	
15	36404054	O-RING 12,42 X 1,78 V 70SH 2050	
16	00100300.001	TEMPERATURE LIMITER 140 C	
17	10700998	SERVICE KIT STEAM BOILER	
18	00053754	THREADED ELBOW, MALE D. 6 MM X G1/8	
	00054067	CHECKVALVE D. G 1/8	
	00100380.001	RETROFIT KIT BOILER FILLING BELOW	
	69200134	FAST STRAIGHT CONNECTOR G1/8 X 4	
19	00100295.001	TEMPERATURE LIMITER GUIDE (USA)	
20	00058837	TEMPERATURE LIMITER 144 C (USA)	

K13125_02

Steam valve block MLR 4 + 5

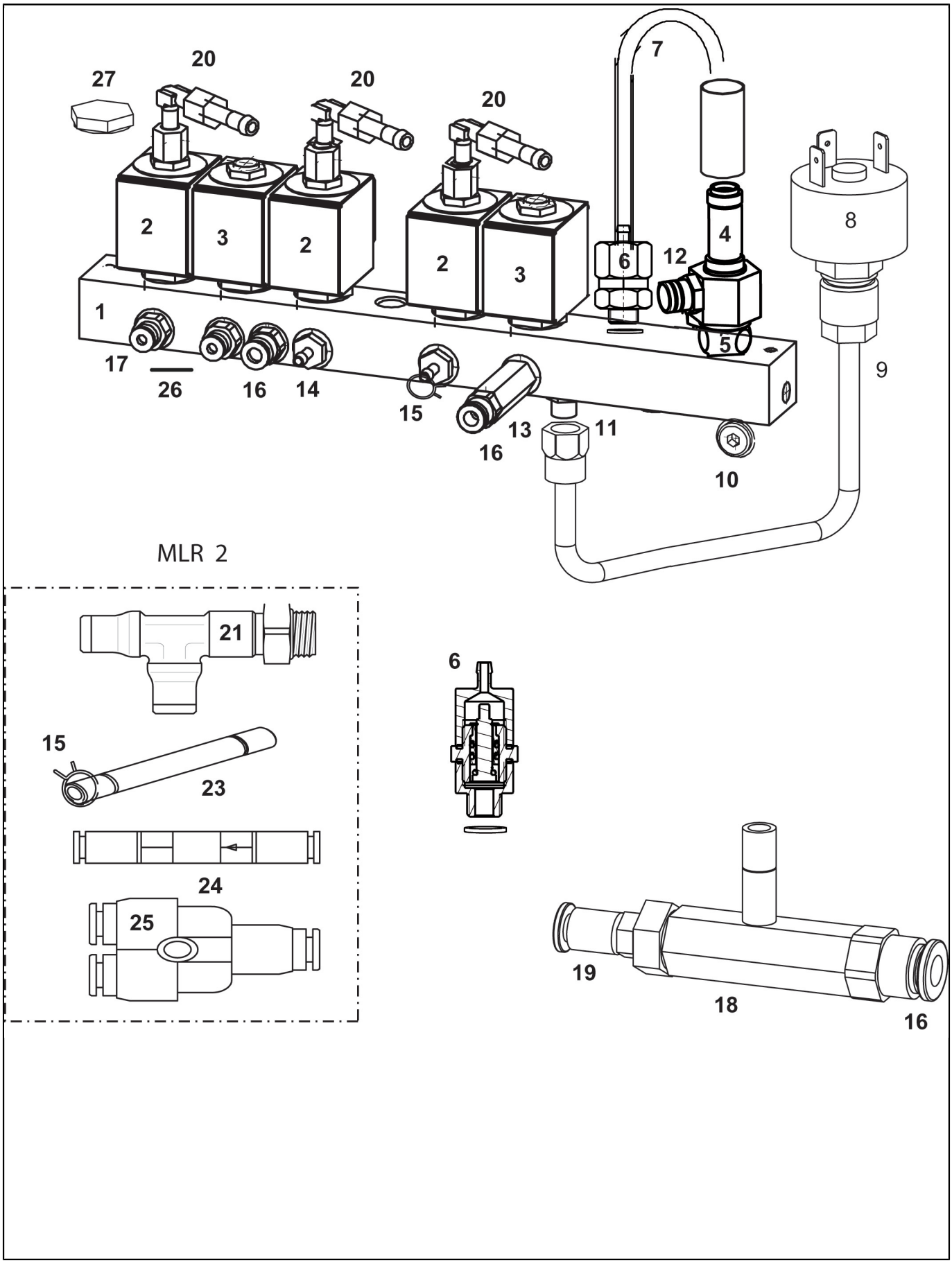

K13125_02

Steam valve block MLR 4 + 5

POS.	CODE	DESCRIPTION	NOTES
1	00060319	STEAM VALVE BLOCK ASSAY.	
	00100264.002	STEAM VALVE BLOCK ASSAY. USA 5513	
2	00100013.001	O-RING 17,17 X 1,78 F	
	00100016.005	PLUNGER 3/2 WAY STEAM T30 (ACL)	
	00100116.005	OPERATOR KIT 3/2 WAYS STEAM (ACL) T30	
3	00100559.001	OPERATOR KIT 2/2 WAY WATER T30 (ACL)	
	00100560.001	PLUNGER 2/2 WAY WATER T30 (ACL)	
4	00039067	RELIEF VALVE, STEAM	
	00045682	SPLASH GUARD-HOSE D. 16,0 X 45,0 MM	
5	00054927	THREADED NIPPLE WITH UNION NUT AND WASHER	
6	00044464	GASKET 16,5 X 13,2 X 1,5 COPPER	
	00100190.050	ANTIVACUUM VALVE ASSAY. RETROFIT KIT	
	10060058	ANTIVACUUM VALVE ONE	
	36130008	SEAT TEFLON NSF	
	36404013	O-RING SILICONE 2031	
	36404053	O-RING 5,28 X 1,78 EPDM	
7	00048474	SILICON HOSE D. 7 X 4 MM	
8	00100290.001	PRESSURE SWITCH 1,5 BAR	
9	10705232	PIPE FOR PRESSURE TRANSDUCER	
10	23000299	CAP G1/8 BOILER ONE/ZERO	
11	00054066	GASKET 13,4 X 10,2 X 1 COPPER	
	00054936	THREADED MALE NIPPLE WITH WASHER	
12	00055795	WIRE HOSE CLIP D. 17,3 MM	
13	00054119	INTERMEDIARY ADAPTER ASSAY.	
14	00054938	THREADED MALE NIPPLE WITH WASHERG 1/8 AND GASKET	
15	39930001	WIRE HOSE CLAMP 68MM	
16	69200135	FAST STRAIGHT CONNECTOR G1/8 X 6	
17	69200134	FAST STRAIGHT CONNECTOR G1/8 X 4	
18	00054115	INJECTION CASE ASSAY.	
19	00060283	O-RING 4 X 1,2 F	
	69200133	FAST STRAIGHT CONNECTOR M5	
20	00057912	THREADED ELBOW, MALED. 6 MM X G1/8	
21	00060285	O-RING 8,25 X 1,63	
23	00055974	DOUBLE PLUG-IN NIPPLE D. 4 MM	
24	00048820	NON-RETURN VALVE M5	
25	00054344	Y-CONNECTION D. 4 MM	
26	36404054	O-RING 12,42 X 1,78 V 70SH 2050	
27	00060160	BRASS CLOSING SCREW	

K13105_01

Hot Water spout

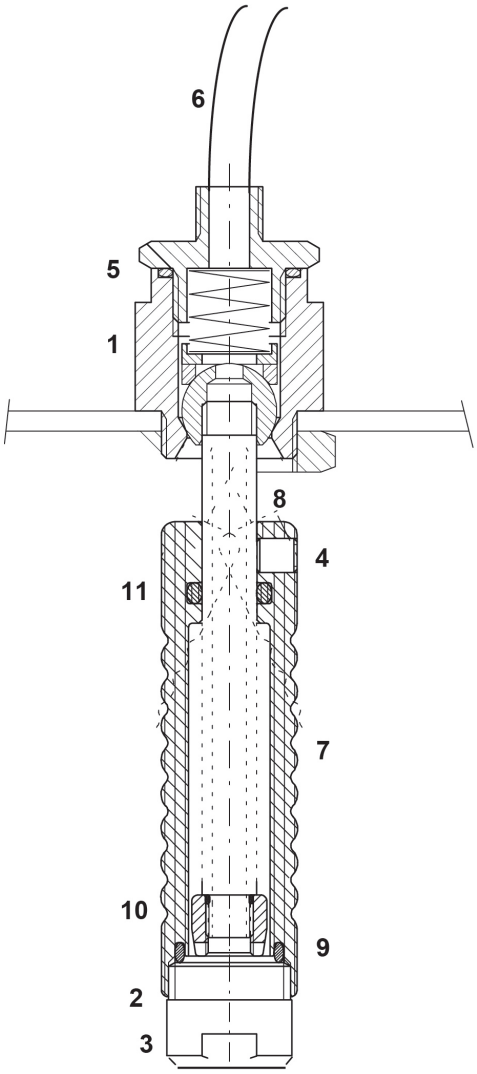

K13105_01

Hot Water spout

POS.	CODE	DESCRIPTION	NOTES
1	00053966	HOT WATER SPOUT ASSAY.	
2	00005295	NEOPERL MIXING NOZZLE G 3/8	
4	00001728	STRAIGHT PIN SCREW M5 X 6 MM	
5	00002250	O-RING 15,6 X 1,78 EPDM 70SH	
6	00054452	CONNECTION HOUSE ASSAY.	
7	00017713	HANDLE ASSAY.	
8	00053965	PIPE	
9	00002240	O-RING 14 X 1,78 EPDM 70SH	
10	00012822	NUTM7 X 0,75 MM	
11	00002205	O-RING 7,59 X 2,62 EPDM 70SH	

K13106_02

Steam spout auto shut off

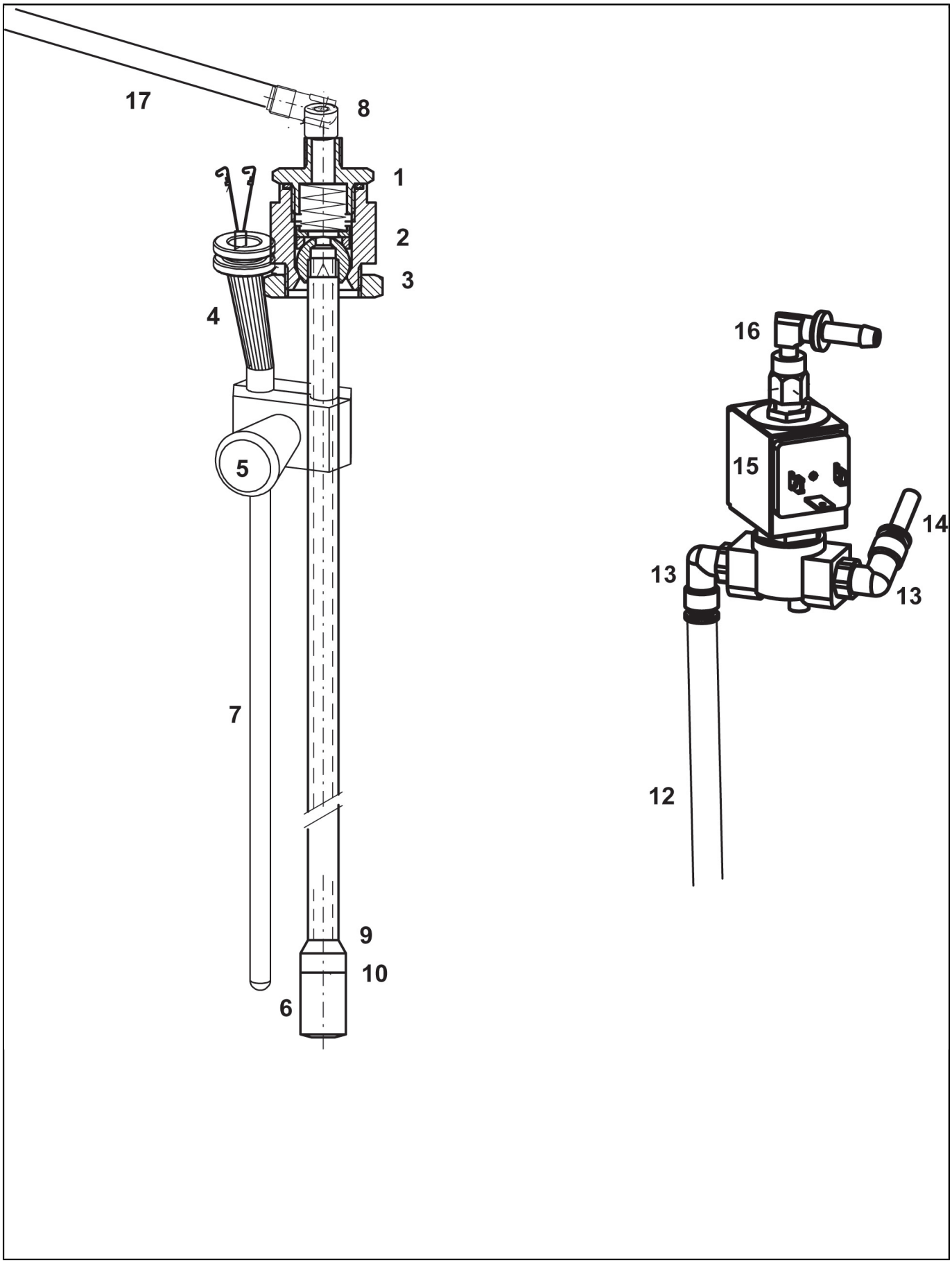

K13106_02

Steam spout auto shut off

POS.	CODE	DESCRIPTION	NOTES
1	00058551	STEAM SPOUT (USA)	
2	00053967	CONNECTOR FOR STEAM NOZZLE	
3	00002569	GASKET TEFLON PTFE	
4	00059036	PROTECTION	
5	00003744	HANDLE	
6	25111006	STEAM NOZZLE	
7	00060120	STEAM SENSOR ASSAY.	
8	00002250	O-RING 15,6 X 1,78 EPDM 70SH	
9	00002195	O-RING 5 X 1 EPDM 70SH	
10	00002207	O-RING 8 X 1 EPDM	
12	00053967	CONNECTOR FOR STEAM NOZZLE	
13	00053754	THREADED ELBOW, MALE D. 6 MM X G1/8	
14	69200134	FAST STRAIGHT CONNECTOR G1/8 X 4	
15	00100016.005	PLUNGER 3/2 WAY STEAM T30 (ACL)	
	00100116.005	OPERATOR KIT 3/2 WAYS STEAM (ACL) T30	
	00100201.001	ELECTROVALVE 3/2 WAYS T 30	
16	00057912	THREADED ELBOW, MALED. 6 MM X G1/8	
17	38228073	TEFLON HOSE FOP D. 6 X 4 MM	

K13100_05

Milk line MLR 4+5 / KS 6 + 7

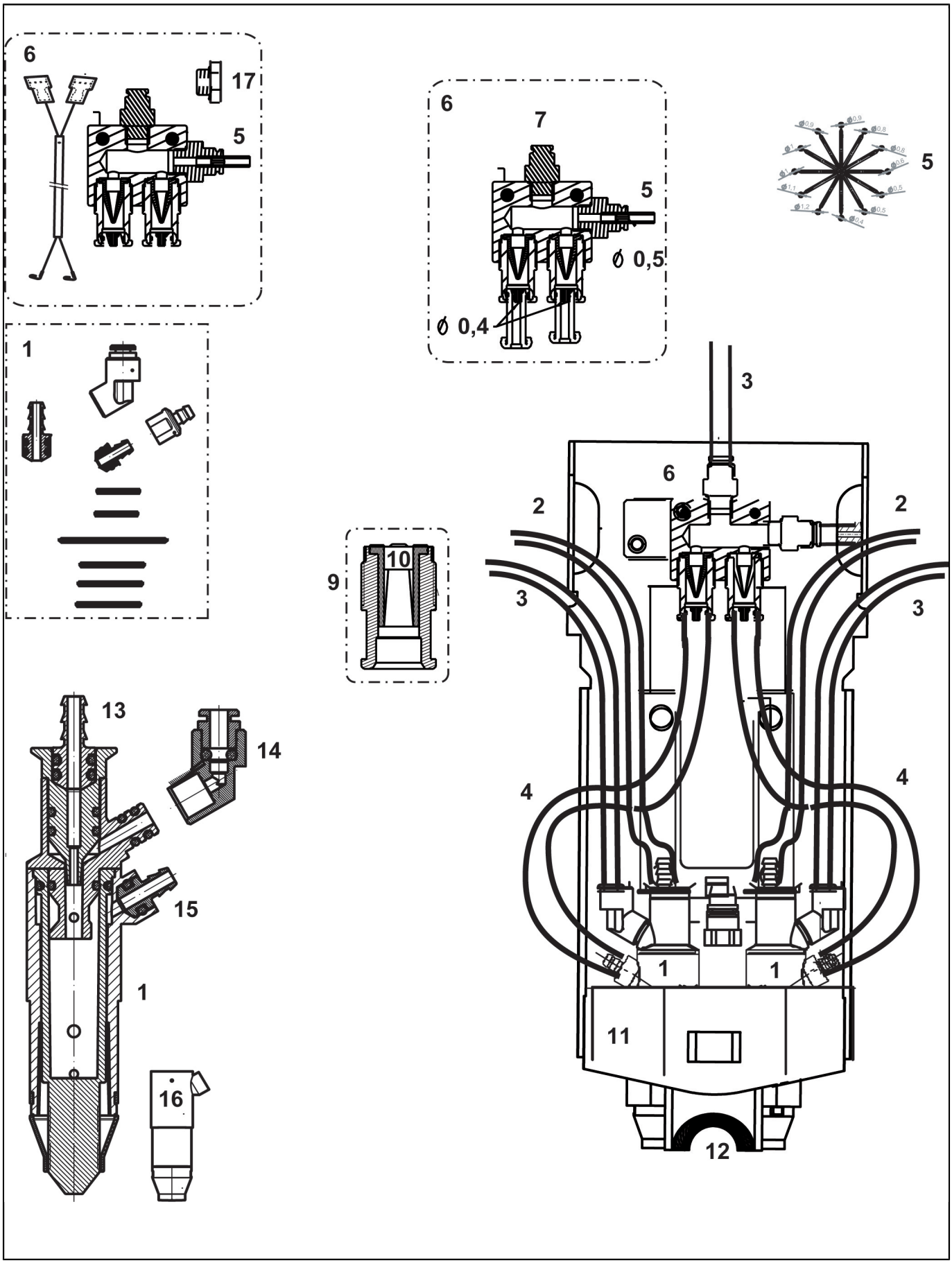

K13100_05

Milk line MLR 4+5 / KS 6 + 7

POS.	CODE	DESCRIPTION	NOTES
1	00056913	O-RING KIT FROTHER HEAD	
	00100064.001	MIXER KIT	
2	00049037	SILICON HOSE PINK D. 6,0 X 3,0 MM	
3	38228072	TEFLON HOSE FOP D. 4,0 X 2,5 MM	
4	00050010.001	SILICON HOSE D. 6,0 X 3,0 MM	
5	38120127	RESTRICTION RING LITTLE WHITE	
6	00060330	RETROFIT KIT AIR VALVE KS	
	10705811	AIR VALVE TOP MILK	
7	69200134	FAST STRAIGHT CONNECTOR G1/8 X 4	
9	38120106	VALVE INSERT DUCKBILL	
10	36230017	DUCKBILL	
11	00047079	COFFEE SPOUT HOUSING	
12	00047077	FLOW CUP SELF	
	00047078	FLOW CUP STANDARDT	
13	00100062.002	STEAM CONNECTION	
14	00100042.001	CONNECTOR MILK	
15	00100063.001	CONNECTOR AIRE	
16	00100029.001	INSERT NIPPLE FOR FROATHER HEAD	
	00100336.001	MIXER HOUSING	
17	69200132	CAP G1/8 AISI 316	

K13100_06

Milk line MLR 1 + 2 / KB

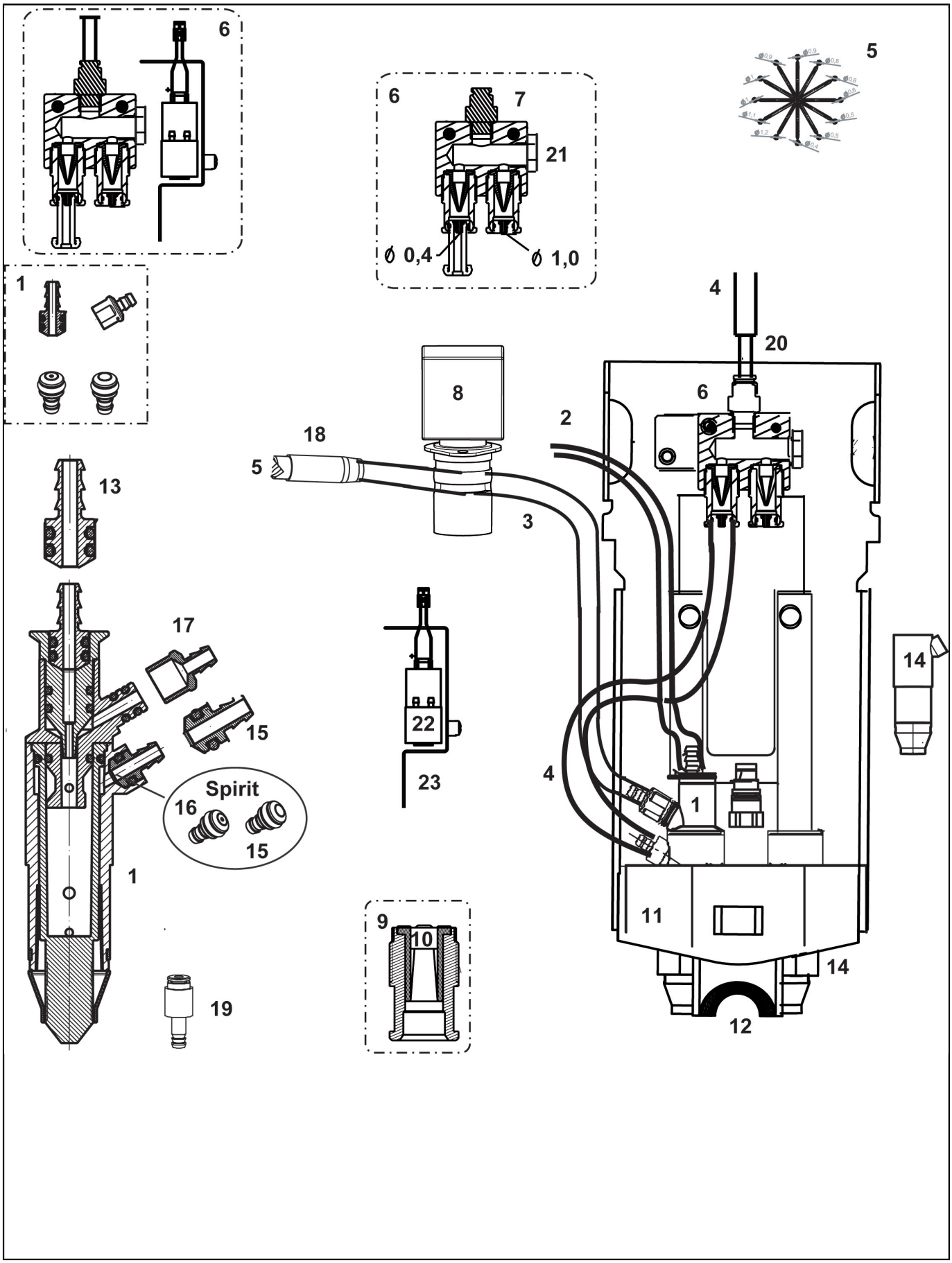

K13100_06

Milk line MLR 1 + 2 / KB

POS.	CODE	DESCRIPTION	NOTES
1	00056914	O-RING KIT FROTHER HEAD SPIRIT/ARCO	
	00100064.001	MIXER KIT	
2	00049037	SILICON HOSE PINK D. 6,0 X 3,0 MM	
3	00060162	SILICON HOSE BLUE (KB) 50SHORE D. 7,0 X 4,0 MM	
4	00050010.001	SILICON HOSE D. 6,0 X 3,0 MM	
5	38120127	RESTRICTION RING LITTLE WHITE	
6	00060331	RETROFIT KIT AIR VALVE KB	
	10705810	AIR VALVE QUICK MILK	
7	69200134	FAST STRAIGHT CONNECTOR G1/8 X 4	
8	00055455	PINCH VALVE BIG 7.9MM	
9	38120106	VALVE INSERT DUCKBILL	
10	36230017	DUCKBILL	
11	00047079	COFFEE SPOUT HOUSING	
12	00047077	FLOW CUP SELF	
	00047078	FLOW CUP STANDARDT	
13	00100062.002	STEAM CONNECTION	
14	00100042.001	CONNECTOR MILK	
	00100336.001	MIXER HOUSING	
15	00100063.001	CONNECTOR AIRE	
16	00100029.010	Plug-in nipple without borehole	
17	00100032.001	CONNECTOR MILK	
18	10700005	REDUCTION KIT	
19	00060151	HOSE FITTING TEFLON - SILIKON	
20	00055974	DOUBLE PLUG-IN NIPPLE D. 4 MM	
21	00054935	LOCKING CAP WITH SEALG 1/8	
22	00054935	LOCKING CAP WITH SEALG 1/8	
	00100743.001	AIR PUMP	
23	32331436	AIR PUMP BRACKET ONE	

K13100_04

Coffee and hot Water spout

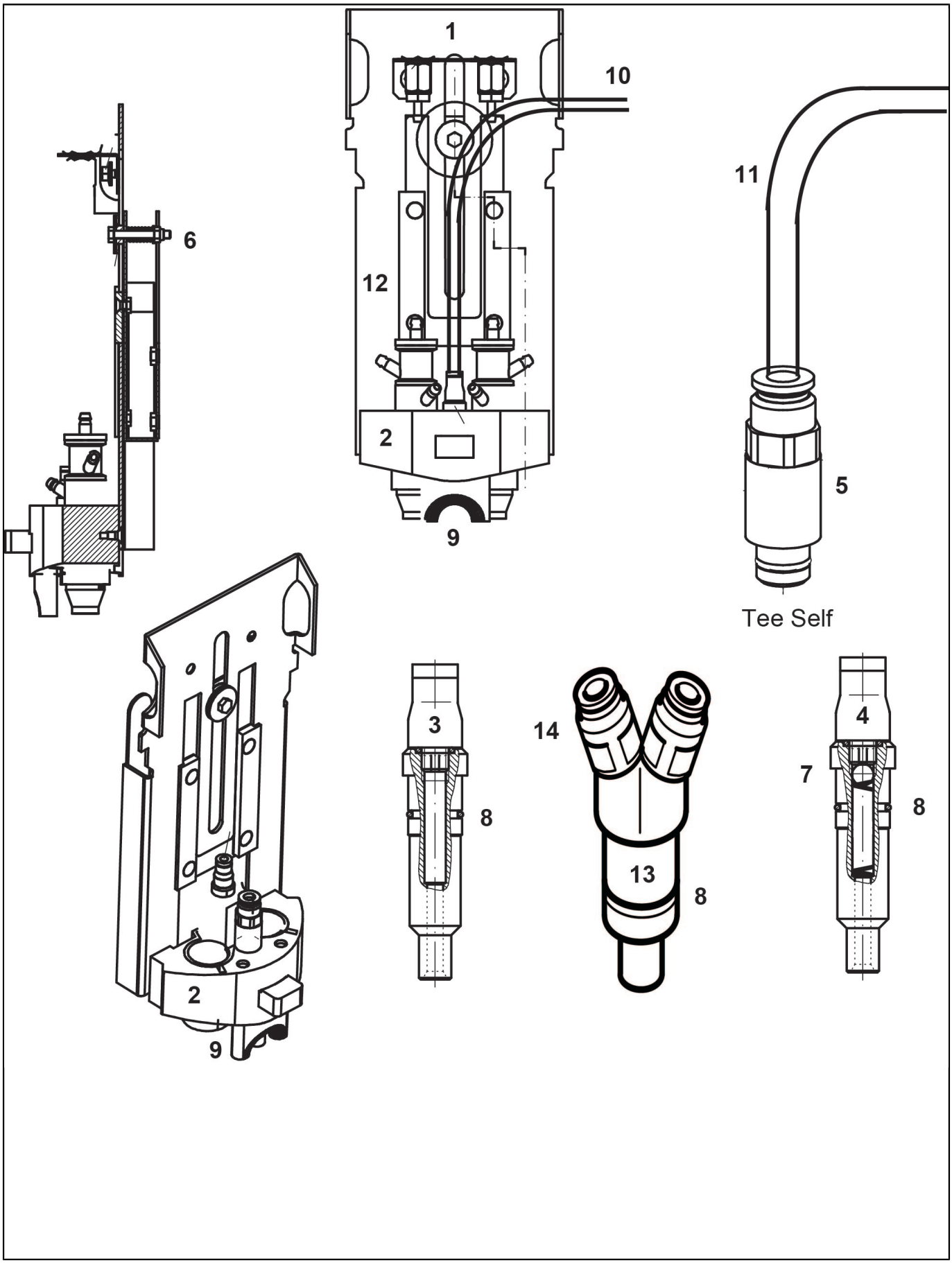

K13100_04

Coffee and hot Water spout

POS.	CODE	DESCRIPTION	NOTES
1	00055445	COFFEE SPOUT ASSAY.	
2	00047079	COFFEE SPOUT HOUSING	
3	00050096	COFFEE SPOUT WITHOUT CHECKVALVE	
4	00047934	PRESSURE VALVE	
5	00054647	HOT WATER SPOUT BY SELF SERVICE	
6	00054944	SCREW WITH SPRING ASSAY.	
7	00047960	GLASS-BALL, CHECKVALVE 4.0MM	
8	00002207	O-RING 8 X 1 EPDM	
9	00047077	FLOW CUP SELF	
	00047078	FLOW CUP STANDARDT	
10	38228071	TEFLON HOSE FEP D. 4 X 2 MM	
11	38228073	TEFLON HOSE FOP D. 6 X 4 MM	
12	00055444	GLIDER ASSAY.	
13	00050095	PRESSURE VALVE BY PASS	
14	69200133	FAST STRAIGHT CONNECTOR M5	

K11120_01

Grinder

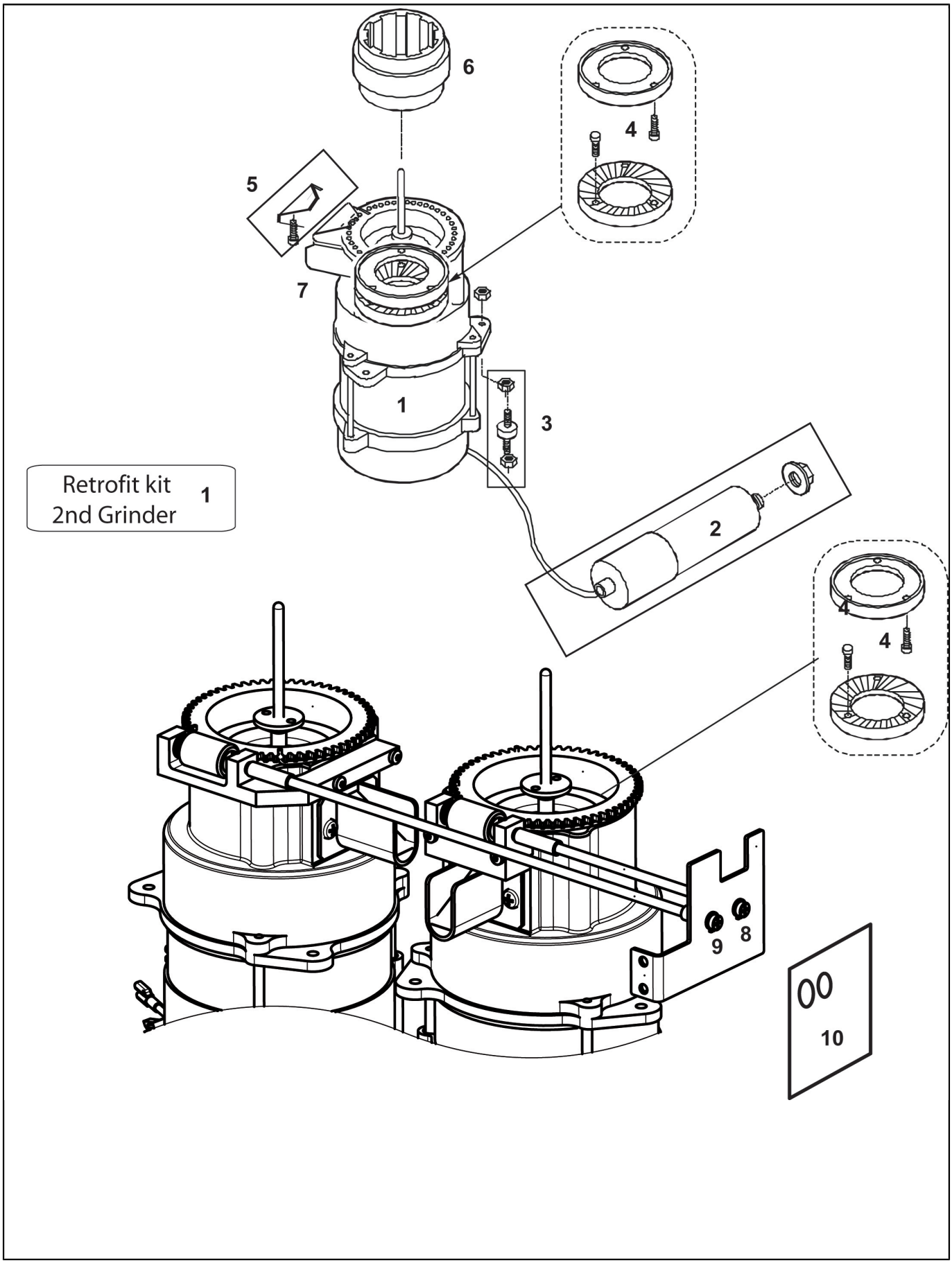

K11120_01

Grinder

POS.	CODE	DESCRIPTION	NOTES
1	00045821	RETROFIT KIT 2 GRINDER	
	00045823	RETROFIT KIT 2 GRINDER SELF	
	00060119	GRINDER ASSAY. 220V - 50/60HZ - 1 PH	
2	00029039	CAPACITOR 12.5MF	
3	00054909	3 VIBRATION ABSORBER WITH NUTS	
4	00046933	GRINDER PLATES, PAIR D. 54MM WITH SCREW	
5	00054911	LOCKING PLATE	
6	00045427	SEAL (COLLAR) / GRINDER	
7	00100182.003	POWDER TUBE (RAOASTING PLANT)	
	00100565.001	POWDER SPOUT(STANDARD)	
8	00100505.001	FLEXIBEL AXLE SHORT	
9	00100505.002	FLEXIBEL AXLE LONG	
10	00100521.001	STICKER	

K13055_01

Water pump

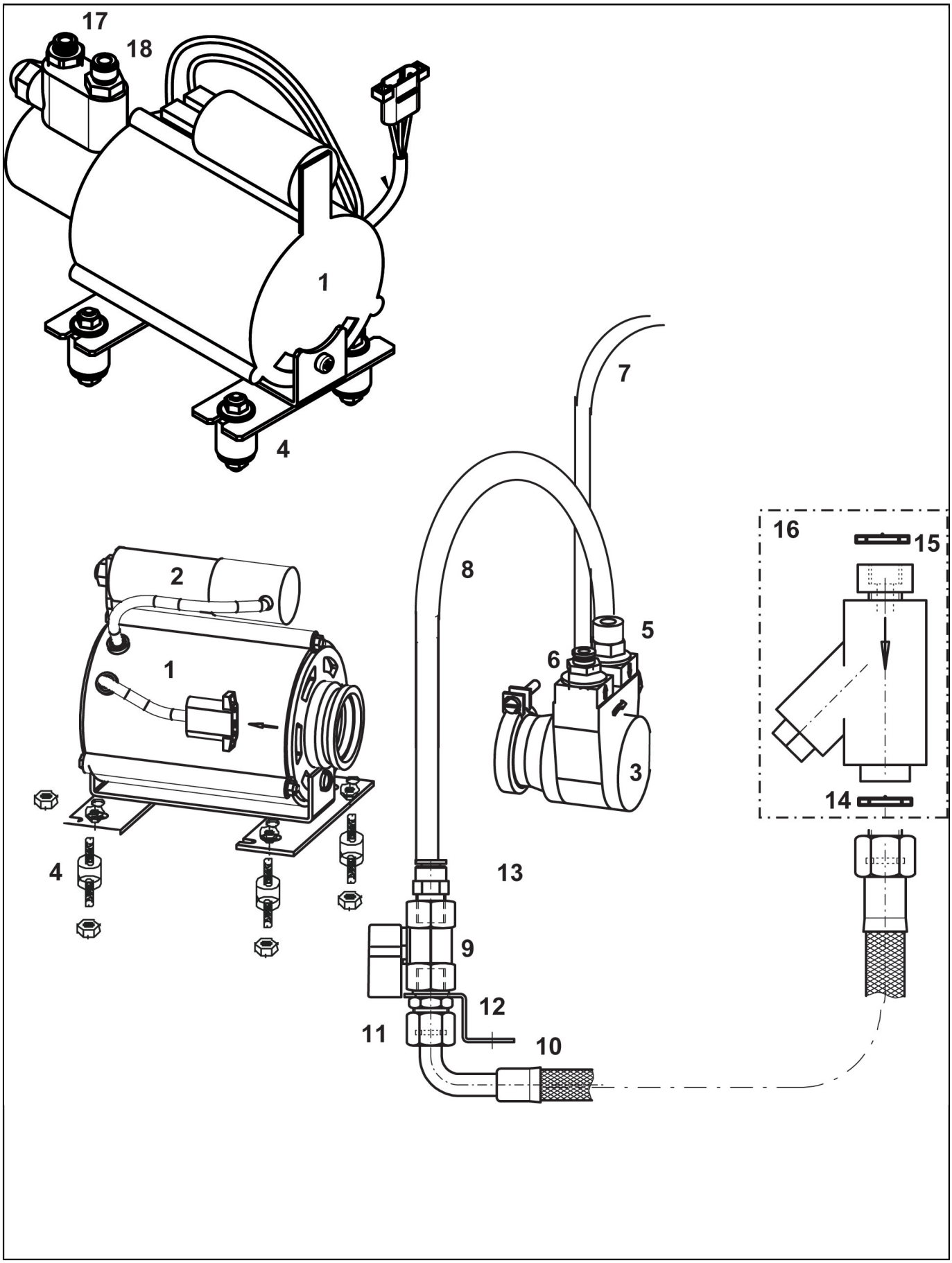

K13055_01

Water pump

POS.	CODE	DESCRIPTION	NOTES
1	00045393	PUMP MOTOR 230 V / 50 HZ - 120 W	
	00046299	MOTOR 200 V	
	00100367.001	PUMP MOTOR ASSAY. 230 V 50/60 HZ (USA)	
2	00042324	CAPACITOR ASSAY. 7.0 MF 200V	
	34020017	CONDENSER 6,3 MF.LT	
3	69000288	PUMP VM 100L/H ONE	
4	36322006	VIBRATION ABSORBER 20 X 20 M 6 X 12 SH30	
5	69200138	STRAIGHT CONNECTOR G3/8 X 8	
6	69200136	STRAIGHT NIPPLE M6 X G3/8	
7	38228073	TEFLON HOSE FOP D. 6 X 4 MM	
8	38228074	TEFLON HOSE FEP D. 8 X 6 MM	
9	69200131	BALL TAP G1/4	
10	00058505	REINFORCED HOSE G 3/8 L = 300 MM	
	00100248.002	REINFORCED HOSE G 3/8 X 1500MML = 150 MM	
11	23000288	DOUBLE NIPPLE G3/8 X G1/4	
12	00058587	GASKET 15 X 7,2 X 2,1 RUBBER EPDM PEROX	
13	69200137	STRAIGHT NIPPLE M8 X G1/4	
14	00019974	GASKET 14,8 X 9 X 2 COPPER	
15	00002752	FLAT SEAL 18 X 13,5 X 2	
16	00004415	PRESSURE REGULATOR	
	00046902	WATER FILTER ASSAY.	
17	00041493	THREADED MALE NIPPLE D. R 3/8 X G 1/4	
18	00058468	THREADED MALE NIPPLED. 6 X G 3/8	

K11800_01

Brewing group

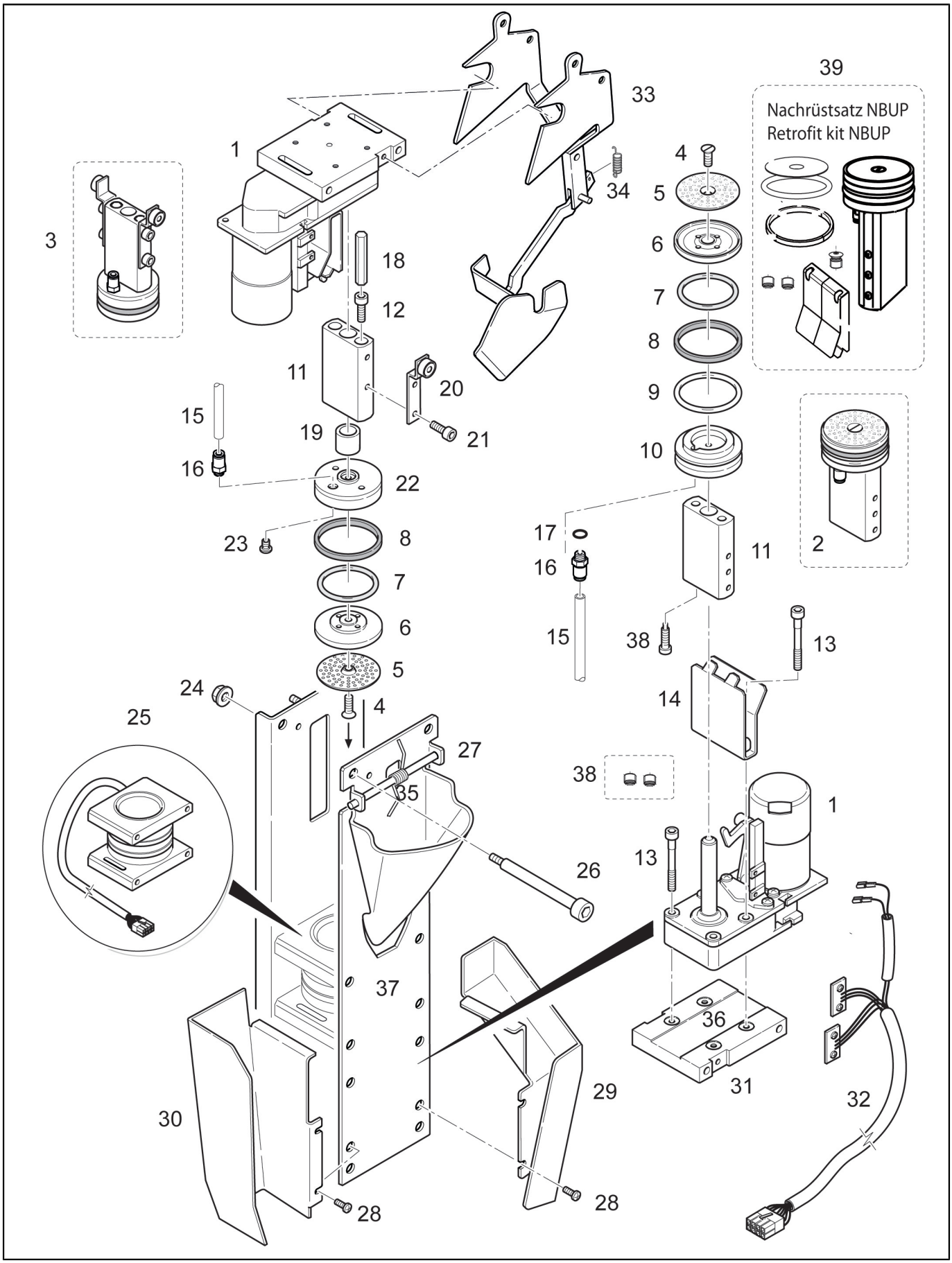

K11800_01

Brewing group

POS.	CODE	DESCRIPTION	NOTES
1	10705939	SPINDLE MOTOR+PLATE ONE L61	
	34010009	SPINDLE MOTOR 24V 61 MM	
2	00052938	PISTON ASSAY. BOTTOM (STEEL) D. 44 MM	
	00055389	PISTON ASSAY. BOTTOM (PEEK) D. 44 MM	
	00100510.001	LOWER BREWING PISTON NBUP D. 44,0MM	
3	00055400	UPPER PISTON ASSAY.	
	00100514.001	UPPER PISTON ASSAY. NBUP D. 44,0MM	
4	00001176	COUNTERSUNK SCREW M4 X 12 MM	
5	00060116	BREWING SIEVE D. 44 MM	
6	00054861	FILTER CARRIER	
7	00100136.001	O-RING 31,35 X 3,53 SILICONE RED	
8	00039064	TURCON RING 32 X 44 X 4,2	
9	00100506.001	O-RING 36,09 X 3,53 SILICONE 70SH	
10	36930110	LOWER PISTON GR. BC18	
11	10701050	PISTON SHAFT WITH MAGNET	
12	00000930	HEX SOCKET HEAD SCREW M5 X 25 MM	
13	00000935	HEX SOCKET HEAD SCREW M5 X 30 MM	
14	00100523.001	PISTON GUIDE PLATE	
15	38228072	TEFLON HOSE FOP D. 4,0 X 2,5 MM	
16	69200133	FAST STRAIGHT CONNECTOR M5	
17	00060283	O-RING 4 X 1,2 F	
18	00045032	NUT	
20	00054433	BRACKET FOR UPPER PISTON	
21	00000928	HEX SOCKET HEAD SCREW M4 X10 MM	
22	36930111	UPPER PISTON GROUP BC18	
23	00048550	FLOW LIMITER D. 0.7MM	
24	00001521	KEPS NUT M5	
25	00054087	BREWING CYLINDER ASSAY. WITH HEATER	
26	00001518	KEPS NUT M4	
	00054080	BOLT M4	
	00054940	BOLT WITH NUT M4	
27	00060858	TRANSMISSION ASSAY.	
28	00046844	SCREW M4 X 8 MM	
29	10705718	SHUTE	
30	00048747	GROUNDS SLIDE	
31	00053748	DRIVE PLATE	
32	00053602	SPINDLE-MOTOR WIRING WITH HALL SENSOR	
33	00057101	EJECTOR ASSAY.	
34	00053559	SPRING	
35	00053560	SPRING	
36	00054220	GUIDING PIN	
37	00100525.001	BREWING GROUP ASSY.	
38	23000197	WASHER GR S70	
39	00061030	NBUP RETROFIT KIT	

K13019_01

hot Water boiler

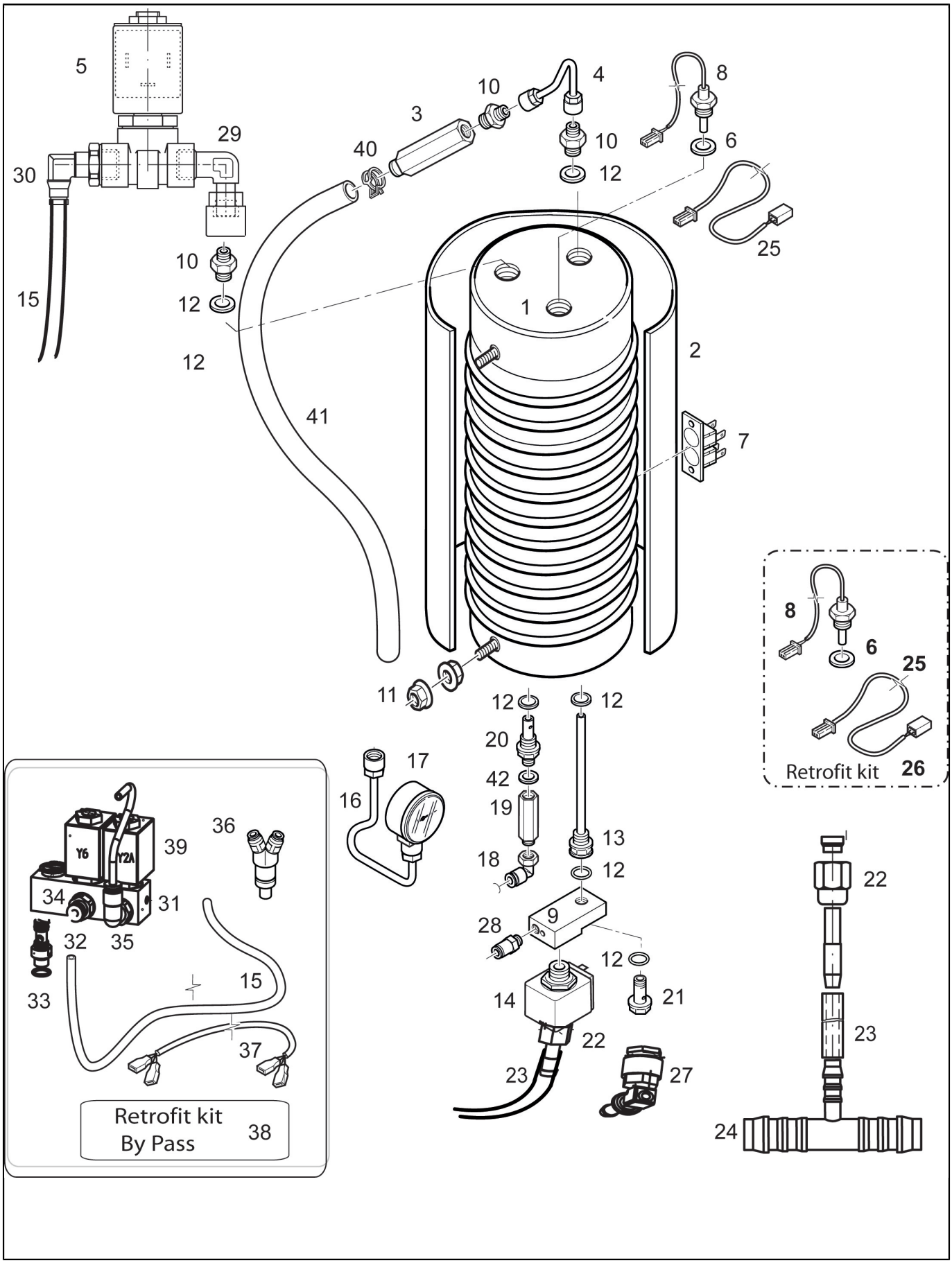

K13019_01

hot Water boiler

POS.	CODE	DESCRIPTION	NOTES
1	00054238	COFFEE BOILER ASSAY. 3 KW	
2	00054429	INSULATION WITH ADHESIVE TAPE	
	36901955	STICKY TAPE 3M 50MMX55MT	
3	10060605	PRESSURE RELIEF VALVE 12 X G1/4	
4	10705185	PRESSURE RELIEF VALVE WITH PIPE	
5	00054430	ELECTROVALVE HOT WATER SERIES 52	
	00100559.001	OPERATOR KIT 2/2 WAY WATER T30 (ACL)	
	00100560.001	PLUNGER 2/2 WAY WATER T30 (ACL)	
6	00044464	GASKET 16,5 X 13,2 X 1,5 COPPER	
7	00054915	TEMPERATURE LIMITER 250 C	
	00058836	TEMPERATURE LIMITER 250 C TWIN	
	00100124.001	BLADE RECEPTACLE	
8	00100243.002	TEMPERATURE SENSOR	
9	00053785	ELECTROVALVE BREWING FULL 3/2 WAYS	
10	00054919	DOUBLE NIPPLEG 1/4	
	00100059.001	DOUBLE NIPPLE D. G 1/4 X G 1/4	
11	00001521	KEPS NUT M5	
12	00002240	O-RING 14 X 1,78 EPDM 70SH	
13	00054107	CONNECTION TO BOILER WITHDRAWAL	
	00054920	CONNECTION TO BOILER WITHDRAWAL WITH O-RING	
14	00053785	ELECTROVALVE BREWING FULL 3/2 WAYS	
	00100147.001	OPERATOR KIT 3/2 WAY WATER T30 (ACL)	
	00100149.001	PLUNGER 3/2 WAY WATER T30 (ACL)	
15	38228072	TEFLON HOSE FOP D. 4,0 X 2,5 MM	
16	10705175	MANOMETER-BOILER COFFEE PIPE	
17	35002511	COFFEE BOILER MANOMETER D.40 0-25 BAR CL 1,6	
18	69200139	ELBOW CONNECTOR G1/8x4 PPSU	
19	00054067	CHECKVALVE D. G 1/8	
	00058031	RETROFIT KIT NON-RETURN VALVE G 1/8	
20	00057567	ADAPTER NIPPLED. G 1/4 X G 1/8	
21	00054104	HOLLOW SREW WIT O-RING (USA)	
	00054923	HOLLOW SCREW WITH O-RING	
22	00054141	RETROFIT BREWING VALVE	
	00057074	HOSE CONECTOR	
23	00004474	SILICON HOSE D. 8 X 5 MM	
24	00056479	REDUCING T CONNECTORD. 15 - 6 - 15	
25	10110729	EXTENSION WIRING COFFEE PROBE ONE-S50	
26	10700268	RETROFIT KIT TEMP. SENSOR ONE-S50	
27	00057912	THREADED ELBOW, MALED. 6 MM X G1/8	
28	00100046.002	THREADED MALE NIPPLE D. 4 X M5	
29	00018843	ADJUSTABLE ELBOWG 1/4 X D. 8MM	
30	69200142	ELBOW CONNECTOR G1/4x4 PPSU	
31	00100271.001	VALVE BLOCK BYPASS	
32	00100183.001	HOLLOW SCREW	
	00100186.013	CIRCLIP	
33	00002240	O-RING 14 X 1,78 EPDM 70SH	
	00100185.001	O-RING 10.1 X 1.78 EPDM	
34	69200134	FAST STRAIGHT CONNECTOR G1/8 X 4	
35	00059249	THREADED ELBOW, MALE D. 4 X G1/8	
36	00050095	PRESSURE VALVE BY PASS	
37	10110729	EXTENSION WIRING COFFEE PROBE ONE-S50	
38	00100282.001	RETROFIT KIT BYPASS S 50 P	
39	00002207	O-RING 8 X 1 EPDM	
	34049006	PLUNGER 2/2 WAY WATER T22 (ACL)	

K13019_01

hot Water boiler

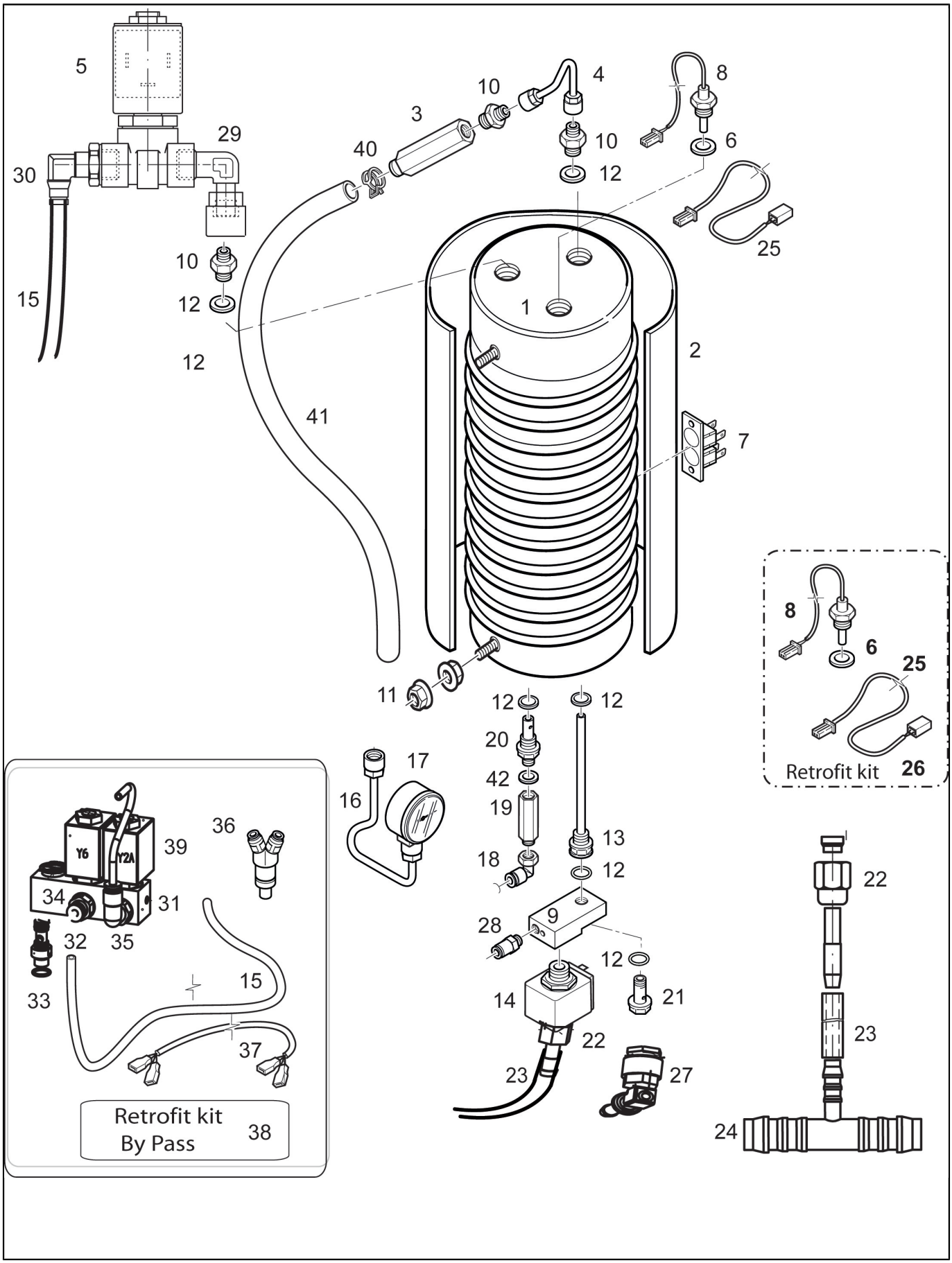

K13019_01

hot Water boiler

POS.	CODE	DESCRIPTION	NOTES
	34049007	OPERATOR KIT 2/2 WAY WATER (ACL) T22	
40	00055795	WIRE HOSE CLIP D. 17,3 MM	
41	00004473	SILICON HOSE D. 14 X 9 MM	
42	00009917	GASKET 12,5 X 9,8 X 1,2 COPPER	

K13106_01

Steam spout

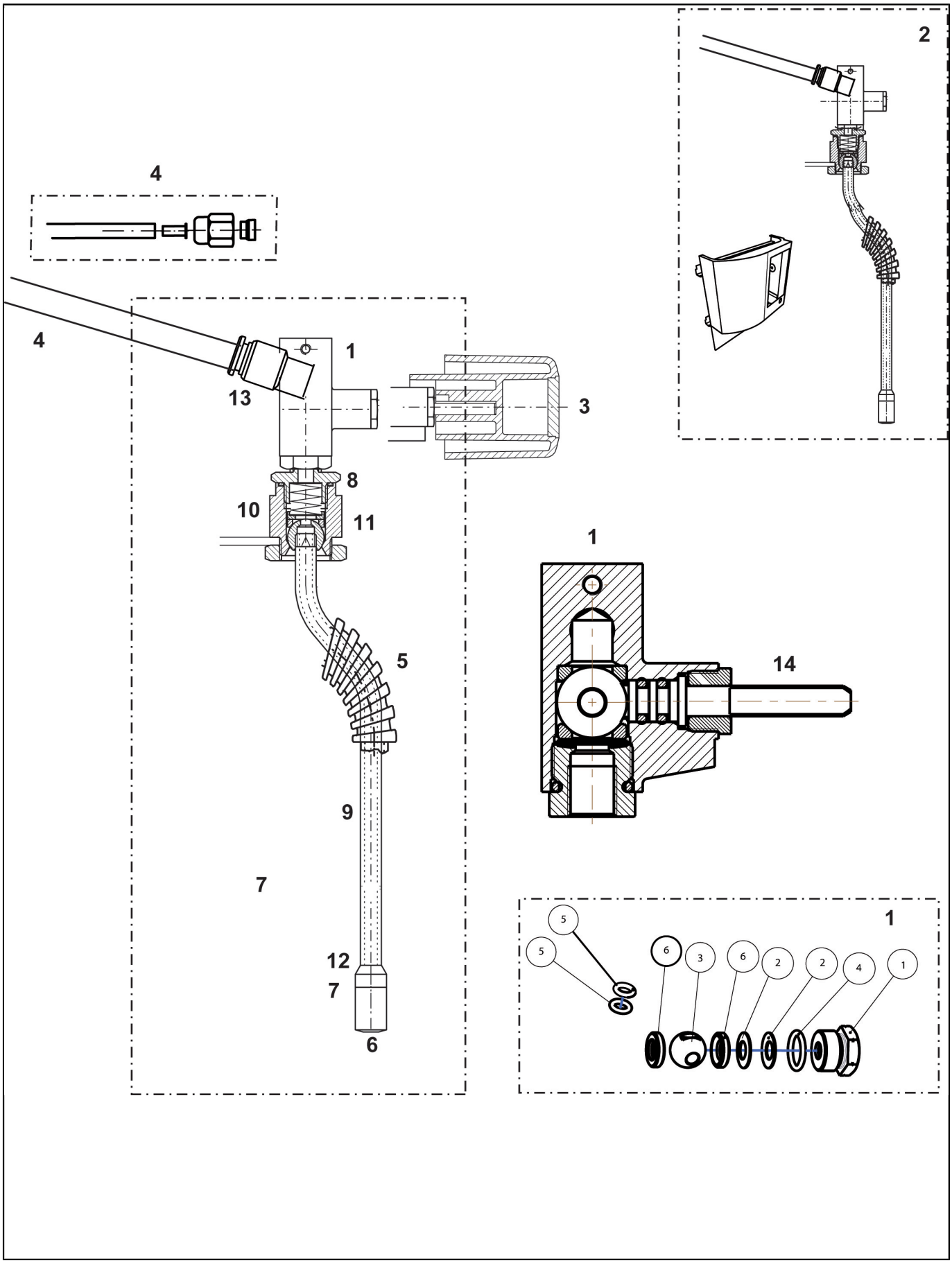

K13106_01

Steam spout

POS.	CODE	DESCRIPTION	NOTES
1	00046366	STEAM TAP	
	00046603	REPAIR KIT TO STAM TAP	
	00053968	STEAM TAP ASSAY. (INKLE. POS. 5,6,7A,7B,8,9)	
2	00061036	RETROFITKIT STEAM MANUAL	
3	00043408	PLATE SPRING (HANDLE)	
	00054306	HANDLE ASSAY.	
4	00004101	CONNECTOR NUT D. 6 MM X G 1/8	
	00004104	CLAMPING RING SO 1-8 8 MM	
	00004107	SUPPORTING SLEEVED. 4 MM	
	00054451	CONNECTION HOUSE ASSAY.	
	38228073	TEFLON HOSE FOP D. 6 X 4 MM	
5	36990028	HANDPROTECTION FOR STEAM WAND	
6	25111006	STEAM NOZZLE	
7	00002195	O-RING 5 X 1 EPDM 70SH	
	00002207	O-RING 8 X 1 EPDM	
8	00002250	O-RING 15,6 X 1,78 EPDM 70SH	
9	00044616	Pipe 160,0 Mm	
10	00002569	GASKET TEFLON PTFE	
11	00012369	O-RING SEAL D. 14 X 3MM	
12	00053967	CONNECTOR FOR STEAM NOZZLE	
13	69200140	ELBOW CONNECTOR G1/8x6 PPSU	
14	00045767N	STEAM TAP BODY S50/70 NICKEL PLATED	

K13106_03

iSteam spout

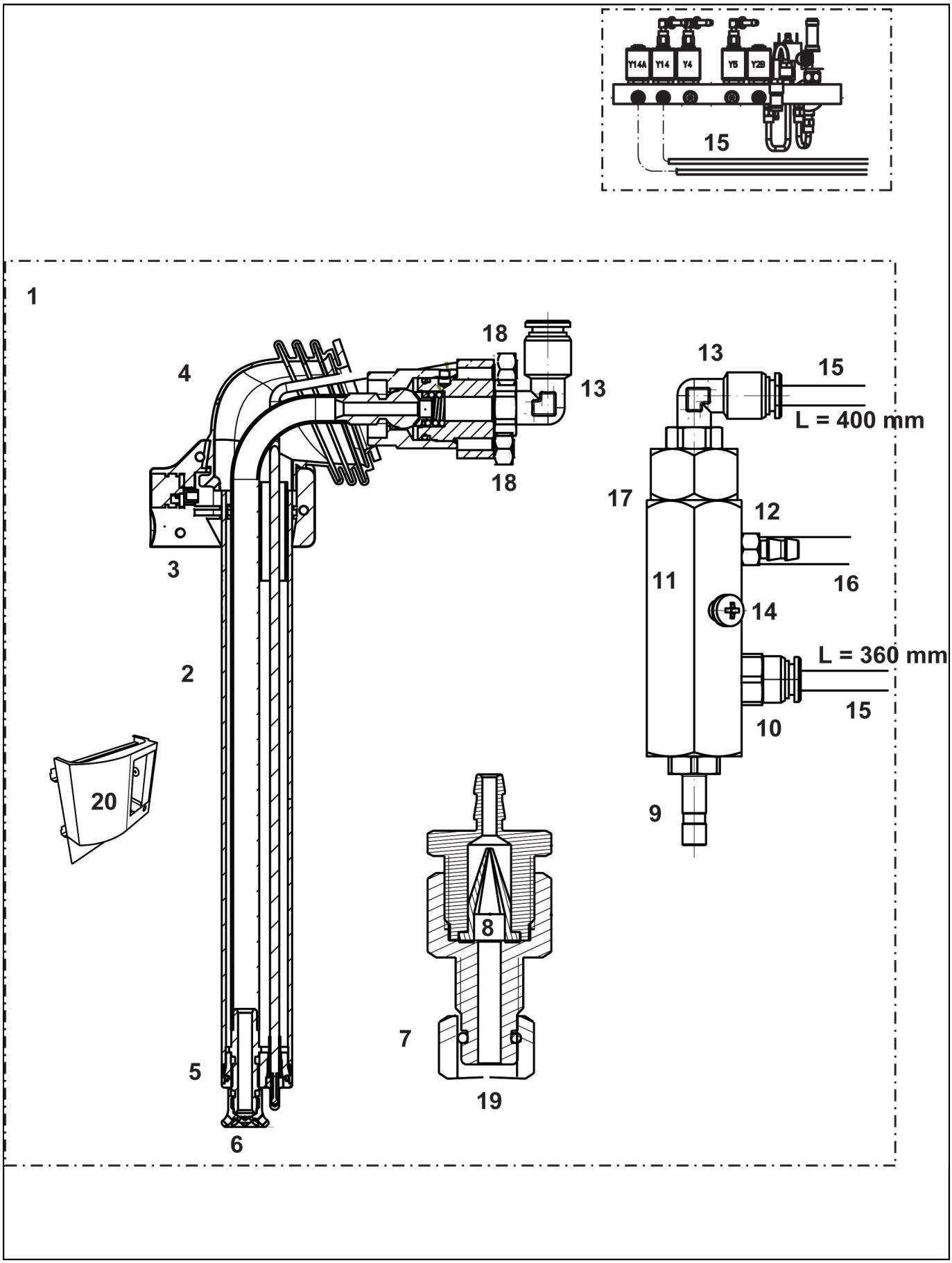

K13106_03

iSteam spout

POS.	CODE	DESCRIPTION	NOTES
1	00060999	I-STEAM RETROFIT KIT	
2	00100413.001	I-STEAM	
3	10705388	KIT ISTEAM KEYBOARD	
4	36990017	STEAM SHROUD ISTEAM	
5	00100043.001	O-RING 6,75 X 1,78 MVQ	
6	23000098T	ISTEAM SPRAYER	
7	36404007	O-RING 7,65 X 1,78 EPDM 2031	
8	36230017	DUCKBILL	
9	00100553.001	THREADED MALE NIPPLED. G1/8 X 6 MM	
10	69200135	FAST STRAIGHT CONNECTOR G1/8 X 6	
11	00100556.001	MANIFOLD	
12	23000100	GASKET-HOLDER VENTURI ISTEAM	
13	69200140	ELBOW CONNECTOR G1/8x6 PPSU	
14	00017189	HEX SOCKET HEAD SCREW M4 X 6 MM	
15	00002240	O-RING 14 X 1,78 EPDM 70SH	
	38228073	TEFLON HOSE FOP D. 6 X 4 MM	
16	00050010.001	SILICON HOSE D. 6,0 X 3,0 MM	
17	36404054	O-RING 12,42 X 1,78 V 70SH 2050	
18	00018846	HEX SOCKET HEAD SCREW M5 X 8 MM	
19	23000092	FLOW LIMITER D. 0,25 MM	
	23000093	FLOW LIMITER D. 0,35 MM	
20	00100414.001	FRONT HOUSING	

K13144_01

drain Water hose with milk

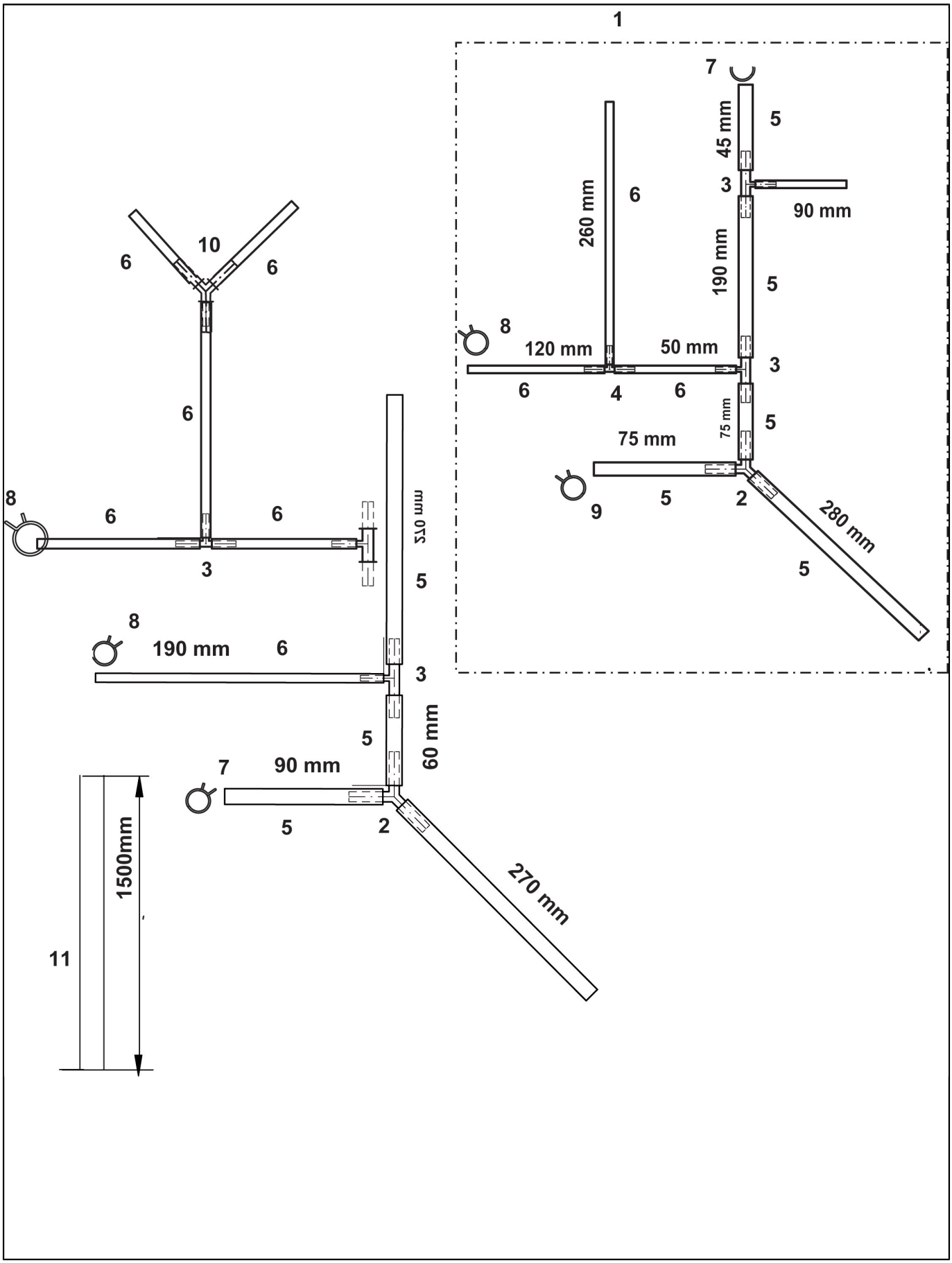

K13144_01

drain Water hose with milk

POS.	CODE	DESCRIPTION	NOTES
1	00100172.001	DRAIN WATER ASSAY.	
2	00046806	Y UNIT D. 12 MM	
3	00045714	REDUCING T CONNECTOR D. 12 - 6 - 12 MM	
4	00049643	REDUCING T CONNECTORD. 6 MM	
5	00004473	SILICON HOSE D. 14 X 9 MM	
6	00048474	SILICON HOSE D. 7 X 4 MM	
7	00055795	WIRE HOSE CLIP D. 17,3 MM	
8	39930001	WIRE HOSE CLAMP 68MM	
9	00055794	WIRE HOSE CLAMP D. 159 MM	
10	36901804	DRAIN PIPE 14 X 1500	
11	00004468	HOSE PVCD. 20,0 X 14,0 MM	

K13130_01

Cold Water valve block to 11.2007

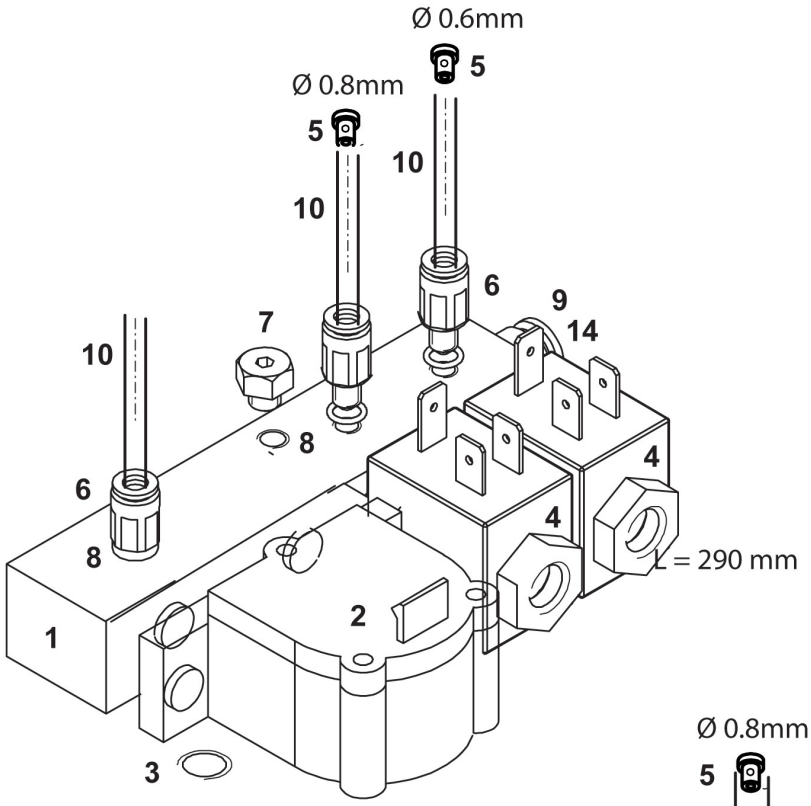

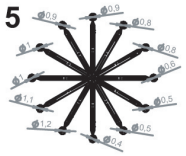

ab 11.07 from 11.07

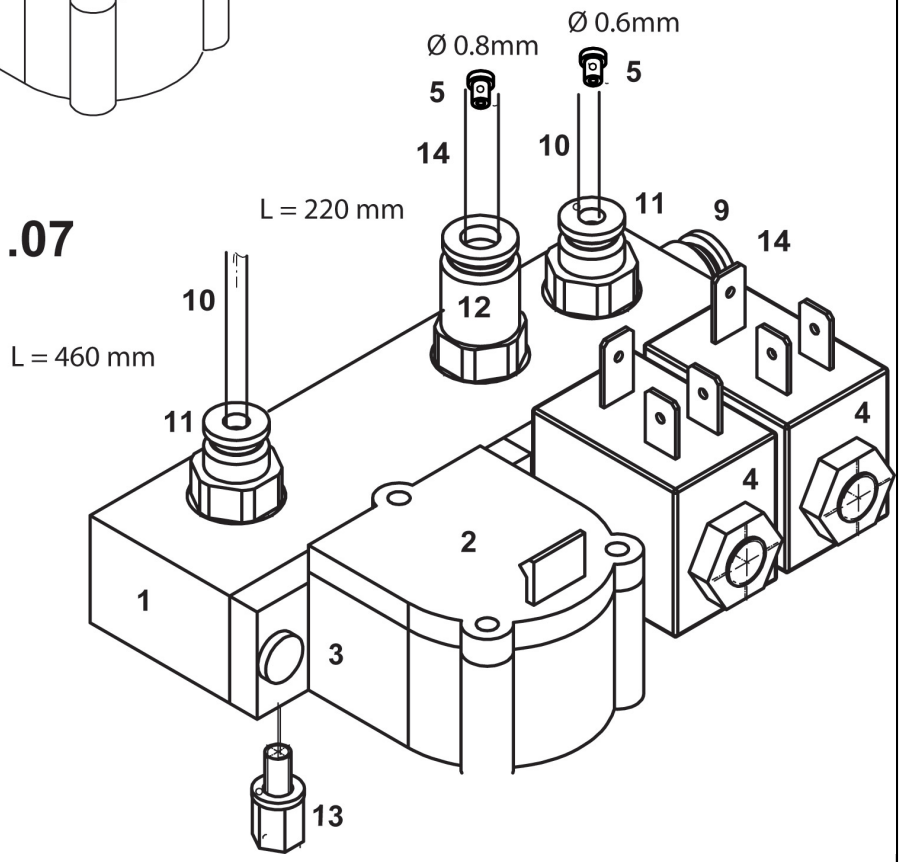

K13130_01

Cold Water valve block to 11.2007

POS.	CODE	DESCRIPTION	NOTES
1	00100313.002	COLD WATER VALVE BLOCK ASSAY.	
	34040168	BARRA ACQUA FREDDA 2ELV 24V INOX MM22	
2	00053558	FLOWMETER WITH O-RINGS	
3	00055294	O-RING KIT FOR FLOWMETER	
4	34049006	PLUNGER 2/2 WAY WATER T22 (ACL)	
	34049007	OPERATOR KIT 2/2 WAY WATER (ACL) T22	
5	38120127	RESTRICTION RING LITTLE WHITE	
6	00100046.002	THREADED MALE NIPPLE D. 4 X M5	
7	00054559	THREADED STOPPER M5 WITH O-RING	
8	00002195	O-RING 5 X 1 EPDM 70SH	
9	69200135	FAST STRAIGHT CONNECTOR G1/8 X 6	
10	38228072	TEFLON HOSE FOP D. 4,0 X 2,5 MM	
11	69200134	FAST STRAIGHT CONNECTOR G1/8 X 4	
12	69200149	CHECK VALVE 6 X 1/8G PPSU	
13	00053558	FLOWMETER WITH O-RINGS	
14	38228073	TEFLON HOSE FOP D. 6 X 4 MM	

K02400_05

Valves

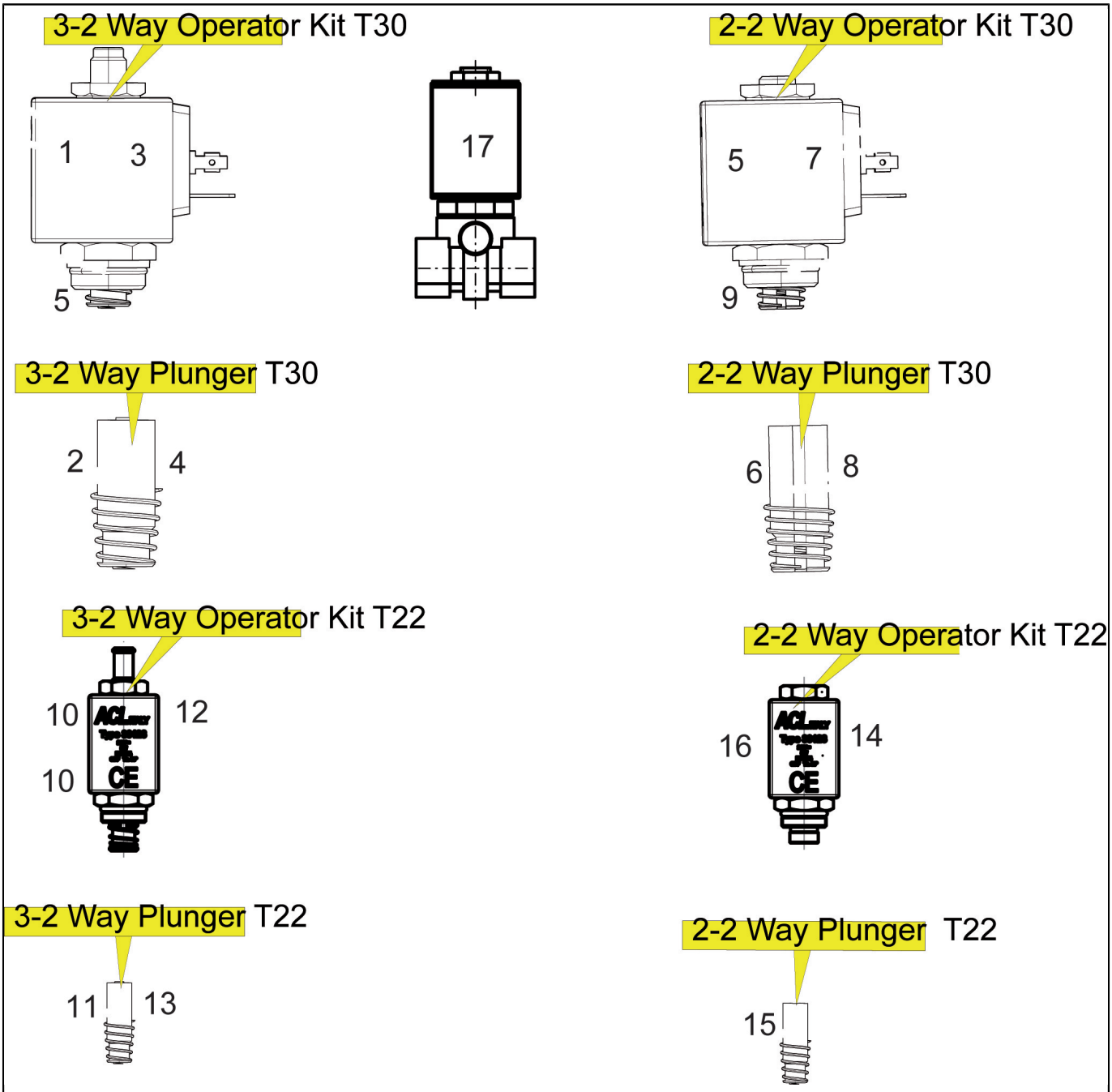

K02400_05

Valves

POS.	CODE	DESCRIPTION	NOTES
1	00100116.005	OPERATOR KIT 3/2 WAYS STEAM (ACL) T30	
2	00100147.001	OPERATOR KIT 3/2 WAY WATER T30 (ACL)	
3	00100016.005	PLUNGER 3/2 WAY STEAM T30 (ACL)	
4	00100149.001	PLUNGER 3/2 WAY WATER T30 (ACL)	
5	00100559.001	OPERATOR KIT 2/2 WAY WATER T30 (ACL)	
6	00100560.001	PLUNGER 2/2 WAY WATER T30 (ACL)	
7	00100559.001	OPERATOR KIT 2/2 WAY WATER T30 (ACL)	
8	00100560.001	PLUNGER 2/2 WAY WATER T30 (ACL)	
9	00100013.001	O-RING 17,17 X 1,78 F	
10	00100830.005	OPERATOR KIT 3/2 WAYS STEAM (ACL) T22	
11	00100832.005	PLUNGER 3/2 WAY STEAM T22 (ACL)	
12	00100851.005	OPERATOR KIT 3/2 WAYS WATER (ACL) T22	
13	00100853.005	PLUNGER 3/2 WAY WATER (ACL) T22	
14	34049007	OPERATOR KIT 2/2 WAY WATER (ACL) T22	
15	34049006	PLUNGER 2/2 WAY WATER T22 (ACL)	
16	00059133	O-RING 11,11 X 1.78 FKM 70SH	
17	00100558.001	ELECTROVALVE 2/2 WAY WATER T30 (ACL)	

K11000_01

connecteur

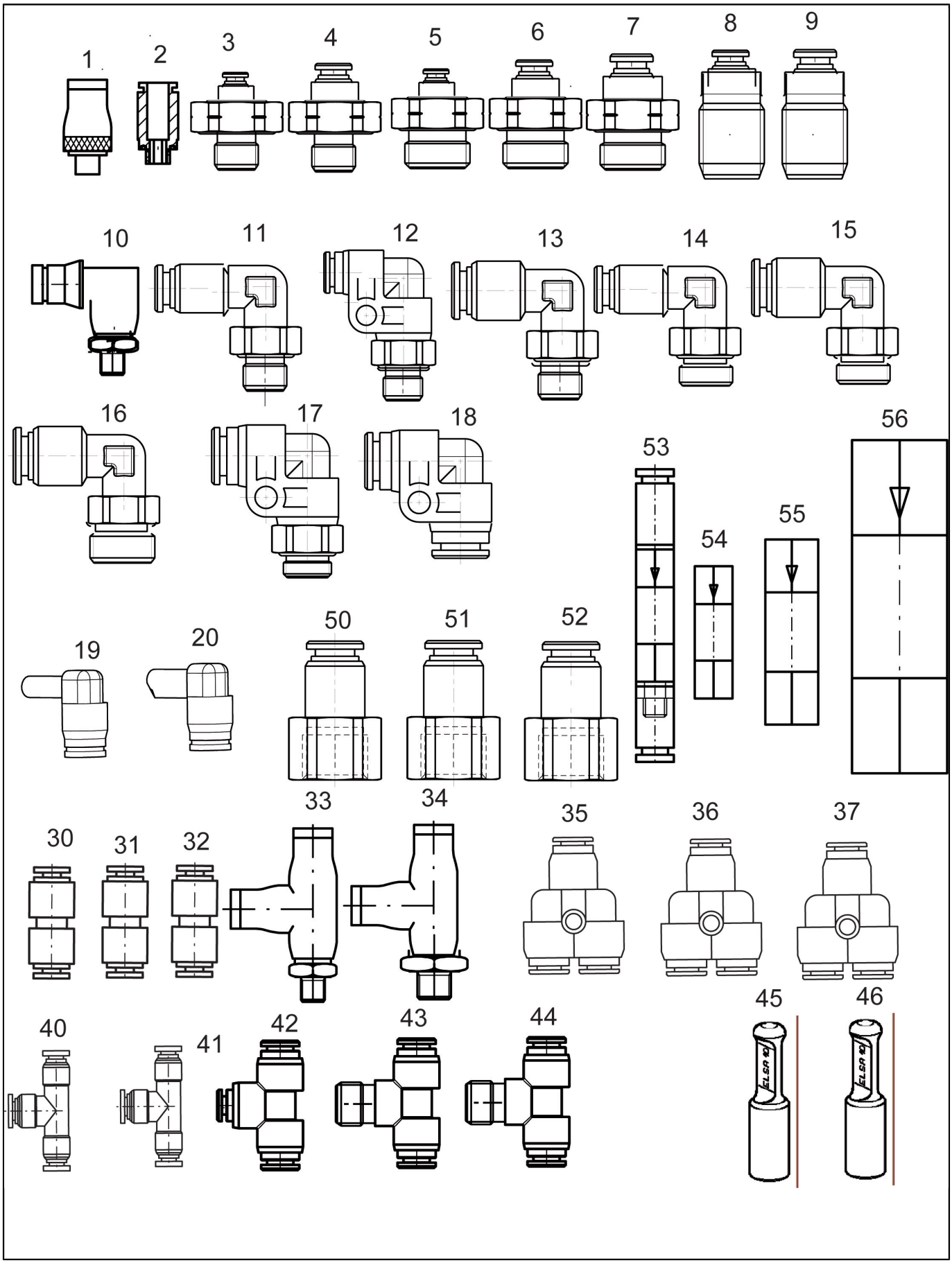

K11000_01

connecteur

POS.	CODE	DESCRIPTION	NOTES
1	00028837	THREADED MALE CONNECTION STRAIGHT ÷ 4 X M5	
2	00100046.002	THREADED MALE NIPPLE D. 4 X M5	
	69200133	FAST STRAIGHT CONNECTOR M5	
3	69200134	FAST STRAIGHT CONNECTOR G1/8 X 4	
4	69200135	FAST STRAIGHT CONNECTOR G1/8 X 6	
6	00100168.001	THREADED MALE NIPPLED. 6 MM X G 1/4	
7	69200137	STRAIGHT NIPPLE M8 X G1/4	
8	69200136	STRAIGHT NIPPLE M6 X G3/8	
9	69200137	STRAIGHT NIPPLE M8 X G1/4	
10	00041633	THREADET ELBOW D. 4 MM X M5	
11	69200139	ELBOW CONNECTOR G1/8x4 PPSU	
12	00059249	THREADED ELBOW, MALE D. 4 X G1/8	
13	00053754	THREADED ELBOW, MALE D. 6 MM X G1/8	
14	69200142	ELBOW CONNECTOR G1/4x4 PPSU	
15	69200141	ELBOW CONNECTOR G1/4X6 PPSU	
16	00100649.001		
18	00100793.001	ANGEL PLUG-IN CONNECTORD. 6 X 6 MM	
19	00060076	PLUG IN ELBOW CONNECTOR 6X4	
20	69200089	FAST CONNECTION HOSE D.4	
30	69200148	STRAIGHT CONNECTOR 4 X 4 PPSU	
31	69200094	WATER ENTRY CONNECTOR D.6/4	
33	00029568	MALE ELBOW CONNECTOR D. 4 MM X M5	
34	00055975	L-CONNECTION D. 4 MM X G 1/8	
35	00054344	Y-CONNECTION D. 4 MM	
36	00100286.001	Y-CONNECTION D. 6 MM	
40	00054346	T - CONNECTOR D. 4 MM	
41	00060077	T - CONNECTOR D. 6 MM	
42	00100897.001	T - CONNECTORD. 6 X 4 X 6 MM	
43	00100959.001	T - CONNECTORD. 6 X 6 X G1/4	
44	00100793.001	ANGEL PLUG-IN CONNECTORD. 6 X 6 MM	
45	00100618.004	PLUGD. 4 MM	
46	00100618.006	PLUGD. 6 MM	
50	00100646.001	SCREWS ON CLOWN D. 4 X G 1/4	
51	00100647.001	SCREWS ON CLOWN D. 6 X G 1/4	
52	00100648.001	SCREWS ON CLOWN D. 8 X G 1/4"	
53	00053943	COUPLING UNIT (CHECK VALVE)	
54	00048820	NON-RETURN VALVE M5	
55	00054067	CHECKVALVE D. G 1/8	
56	00057681	CHECKVALVE	

K11000_02

connecteur

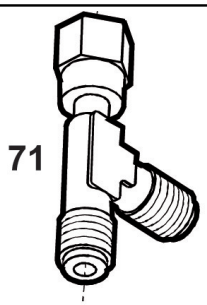

G 1/4 Ø 8 mm
Einstell L

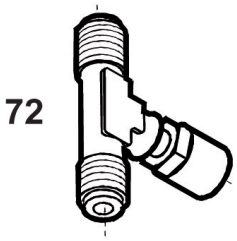

G 1/4 Ø 8 mm
Einstell T

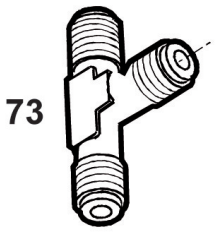

G 1/4
Einschraub T

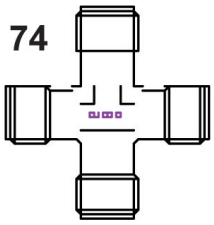

G 1/4
Kreuzstück

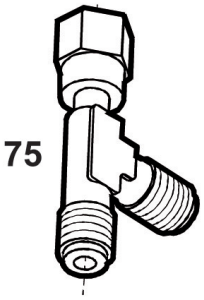

G 1/8 Ø 6 mm
Einstell L

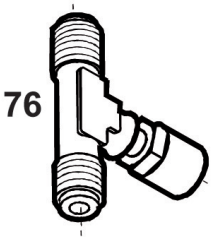

G 1/8 Ø 6mm
Einstell T

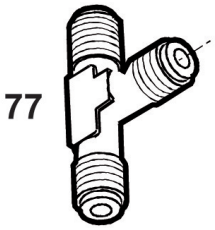

G 1/8
Einschraub T

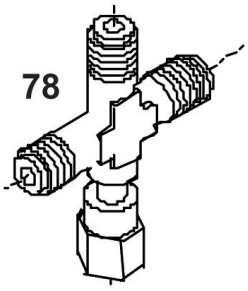

G 1/8 Ø 6mm
Einstell Kreuz

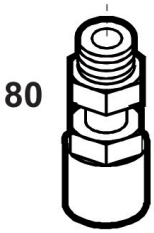

G 1/4 Ø 8 mm
Verschraubung

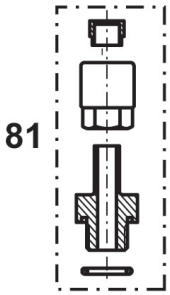

G 1/4 Ø 8 mm
Verschraubung

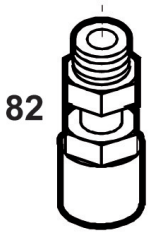

G 1/8 Ø 6 mm
Verschraubung konisch

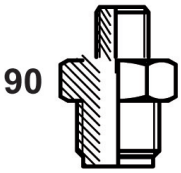

G 3/8" x G 1/4"
Doppelnippell

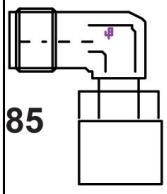

G 1/4 Ø 8 mm
Einstell Winkel

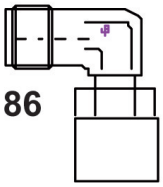

G 1/8 Ø 6 mm
Einstell Winkel

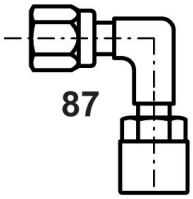

G 1/8 Ø 6 mm
Winkel

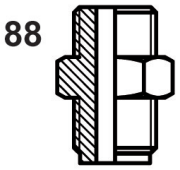

G 1/4" x G 1/4"
Doppelnippell

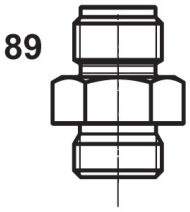

G 1/4" x G 1/4"
Doppelnippell

K11000_02

connecteur

POS.	CODE	DESCRIPTION	NOTES
71	00060490	ADJUSTABLE T WITH COMPRESSION CONNECTORG 1/4 X D	
72	00055924	ADJUSTABLE L WITH COMPRESSION CONNECTORG 1/4 X D	
73	00004118	THREADED INSERT MALE T 3 X G 1/4	
74	00028822	SPIDER BODY 4 X G 1/4	
75	00031136	ADJUSTABLE L WITH COMPRESSION CONNECTORG 1/8 X D	
76	00031134	ADJUSTABLE L WITH COMPRESSION CONNECTORG 1/8 X D	
78	00047972	G 1/8 X D. 6MM	
80	00046842	THREADED FITTING G 1/4 X D. 8MM	
81	00060866	THREADED FITTING ASSAY. D. G 1/4 X 8 MM	
82	00004124	CONNECTION CONICG 1/8 X D. 6MM	
85	00018843	ADJUSTABLE ELBOWG 1/4 X D. 8MM	
86	00046567	G 1/8 X D. 6MM	
87	00055803	ANGEL WITH COMPRESSION CONNECTOR + NUTG 1/8 X D.	
88	00011313	DOUBLE NIPPLE D. G 1/4 X G1/4	
89	00054919	DOUBLE NIPPLEG 1/4	
90	00012200	DOUBLE NIPPLE D. G 1/4X G 3/8	

K11106_01

Electrical circuits set

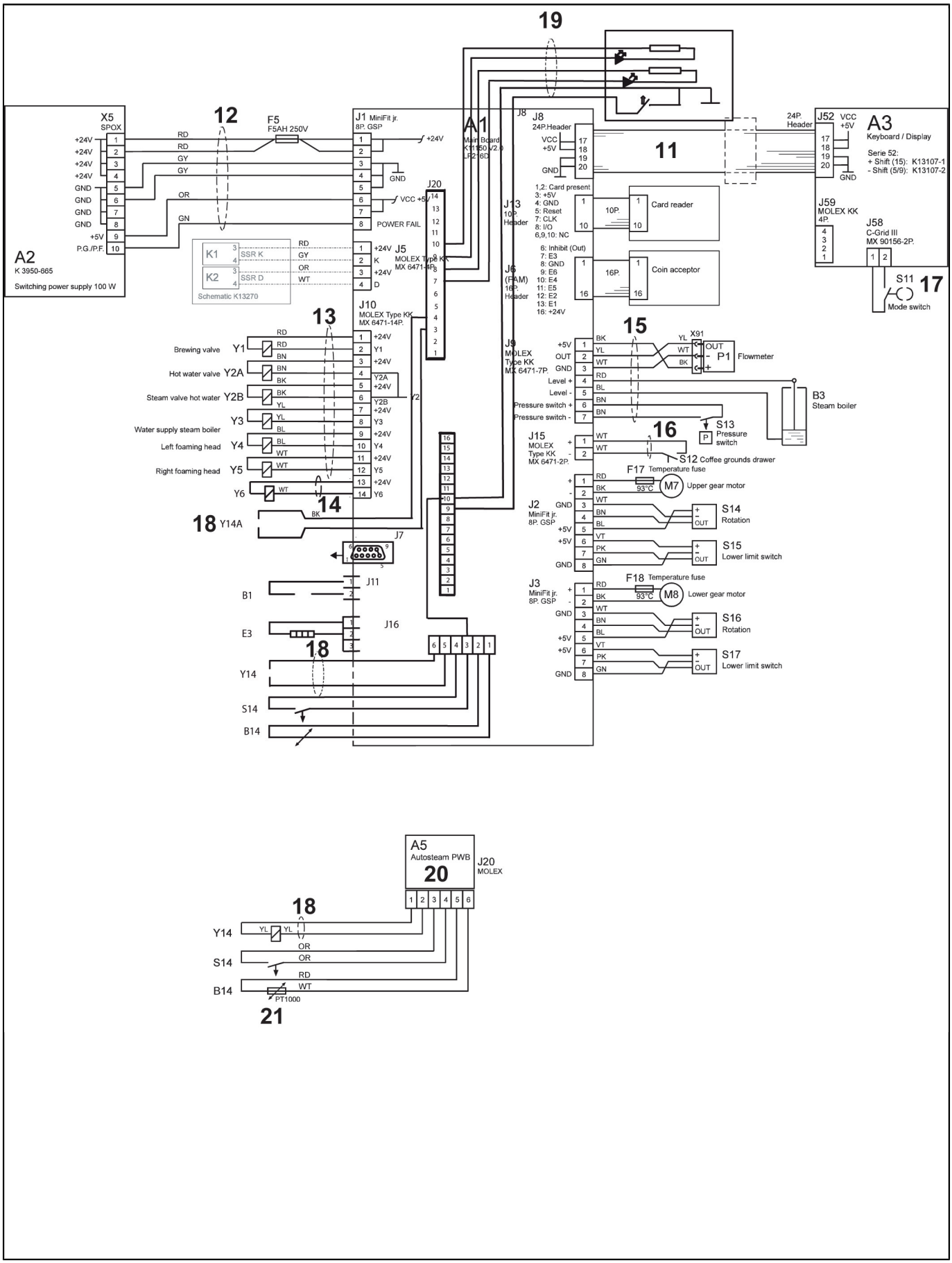

K11106_01

Electrical circuits set

POS.	CODE	DESCRIPTION	NOTES
11	00040891	FLAT CABLE 24 POL.L = 230MM	
	00044846	FLAT CABLE 600MM	
12	00100020.050	WIRING SET X5 - J45	
13	00053809	WIRING SET J10	
14	00100274.001	SET CIRCUIT TO BYPASS	
15	00053808	WIRING SET J9	
16	00045408	WIRING SET	
17	00040613	KEY LOCK SWITCH ASSAY.	
18	00100296.001	CABLE HARNESS AUTO. STEAM	
19	00100441.001	SET CIRCUIT TO ISTEAM	
20	00060083	PRINT AUTO STEAM SHUT OF	
21	00060120	STEAM SENSOR ASSAY.	

K11105_01

Electrical circuits power supplay

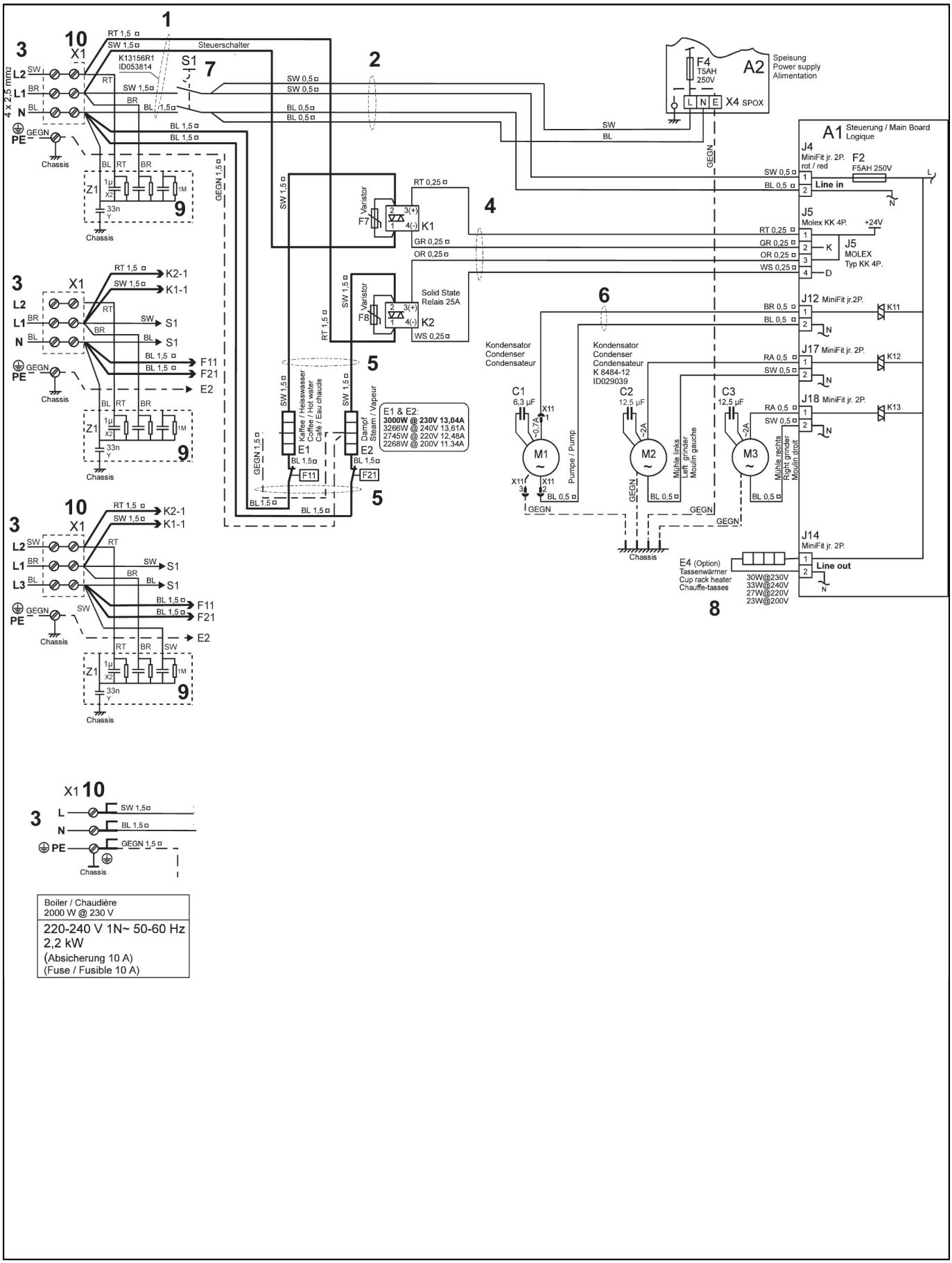

K11105_01

Electrical circuits power supplay

POS.	CODE	DESCRIPTION	NOTES
1	00044850	CABLE HARNESS TO BOILER HEATER	
	00053814	WIRING SET, BOILER HEATING	
2	10110719	WIRING S50	
3	00046300	MAIN ELECTRIC CCABLE 13 A	
	00053952	CONNECTING TERMINAL 3 P	
	00059269	SUPPLY CORD 3 X AWG 10 (USA)	
4	00048026	WIRING SET J5 - K1 - K2 WITH SSR RELAIS	
5	00048057	WIRE BL 140	
	00058794	WIRE BL 140	
	00058797	WIRING SET, BOILER	
	00100580.001	WIRING SET, BOILER (USA)	
6	00044848	CABLE HARNESS J 12 - M1	
7	00030715	ROCKER SWITCH	
8	00046629	HEATING FILM	
9	00055132	NOISE FILTER FN	
	00055133	NOISE FILTER FN	
10	00045531	CONNECTING TERMINAL	
	00053952	CONNECTING TERMINAL 3 P	
	00055239	CONNECTING TERMINAL 3 P	

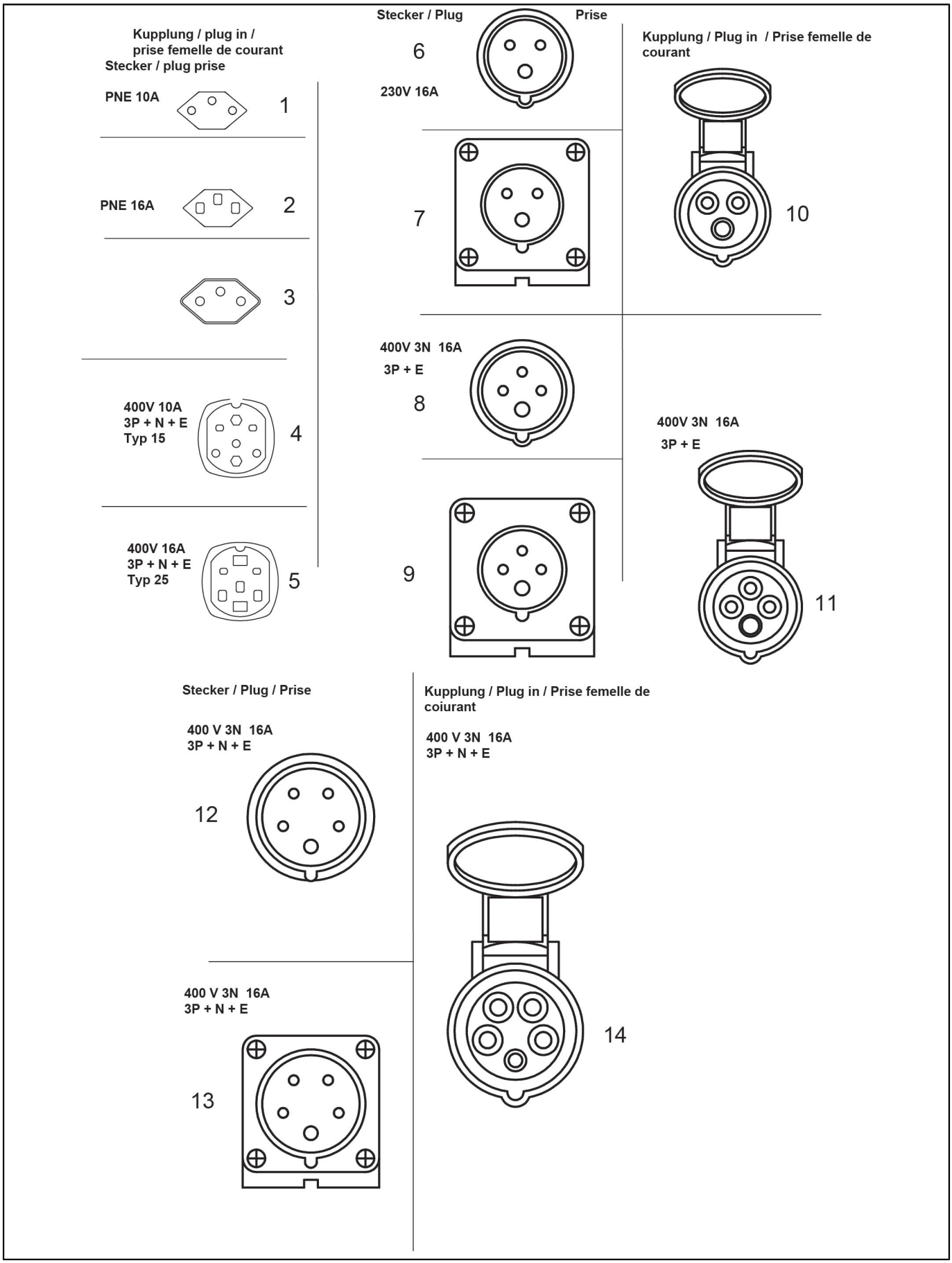
Kupplung / plug in /
prise femelle de courant
Stecker / plug prise
PNE 10A
1
PNE 16A
2
3
400V 10A
3P + N + E
Typ 15
4
400V 16A
3P + N + E
Typ 25
5
Stecker / Plug
Prise
6
230V 16A
7
400V 3N 16A
3P + E
8
9
Kupplung / Plug in / Prise femelle de courant
10
400V 3N 16A
3P + E
11
Stecker / Plug / Prise
400 V 3N 16A
3P + N + E
12
400 V 3N 16A
3P + N + E
13
Kupplung / Plug in / Prise femelle de coiurant
400 V 3N 16A
3P + N + E
14

K03950_01

Electrical accessories

POS.	CODE	DESCRIPTION	NOTES
1	00003138	PLUG 230V CH	
2	00003139	PLUG-IN 230V CH	
3	00048290	MACHINE PLUG (CONNECTOR) 220V FELLER T 23 WHITE 3-	
4	00032302	PLUG 400V 10A	
5	00048427	MACHINE PLUG (CONNECTOR) FELLER T 25 WHITE 5-POL.	
6	00048029	PLUG 230V 16A	
7	00048021	SOCKET 230V 16A	
8	00048279	SOCKET 400V 16A	
9	00048241	SOCKET 400V 16A	
10	00048028	PLUG-IN 230V 16A	
11	00048280	PLUG-IN 400V 16A	
12	00043233	PLUG 400V 16A	
13	00048022	SOCKET 400V 16A	
14	00048023	PLUG-IN 400V 16A	

K13305_02

Electrical circuits set KS 6 + 7

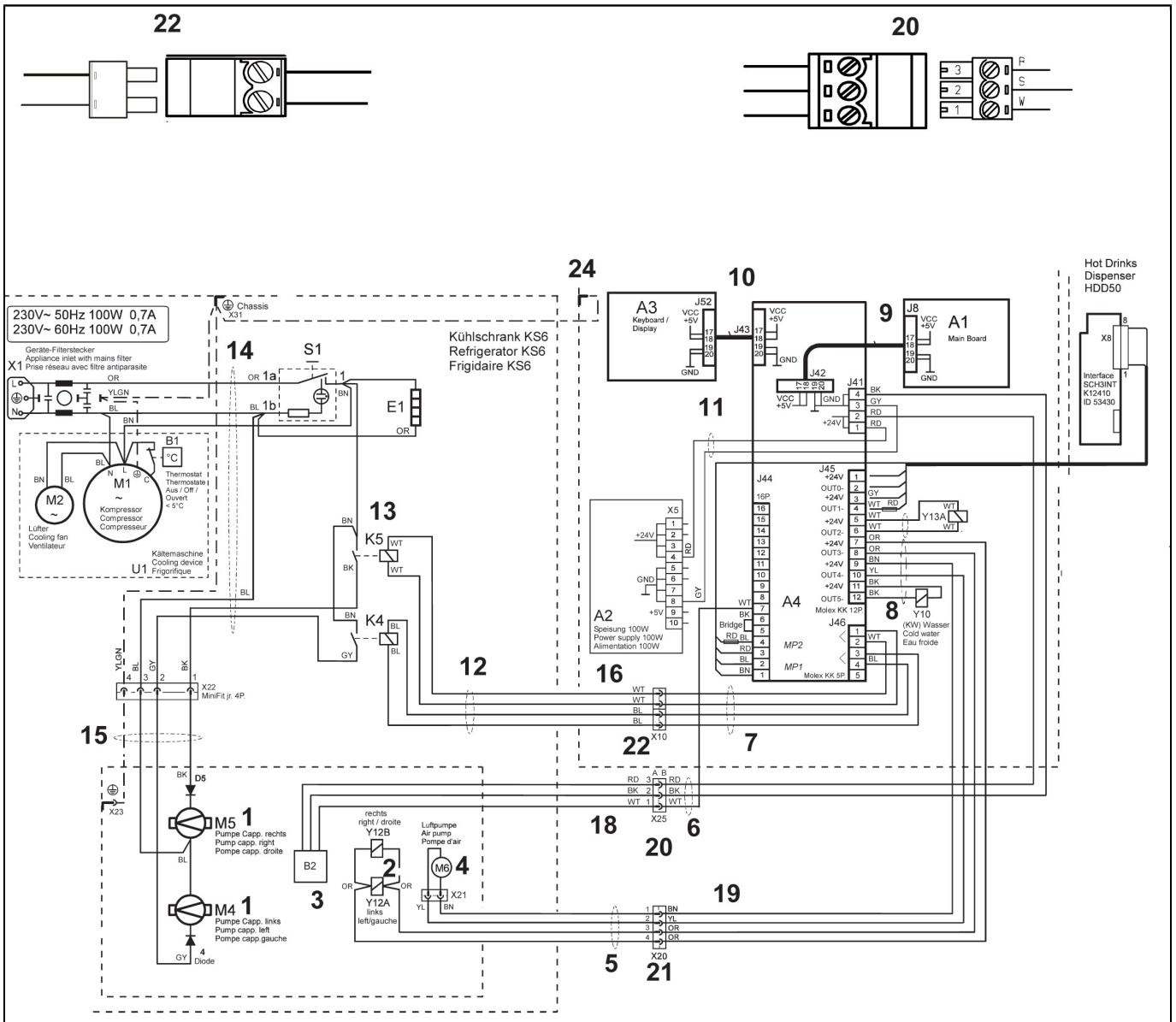

K13305_02

Electrical circuits set KS 6 + 7

POS.	CODE	DESCRIPTION	NOTES
1	00054678	DIODE KOMPL. TO GOTEC MILK PUMP	
	34011031	MILK PUMP (GOTEC ETSG 21) 110 V/50-60 HZ USA	
	34011032	MILK PUMP (GOTEC ETSG 21) 230 V/50-60 HZ STANDARD	
	34011033	MILK PUMP 230 V/50-60 HZ HIGH FLOW	
2	00059209	ELECTROVALVE 3 WAY 8W 24V KS7	
3	34070167	ULTRASONIC DETECTOR FRIDGE SENSOR	
4	00100743.001	AIR PUMP	
5	00059277	CABLE HARNESS X20	
6	00060127	CABLE FOR MILK SENSOR 50 SERIES	
	00060128	CABLE FOR MILK SENSOR 70 SERIES	
7	00048714	CABLE HARNESS J46 - X 10A	
8	00060129	WIRING SET J45	
	00060130	WIRING SET J45 50 SERIES	
9	10110723	Flat cable 24 pol.L = 230mm	
10	00044846	FLAT CABLE 600MM	
11	00100020.070	WIRING SET X5 - J45	
12	00048853	CABLE HARNESS X10B - K4 - K5	
13	00047916	RELAY 24V DC	
14	00100251.001		
15	00100250.001	CABLE HARNESS X22 TO MILK PUMP	
16	00100092.001	ADAPTER CABLE RELAYS	
17	00100078.001	CABLE HARNESS KS CABINET	
18	00100090.001	ADAPTER CABLE SENSOR	
19	00100091.001	ADAPTER CABLE L AIR PUMP	
20	00019388	PLUG 3 PLOE F	
	00057047	PLUG 3 PLOE M	
21	00019389	PLUG 4 PLOE M	
	00033154	PLUG 4 PLOE F	
22	00019036	PLUG 2 POLE M	
	00048774	PLUG 2 PLOE F	

K13000_01

Electrical components

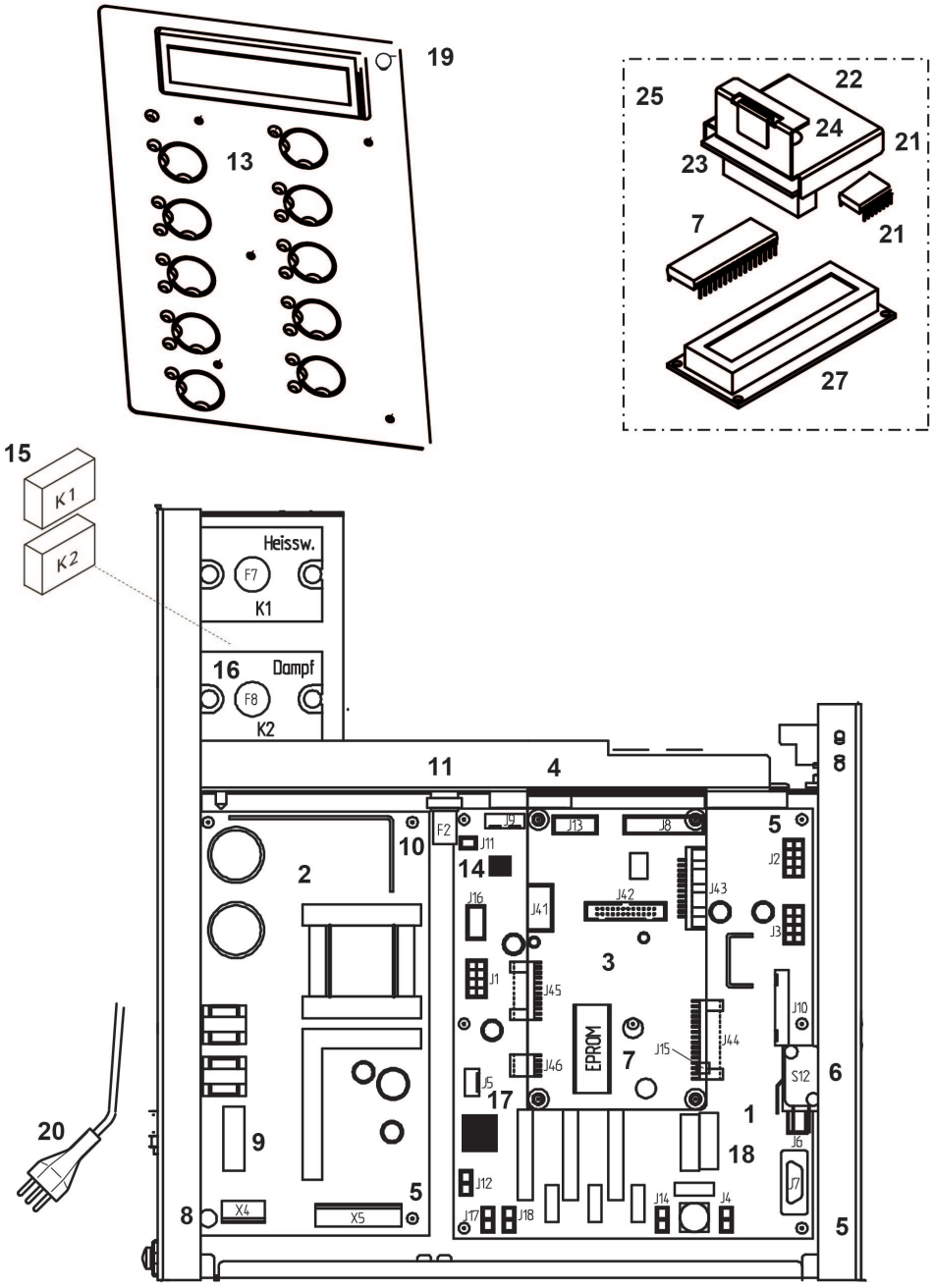

K13000_01

Electrical components

POS.	CODE	DESCRIPTION	NOTES
1	00100115.006	MAIN BOARD (ROHS) S50 R2	
2	10110382	Power supply 24V 4,5A 100W	
	10700258	RETROFIT KIT POWER SUPPLY S50-70	
3	00049058	I / O PRINT R1	
4	00054508	SUPPORTING FOR I/O PRINT	
5	00045484	DISTANCE SLEEVE	
6	34100021	MICRO ON-OFF ZERO	
7	00054001	EPROM R1	
	00100115.100	EPROM R2	
8	00054945	SPACERS ASSAY. WITH SCREW	
9	00040782	MINIATURE FUSE T5AH / 5 X 20MM 250V	
10	00046441	MINIATURE FUSE HOLDER F5	
11	00040783	MINIATURE FUSE F5AH / 5 X 20MM 250V	
13	00060254	KEYBOARD PRINT FROM 12.05 S50/S70	
14	00055515	EEPROM	
15	00100545.001	THERMAL PAD36,8X36,8 MM	
	34200353	RELE SSR 24-600VAC/35A	
16	00040598	RESISTANCEOR COMPL.	
17	00060083	PRINT AUTO STEAM SHUT OF	
18	00058776	QICK -ACTING FUSE 5A / 250V	
	00100144.001	QICK -ACTING FUSE 6.3A / 250V	
19	00019535	SPACERS M3 X 14,0 MM	
	00033896	NUT M3 X 8 MM	
20	00100220.001	MAIN ELECTRIC SUPPLY	
21	00055517	EEPROM FOR CHINA TRANSLATOR	
	00100717.001	CHINA TRANSLATOR	
22	00100759.001	COVER	
23	00100766.001	CLAMP	
24	00100749.006	SPACER	
25	00100767.001	RETROFIT KIT CHINA DISPLAY	
27	00100763.001	CHINESE DIPLAY	

5012P / 5031P Series

Service kit 1 Jahr / Year 15'000 Cycles	1
Erweiterungssatz Extension kit 3 Jahr / Year	2

5021P / 5023P / 5033PSeries

Service kit 1 Jahr / Year 15'000 Cycles	3
Erweiterungssatz Extension kit 3 Jahr / Year	4

5025P / 5035P Series

Service kit 1 Jahr / Year 15'000 Cycles	5
Erweiterungssatz Extension kit 3 Jahr / Year	6

5511P Series

Service kit 1 Jahr / Year 15'000 Cycles	7
Service kit 2 Jahr / Year 30'000 Cycles	8
Service kit 3 Jahr / Year 90'000 Cycles	9

5513P Series

Service kit 1 Jahr / Year 15'000 Cycles	10
Service kit 2 Jahr / Year 30'000 Cycles	11
Service kit 3 Jahr / Year 90'000 Cycles	12

Service kit

Erstausstattung Satz First aid kit Serie 50XXP	13
Reparatursatz Brühgruppe Repair kit brewing group	14
Umbausatz MLR 2 - MLR 4 Upgrad kit MLR 2 - MLR 4	15

K10000_02

Service + Repair kits

POS.	CODE	DESCRIPTION	NOTES
1	00060947	SERVICE KIT 5012P	
2	00060948	EXTENSION KIT 5012P	
3	00060949	SERVICE KIT 5023P	
4	00060950	EXTENSION KIT 5023P	
5	00060951	SERVICE KIT 5025P	
6	00060952	EXTENSION KIT 5025P	
7	00060585	SERVICE KIT 1 5511P	
8	00060586	SERVICE KIT 2 5511P	
9	00060587	SERVICE KIT 3 5511P	
10	00060588	SERVICE KIT 1 5513P	
11	00060589	SERVICE KIT 2 5513P	
12	00060590	SERVICE KIT 3 5513P	
13	00055302	FIRST AID KIT SERIE 50	
	00055303	FIRST AID KIT SERIE 50 / SPIRIT	
	00055304	FIRST AID KIT SERIE 50 STANDARD + P	
	00060591	FIRST AID KIT SERIE 55 (USA)	
14	00057446	GASKET KIT BREWING GROUP	
15	00058793	UPGRADE KIT FROM MLR 2 TO MLR 4 50 SERIES WITH KS	

A10001_02

Detergent + lubricant

POS.	CODE	DESCRIPTION	NOTES
1	69000400	CLEANER ACID FORMULA SYSTEM MILK 1 LT	
2	69000408	COFFEE CLEANING TABLETS JAR 100TAB	
3	00046848	PASTE FOR CONDUCTION OF HEAT	
4	00054567	LUBRICANT SYNTHETIC KLUBER UH1 64-240 45 GR.	
7	00059246	LUBRICANT BERULUB TYP FG-H-2SL	
8	00059247	LUBRICANT BERLULUB SHIAFT 2 TYP 2	
9	38120070	CLEANING BRUSH 10 X 60 X 200 POWDER MODULE	
10	00058512	CLEANING MEDIUM BRUSH 50 X 120 X 400	
11	00049876	CLEANING BIG BRUSH 18 X 80 X 300 MM	

A10001_04

Special tools

POS.	CODE	DESCRIPTION	NOTES
1	69000982	SCALE	
2	69000983	DIGITAL THERMOMETER	
3	00048105	TUBE CUTTER	
5	00054537	SPECIAL PINCERS TO IN-OUT ASSEMBLY OF TEFLON HOSES	
6	00043387	TESTER FOR DEGREE OF HARDNESS	
7	00044637	EXTRACTOR TOOL FOR WIRE CONNECTOR	
8	38120004	COFFEE-MEASURE SPOON	

K10001_05

Special tools

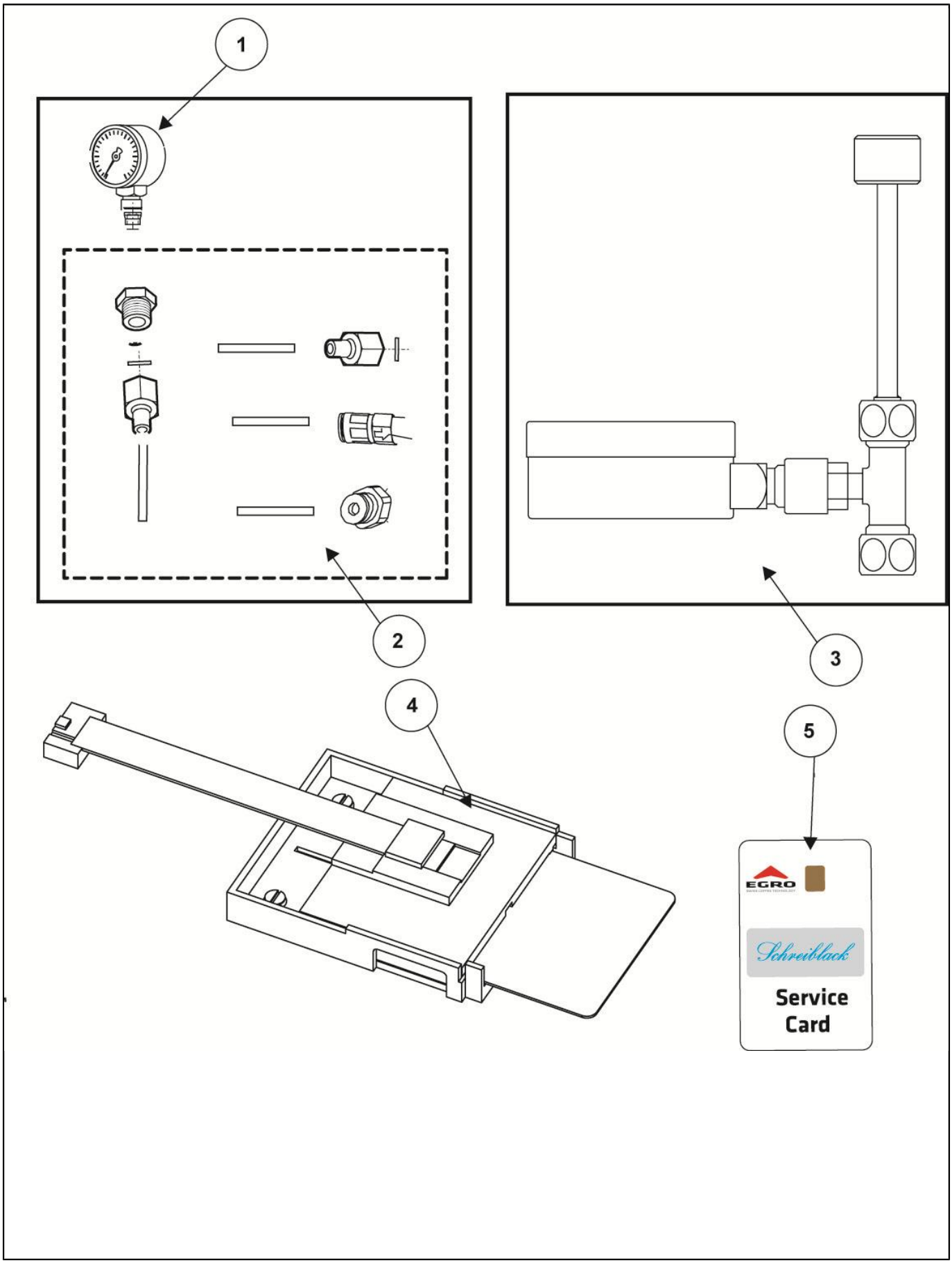

K10001_05

Special tools

POS.	CODE	DESCRIPTION	NOTES
1	00100236.001	PRESSURE GAUGE 4 BAR	
2	00054955	METERING DEVICE FOR STEAM PRESSURE	
3	00043176	PRESSURE GAUGE DEVICE ASSAY. FOR SERIE 50 & ARCO	
4	00045550	CARDS READER	
5	00048359	SERVICE CARD	

Alphanumeric index

Code	No. table	Pos.
00000928	K11800_01	21
00000930	K11800_01	12
00000935	K11800_01	13
00001176	K11800_01	4
00001185	K13120_02	27
00001484	K13030_01	7
00001518	K11800_01	26
00001521	K11800_01	24
00001521	K13019_01	11
00001728	K13105_01	4
00001894	K13030_01	7
00002195	K13106_01	7
00002195	K13106_02	9
00002195	K13130_01	8
00002205	K13105_01	11
00002207	K13019_01	39
00002207	K13100_04	8
00002207	K13106_01	7
00002207	K13106_02	10
00002240	K13019_01	12
00002240	K13019_01	33
00002240	K13030_01	6
00002240	K13105_01	9
00002240	K13106_03	15
00002250	K13105_01	5
00002250	K13106_01	8
00002250	K13106_02	8
00002569	K13106_01	10
00002569	K13106_02	3
00002752	K13055_01	15
00003138	K03950_01	1
00003139	K03950_01	2
00003744	K13106_02	5
00003747	K13119_01	5
00004014	K13120_02	11
00004015	K13120_02	12
00004101	K13106_01	4
00004104	K13106_01	4
00004107	K13106_01	4
00004118	K11000_02	73
00004124	K11000_02	82
00004415	K13055_01	16
00004468	K13144_01	11
00004473	K13019_01	41
00004473	K13144_01	5
00004474	K13019_01	23
00005295	K13105_01	2
00009917	K13019_01	42
00011313	K11000_02	88
00012077	K13030_01	3
00012200	K11000_02	90
00012369	K13106_01	11
00012822	K13105_01	10
00017151	K13030_01	10
00017189	K13106_03	14
00017713	K13105_01	7
00018843	K11000_02	85
00018843	K13019_01	29
00018846	K13106_03	18
00019036	K13305_02	22
00019388	K13305_02	20
00019389	K13305_02	21
00019535	K13000_01	19
00019974	K13055_01	14
00028822	K11000_02	74
00028837	K11000_01	1
00029039	K11120_01	2

Code	No. table	Pos.
00029568	K11000_01	33
00030715	K11105_01	7
00031134	K11000_02	76
00031136	K11000_02	75
00032302	K03950_01	4
00033154	K13305_02	21
00033896	K13000_01	19
00039064	K11800_01	8
00039067	K13125_02	4
00039817	K13120_02	26
00040404	K13120_02	24
00040598	K13000_01	16
00040613	K11106_01	17
00040613	K13120_02	26
00040730	K11211_02	11
00040782	K13000_01	9
00040783	K13000_01	11
00040891	K11106_01	11
00041493	K13055_01	17
00041633	K11000_01	10
00042324	K13055_01	2
00043176	K10001_05	3
00043233	K03950_01	12
00043387	A10001_04	6
00043408	K13106_01	3
00043884	K13119_01	9
00044464	K13019_01	6
00044464	K13125_02	6
00044616	K13106_01	9
00044637	A10001_04	7
00044846	K11106_01	11
00044846	K13305_02	10
00044848	K11105_01	6
00044850	K11105_01	1
00044928	K13120_02	28
00045032	K11800_01	18
00045198	K11211_02	1
00045199	K11211_02	2
00045393	K13055_01	1
00045408	K11106_01	16
00045427	K11120_01	6
00045484	K13000_01	5
00045531	K11105_01	10
00045550	K10001_05	4
00045682	K13125_02	4
00045714	K13144_01	3
00045767N	K13106_01	14
00045821	K11120_01	1
00045823	K11120_01	1
00046201	K13120_02	5
00046289	K13120_02	5
00046299	K13055_01	1
00046300	K11105_01	3
00046366	K13106_01	1
00046441	K13000_01	10
00046567	K11000_02	86
00046603	K13106_01	1
00046629	K11105_01	8
00046698	K13120_02	5
00046806	K13144_01	2
00046842	K11000_02	80
00046844	K11800_01	28
00046844	K13120_02	6
00046848	A10001_02	3
00046865	K13120_02	15
00046902	K13055_01	16
00046933	K11120_01	4

Code	No. table	Pos.
00047026	K11211_02	5
00047041	K13120_02	25
00047077	K13100_04	9
00047077	K13100_05	12
00047077	K13100_06	12
00047078	K13100_04	9
00047078	K13100_05	12
00047078	K13100_06	12
00047079	K13100_04	2
00047079	K13100_05	11
00047079	K13100_06	11
00047916	K13305_02	13
00047934	K13100_04	4
00047960	K13100_04	7
00047972	K11000_02	78
00048021	K03950_01	7
00048022	K03950_01	13
00048023	K03950_01	14
00048026	K11105_01	4
00048028	K03950_01	10
00048029	K03950_01	6
00048046	K11211_02	1
00048048	K11211_02	2
00048057	K11105_01	5
00048105	A10001_04	3
00048241	K03950_01	9
00048279	K03950_01	8
00048280	K03950_01	11
00048290	K03950_01	3
00048359	K10001_05	5
00048427	K03950_01	5
00048474	K13125_02	7
00048474	K13144_01	6
00048550	K11800_01	23
00048691	K11211_02	13
00048714	K13305_02	7
00048747	K11800_01	30
00048774	K13305_02	22
00048820	K11000_01	54
00048820	K13125_02	24
00048853	K13305_02	12
00049015	K13119_01	2
00049037	K13100_05	2
00049037	K13100_06	2
00049058	K13000_01	3
00049510	K11211_02	11
00049538	K11211_02	8
00049643	K13144_01	4
00049784	K13120_02	13
00049852	K11211_02	9
00049876	A10001_02	11
00050010.001	K13100_05	4
00050010.001	K13100_06	4
00050010.001	K13106_03	16
00050095	K13019_01	36
00050095	K13100_04	13
00050096	K13100_04	3
00050117	K11211_02	10
00050258	K13120_02	5
00052938	K11800_01	2
00053558	K13130_01	13
00053558	K13130_01	2
00053559	K11800_01	34
00053560	K11800_01	35
00053602	K11800_01	32
00053669	K13120_02	19
00053748	K11800_01	31

Alphanumeric index

Code	No. table	Pos.
00053754	K11000_01	13
00053754	K13030_01	18
00053754	K13106_02	13
00053785	K13019_01	14
00053785	K13019_01	9
00053804	K13120_02	4
00053808	K11106_01	15
00053809	K11106_01	13
00053814	K11105_01	1
00053943	K11000_01	53
00053952	K11105_01	10
00053952	K11105_01	3
00053955	K13120_02	7
00053957	K13120_02	7
00053965	K13105_01	8
00053966	K13105_01	1
00053967	K13106_01	12
00053967	K13106_02	12
00053967	K13106_02	2
00053968	K13106_01	1
00054001	K13000_01	7
00054066	K13125_02	11
00054067	K11000_01	55
00054067	K13019_01	19
00054067	K13030_01	18
00054076	K13030_01	1
00054080	K11800_01	26
00054087	K11800_01	25
00054104	K13019_01	21
00054107	K13019_01	13
00054115	K13125_02	18
00054119	K13125_02	13
00054141	K13019_01	22
00054220	K11800_01	36
00054238	K13019_01	1
00054306	K13106_01	3
00054306	K13120_02	17
00054344	K11000_01	35
00054344	K13125_02	25
00054346	K11000_01	40
00054399	K13119_01	1
00054399	K13120_02	1
00054401	K13120_02	2
00054401	K13120_02	3
00054411	K13119_01	1
00054411	K13120_02	1
00054429	K13019_01	2
00054430	K13019_01	5
00054433	K11800_01	20
00054448	K13120_02	8
00054450	K13119_01	10
00054451	K13106_01	4
00054452	K13105_01	6
00054508	K13000_01	4
00054537	A10001_04	5
00054559	K13130_01	7
00054567	A10001_02	4
00054647	K13100_04	5
00054649	K13120_02	9
00054678	K13305_02	1
00054861	K11800_01	6
00054907	K13119_01	3
00054909	K11120_01	3
00054911	K11120_01	5
00054915	K13019_01	7
00054919	K11000_02	89
00054919	K13019_01	10

Code	No. table	Pos.
00054920	K13019_01	13
00054923	K13019_01	21
00054927	K13125_02	5
00054935	K13100_06	21
00054935	K13100_06	22
00054936	K13125_02	11
00054938	K13125_02	14
00054940	K11800_01	26
00054944	K13100_04	6
00054945	K13000_01	8
00054955	K10001_05	2
00055132	K11105_01	9
00055133	K11105_01	9
00055239	K11105_01	10
00055294	K13130_01	3
00055302	K10000_02	13
00055303	K10000_02	13
00055304	K10000_02	13
00055313	K13120_02	25
00055389	K11800_01	2
00055400	K11800_01	3
00055444	K13100_04	12
00055445	K13100_04	1
00055455	K13100_06	8
00055455	K13119_01	4
00055512	K13119_01	12
00055515	K13000_01	14
00055517	K13000_01	21
00055557	K13120_02	21
00055794	K13144_01	9
00055795	K13019_01	40
00055795	K13125_02	12
00055795	K13144_01	7
00055803	K11000_02	87
00055924	K11000_02	72
00055974	K13100_06	20
00055974	K13125_02	23
00055975	K11000_01	34
00056479	K13019_01	24
00056544	K13120_02	24
00056751	K13030_01	3
00056782	K11211_02	2
00056784	K11211_02	12
00056784	K11211_02	14
00056843	K13120_02	23
00056913	K13100_05	1
00056914	K13100_06	1
00057047	K13305_02	20
00057074	K13019_01	22
00057101	K11800_01	33
00057446	K10000_02	14
00057567	K13019_01	20
00057681	K11000_01	56
00057912	K13019_01	27
00057912	K13106_02	16
00057912	K13125_02	20
00058031	K13019_01	19
00058468	K13055_01	18
00058505	K13055_01	10
00058510	K11211_02	2
00058512	A10001_02	10
00058519	K13120_02	7
00058548	K13030_01	1
00058551	K13106_02	1
00058587	K13055_01	12
00058666	K13120_02	1
00058776	K13000_01	18

Code	No. table	Pos.
00058793	K10000_02	15
00058794	K11105_01	5
00058797	K11105_01	5
00058827	K13120_02	7
00058836	K13019_01	7
00058837	K13030_01	20
00059036	K13106_02	4
00059133	K02400_05	16
00059209	K13305_02	2
00059234	K13120_02	14
00059246	A10001_02	7
00059247	A10001_02	8
00059249	K11000_01	12
00059249	K13019_01	35
00059269	K11105_01	3
00059277	K13305_02	5
00060076	K11000_01	19
00060077	K11000_01	41
00060083	K11106_01	20
00060083	K13000_01	17
00060116	K11800_01	5
00060119	K11120_01	1
00060120	K11106_01	21
00060120	K13106_02	7
00060127	K13305_02	6
00060128	K13305_02	6
00060129	K13305_02	8
00060130	K13305_02	8
00060151	K13100_06	19
00060160	K13125_02	27
00060162	K13100_06	3
00060162	K13119_01	10
00060162	K13119_01	12
00060254	K13000_01	13
00060283	K11800_01	17
00060283	K13125_02	19
00060285	K13125_02	21
00060319	K13125_02	1
00060330	K13100_05	6
00060331	K13100_06	6
00060490	K11000_02	71
00060505	K13120_02	15
00060585	K10000_02	7
00060586	K10000_02	8
00060587	K10000_02	9
00060588	K10000_02	10
00060589	K10000_02	11
00060590	K10000_02	12
00060591	K10000_02	13
00060858	K11800_01	27
00060866	K11000_02	81
00060947	K10000_02	1
00060948	K10000_02	2
00060949	K10000_02	3
00060950	K10000_02	4
00060951	K10000_02	5
00060952	K10000_02	6
00060999	K13106_03	1
00061030	K11800_01	39
00061036	K13106_01	2
00100013.001	K02400_05	9
00100013.001	K13125_02	2
00100016.005	K02400_05	3
00100016.005	K13106_02	15
00100016.005	K13125_02	2
00100020.050	K11106_01	12
00100020.070	K13305_02	11

Alphanumeric index

Code	No. table	Pos.
00100029.001	K13100_05	16
00100029.010	K13100_06	16
00100032.001	K13100_06	17
00100035.001	K11211_02	3
00100038.001	K13119_01	8
00100042.001	K13100_05	14
00100042.001	K13100_06	14
00100043.001	K13106_03	5
00100046.002	K11000_01	2
00100046.002	K13019_01	28
00100046.002	K13130_01	6
00100053.005	K13120_02	22
00100053.009	K13120_02	22
00100053.015	K13120_02	22
00100059.001	K13019_01	10
00100062.002	K13100_05	13
00100062.002	K13100_06	13
00100063.001	K13100_05	15
00100063.001	K13100_06	15
00100064.001	K13100_05	1
00100064.001	K13100_06	1
00100078.001	K13305_02	17
00100079.001	K11211_02	4
00100081.001	K13030_01	3
00100082.003	K13119_01	6
00100090.001	K13305_02	18
00100091.001	K13305_02	19
00100092.001	K13305_02	16
00100096.001	K13119_01	7
00100115.006	K13000_01	1
00100115.100	K13000_01	7
00100116.005	K02400_05	1
00100116.005	K13106_02	15
00100116.005	K13125_02	2
00100119.001	K11211_02	3
00100124.001	K13019_01	7
00100128.001	K13120_02	2
00100136.001	K11800_01	7
00100138.001	K11211_02	12
00100140.001	K11211_02	3
00100144.001	K13000_01	18
00100147.001	K02400_05	2
00100147.001	K13019_01	14
00100149.001	K02400_05	4
00100149.001	K13019_01	14
00100168.001	K11000_01	6
00100172.001	K13144_01	1
00100178.001	K13120_02	5
00100179.001	K13120_02	5
00100182.003	K11120_01	7
00100183.001	K13019_01	32
00100185.001	K13019_01	33
00100186.013	K13019_01	32
00100190.050	K13125_02	6
00100201.001	K13106_02	15
00100220.001	K13000_01	20
00100236.001	K10001_05	1
00100243.002	K13019_01	8
00100248.002	K13055_01	10
00100250.001	K13305_02	15
00100251.001	K13305_02	14
00100264.002	K13125_02	1
00100267.001	K13030_01	14
00100268.002	K13030_01	5
00100271.001	K13019_01	31
00100274.001	K11106_01	14
00100282.001	K13019_01	38

Code	No. table	Pos.
00100286.001	K11000_01	36
00100290.001	K13125_02	8
00100295.001	K13030_01	19
00100296.001	K11106_01	18
00100300.001	K13030_01	16
00100313.002	K13130_01	1
00100336.001	K13100_05	16
00100336.001	K13100_06	14
00100351.001	K13030_01	8
00100367.001	K13055_01	1
00100380.001	K13030_01	18
00100413.001	K13106_03	2
00100414.001	K13106_03	20
00100414.002	K13120_02	1
00100441.001	K11106_01	19
00100505.001	K11120_01	8
00100505.002	K11120_01	9
00100506.001	K11800_01	9
00100510.001	K11800_01	2
00100514.001	K11800_01	3
00100521.001	K11120_01	10
00100523.001	K11800_01	14
00100525.001	K11800_01	37
00100545.001	K13000_01	15
00100553.001	K13106_03	9
00100556.001	K13106_03	11
00100558.001	K02400_05	17
00100559.001	K02400_05	5
00100559.001	K02400_05	7
00100559.001	K13019_01	5
00100559.001	K13125_02	3
00100560.001	K02400_05	6
00100560.001	K02400_05	8
00100560.001	K13019_01	5
00100560.001	K13125_02	3
00100565.001	K11120_01	7
00100580.001	K11105_01	5
00100618.004	K11000_01	45
00100618.006	K11000_01	46
00100646.001	K11000_01	50
00100647.001	K11000_01	51
00100648.001	K11000_01	52
00100649.001	K11000_01	16
00100717.001	K13000_01	21
00100743.001	K13100_06	22
00100743.001	K13305_02	4
00100749.006	K13000_01	24
00100759.001	K13000_01	22
00100763.001	K13000_01	27
00100766.001	K13000_01	23
00100767.001	K13000_01	25
00100793.001	K11000_01	18
00100793.001	K11000_01	44
00100830.005	K02400_05	10
00100832.005	K02400_05	11
00100851.005	K02400_05	12
00100853.005	K02400_05	13
00100897.001	K11000_01	42
00100959.001	K11000_01	43
10060058	K13125_02	6
10060605	K13019_01	3
10110382	K13000_01	2
10110719	K11105_01	2
10110723	K13305_02	9
10110729	K13019_01	25
10110729	K13019_01	37
10700005	K13100_06	18

Code	No. table	Pos.
10700005	K13119_01	11
10700258	K13000_01	2
10700268	K13019_01	26
10700998	K13030_01	17
10701050	K11800_01	11
10701254	K13030_01	3
10705175	K13019_01	16
10705185	K13019_01	4
10705232	K13125_02	9
10705388	K13106_03	3
10705526	K13120_02	16
10705526	K13120_02	16
10705528	K11211_02	6
10705528	K13120_02	16
10705529	K11211_02	6
10705529	K13120_02	16
10705530	K11211_02	7
10705718	K11800_01	29
10705810	K13100_06	6
10705811	K13100_05	6
10705939	K11800_01	1
23000092	K13106_03	19
23000093	K13106_03	19
23000098T	K13106_03	6
23000100	K13106_03	12
23000196	K13119_01	11
23000197	K11800_01	38
23000288	K13055_01	11
23000299	K13125_02	10
25111006	K13106_01	6
25111006	K13106_02	6
32331436	K13100_06	23
34010009	K11800_01	1
34011031	K13305_02	1
34011032	K13305_02	1
34011033	K13305_02	1
34020017	K13055_01	2
34040168	K13130_01	1
34049006	K02400_05	15
34049006	K13019_01	39
34049006	K13130_01	4
34049007	K02400_05	14
34049007	K13019_01	39
34049007	K13130_01	4
34070167	K13305_02	3
34100021	K13000_01	6
34160024	K13030_01	13
34200353	K13000_01	15
35002511	K13019_01	17
36130008	K13125_02	6
36201035	K13030_01	4
36230017	K13100_05	10
36230017	K13100_06	10
36230017	K13106_03	8
36322006	K13055_01	4
36404007	K13106_03	7
36404013	K13125_02	6
36404053	K13125_02	6
36404054	K13030_01	15
36404054	K13106_03	17
36404054	K13125_02	26
36901804	K13144_01	10
36901955	K13019_01	2
36901955	K13030_01	2
36930110	K11800_01	10
36930111	K11800_01	22
36990017	K13106_03	4

Alphanumeric index

Code	No. table	Pos.
36990028	K13106_01	5
37030408	K13030_01	13
37420601	K13030_01	9
37430400	K13030_01	13
38120004	A10001_04	8
38120070	A10001_02	9
38120106	K13100_05	9
38120106	K13100_06	9
38120121	K13120_02	10
38120127	K13100_05	5
38120127	K13100_06	5
38120127	K13130_01	5
38120128	K13119_01	11
38221018	K13120_02	18
38228071	K13100_04	10
38228072	K11800_01	15
38228072	K13019_01	15
38228072	K13100_05	3
38228072	K13130_01	10
38228073	K13030_01	12
38228073	K13055_01	7
38228073	K13100_04	11
38228073	K13106_01	4
38228073	K13106_02	17
38228073	K13106_03	15
38228073	K13130_01	14
38228074	K13055_01	8
39930001	K13125_02	15
39930001	K13144_01	8
45010208	K13120_02	20
45010209	K13120_02	20
69000288	K13055_01	3
69000400	A10001_02	1
69000408	A10001_02	2
69000417	K13030_01	2
69000982	A10001_04	1
69000983	A10001_04	2
69200089	K11000_01	20
69200094	K11000_01	31
69200131	K13055_01	9
69200132	K13100_05	17
69200133	K11000_01	2
69200133	K11800_01	16
69200133	K13100_04	14
69200133	K13125_02	19
69200134	K11000_01	3
69200134	K13019_01	34
69200134	K13030_01	18
69200134	K13100_05	7
69200134	K13100_06	7
69200134	K13106_02	14
69200134	K13125_02	17
69200134	K13130_01	11
69200135	K11000_01	4
69200135	K13106_03	10
69200135	K13125_02	16
69200135	K13130_01	9
69200136	K11000_01	8
69200136	K13055_01	6
69200137	K11000_01	7
69200137	K11000_01	9
69200137	K13055_01	13
69200138	K13055_01	5
69200139	K11000_01	11
69200139	K13019_01	18
69200140	K13106_01	13
69200140	K13106_03	13

Code	No. table	Pos.
69200141	K11000_01	15
69200141	K13030_01	11
69200142	K11000_01	14
69200142	K13019_01	30
69200148	K11000_01	30
69200149	K13130_01	12

Contacts

HEADQUARTERS, PRODUCTION PLANT AND R&D CENTERS

Rancilio Group s.p.a.
Viale della Repubblica 40
20010 Villastanza di Parabiago
Milano - Italy
Tel +39 0331 408200
Fax +39 0331 551437
www.ranciliogroup.com
info@ranciliogroup.com

Egro Suisse AG
Bahnhofstrasse 66
5605 Dottikon - Switzerland
Tel. +41 (0)56 616 95 95
Fax +41 (0)56 616 95 97
www.egrocoffee.com
info@egrocoffee.com

WORLDWIDE BRANCH LOCATIONS

SPAIN
RancilioGroup Espana, s.a.
Gran Vía de Carlos III, 84 3ª
Edificio Trade
08028 Barcelona - Spain
Ph. +34 902 884 275
Ph. +34 934 923 414
Fax +34 934 965 701
www.ranciliogroup.com
info-es@ranciliogroup.com

PORTUGAL
Rancilio Group Portugal Lda
Estrada da Falagueira nº 68 E
2700-365 Amadora-Lisboa - Portugal
Ph. + 351 21 019 10 91
Fax + 351 21 019 10 91

Rua Nova do Seixo 1282
4465-706 Leca do Balio-Porto - Portugal
Ph. + 351 22 010 14 19
Fax + 351 22 010 14 19
www.ranciliogroup.com
info-pt@ranciliogroup.com

GERMANY
Rancilio Group Deutschland GmbH
Talstrasse 27
97990 Weikersheim - Germany
Ph. +49 7934 99 29 30
Fax +49 7934 99 29 330
www.ranciliogroup.de
info-de@ranciliogroup.com

SWITZERLAND
Egro Suisse AG
Bahnhofstrasse 66
5605 Dottikon - Switzerland
Tel. +41 (0)56 616 95 95
Fax +41 (0)56 616 95 97
www.egrosuisse.ch
info@egrosuisse.ch

USA/CANADA
RancilioGroup North America Inc.
1340 Internationale Parkway / Suite 200
Woodridge, IL 60517 - U.S.A.
Ph: +1 630 914 7900
Fax: +1 630 914 7901
Toll Free: +1 877 726 2454
www.ranciliogroup.com
info@ranciliogroupna.com