TAV.10045/08

PARTI ELETTRICHE / ELETTRONICHE - ELECTRIC PARTS / ELECTRONIC
PARTES ELECTRICAS / ELETTRÓNICAS

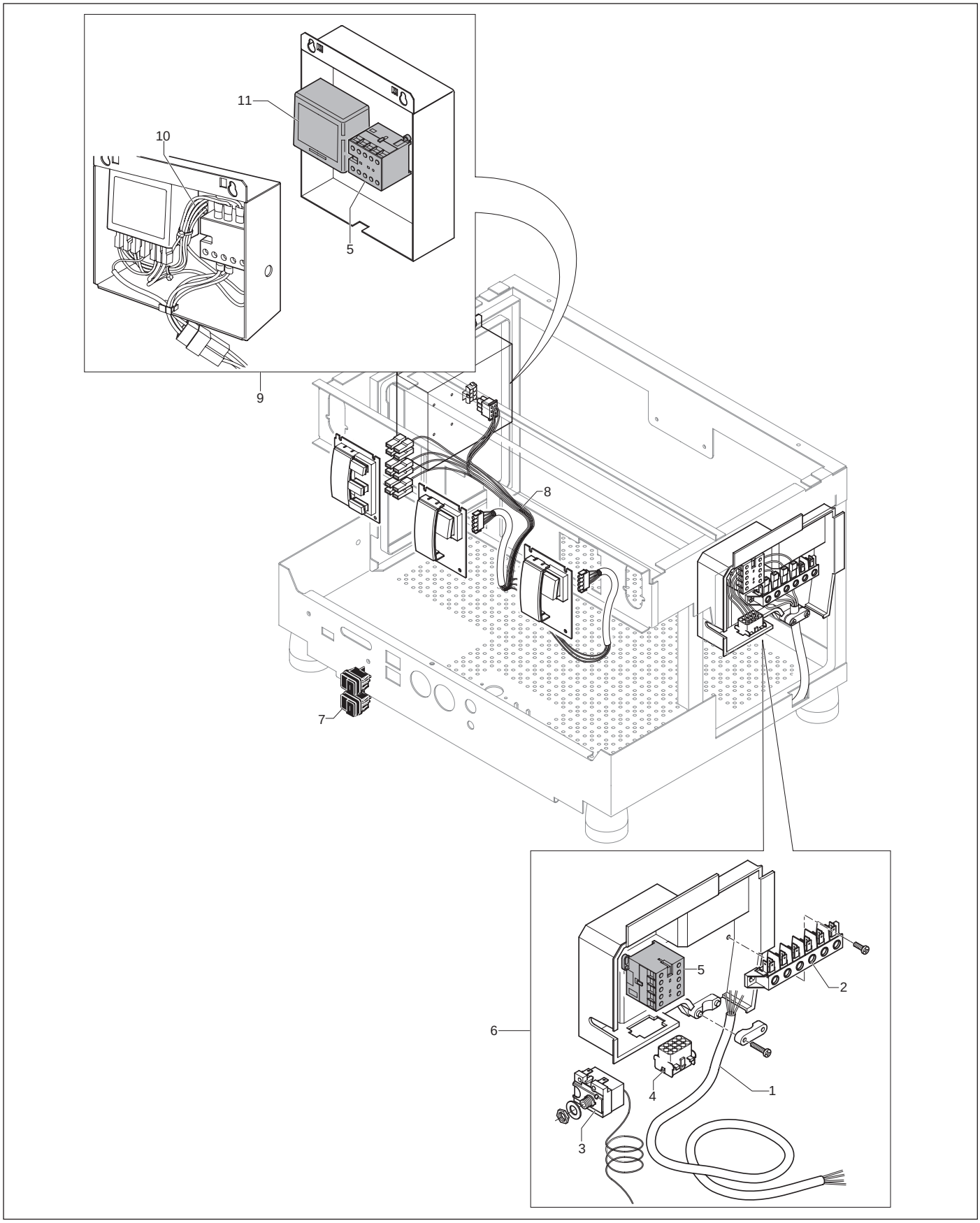

TAV.10045/08

PARTI ELETTRICHE / ELETTRONICHE - ELECTRIC PARTS / ELECTRONIC
PARTES ELECTRICAS / ELETTRÓNICAS

Rif.	CODICE	DESCRIZIONE	DESCRIPTION	DESCRIPCION
001	**34300073**	CAVO H07RN-F 5C.SEZ.2,5 L=2200	CABLE H07RN-F 5C. SEZ.2,5 L=2200	CABLE H07RN-F 5C. SEZ.2,5 L=2200
	34300079	CAVO H07RN-F 5C.SEZ.4 L=2000	CABLE 5C. 4 SEZ.	CABLE 5C. SEZ.4
002	**34150026**	MORSETTIERA 4 POLI	TERMINAL BOARD	JUNTA DE TERMINAL
003	**34200097**	SALVARESISTENZA EGO MONOFASE	SAVE- HEATING ELEMENT EGO MONOF.	SALVARESIST.EGO MONOF.
004	**10110655**	CABLAGGIO ALIMENTAZ. CL 10/S	WIRING POWER CL 10/S	CABLE ALIMENTACIONES CL 10/S
005	**34200332**	MINICONTATTORE ABB 220/240V B6	220/240V B6-40-00 F MINI-CONT	MINI-CONTACTOR 220/240V B6-40
006	**10110359**	SCATOLA ALIMENT.MC/07 230V	ELECTRICK BOX MC/07 V230	CAJA ALIMENTATIONE MC/07 230V
007	**34030970**	INTERR.BIP.LUM.VERDE	GREEN SWITCH	INTERRUPTOR VERDE
008	**10110633**	CABLAGGIO AT CL10/07 - S 2GR	WIRING AT CL 10/07 - S 2GR	CABLE AT CL 10/07 - S 2GR
	10110634	CABLAGGIO AT CL10/07 - S 3GR	WIRING AT CL 10/07 - S 3GR	CABLE AT CL 10/07 - S 3GR
	10110635	CABLAGGIO AT CL10/07 -S 4GR	WIRING AT CL 10/07 - S 4GR	CABLE AT CL 10/07 - S 4GR
009	**10110361**	SCATOLA CABLATA S-RE C10/07	S-RE C10/07 BOX COMPLETE	CAJA S-RE C10/07 ASSEMBLATA
010	**10110653**	CABLAGGIO CENTRALINA CL 10/07 S	WIRING TRANSDUCTOR RALS CL 10/07 S	CABLE TRANSDUCTOR RALS CL 10/07 S
011	**34070029**	CENTR. RALS 220/240V	TRANSDUCTOR RALS 220/240V	TRANSDUCTOR RALS 220/240V