TAV.10010/08

CARROZZERIA - BODY - CARROCIERIA

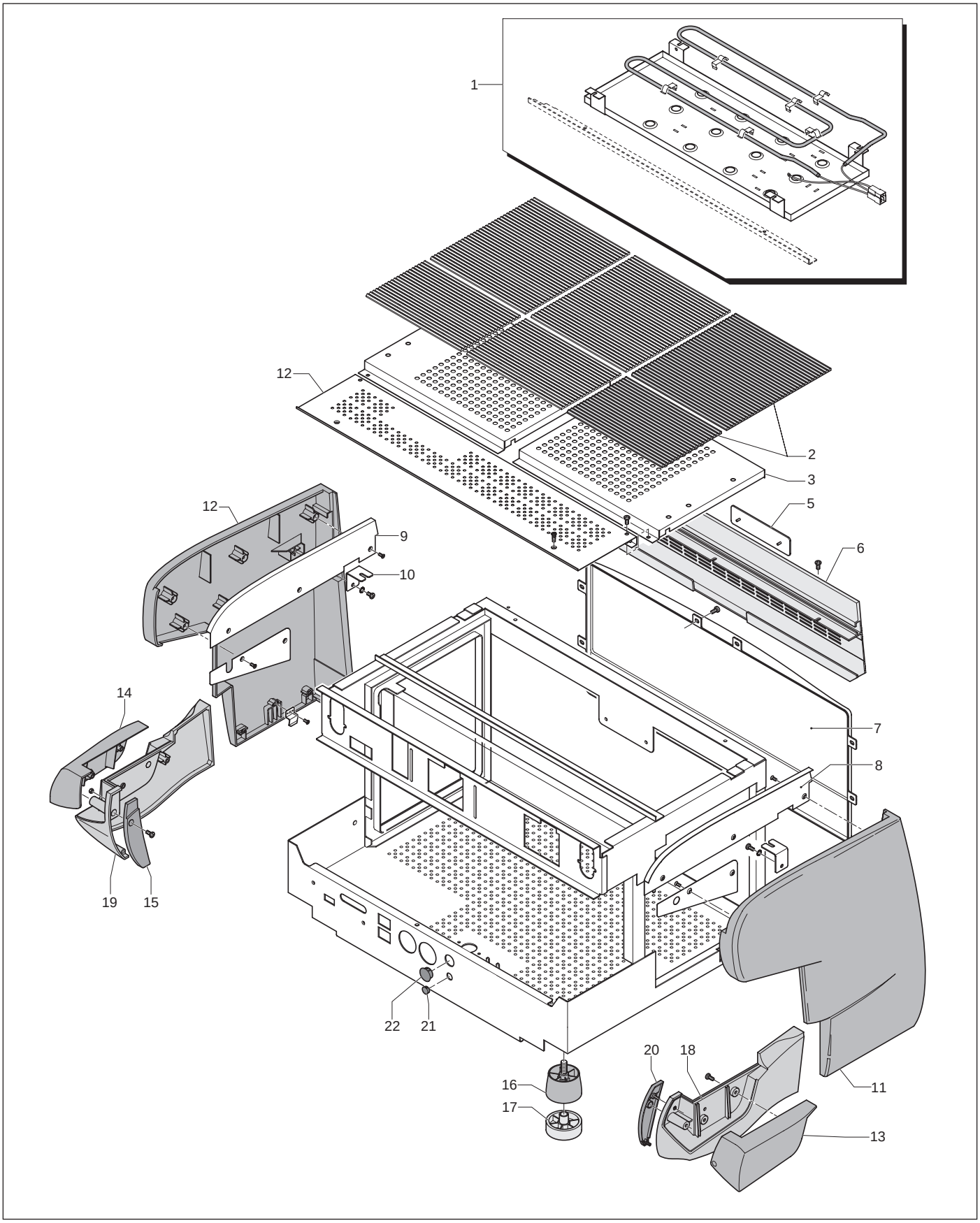

RANCILIO
coffeeing the World

TAV.10010/08

CARROZZERIA - BODY - CARROCIERIA

Rif.	CODICE	DESCRIZIONE	DESCRIPTION	DESCRIPCION
001	**10705420**	ASSIEME SCALD.2GR.C10	KIT HEATING CUP 2GR	KIT CALIENTA TAZAS2GR
	10705421	ASSIEME SCALD.3GR.	KIT HEATING CUP 3GR	KIT CALIENTA TAZAS 3GR
	10705422	ASSIEME SCALD.4GR.	KIT HEATING CUP 4GR	KIT CALIENTA TAZAS 4GR
002	**10705371**	SERIE GRIGLIE SCALD.PLAST.2GR	SET PLAST.CUP-WARMER GRATES 2GR.	SERIE PARILLA CALIENTA TAZAS PLAST.2GR
	10705372	SERIE GRIGLIE SCALD.PLAST.3GR	SET PLAST.CUP-WARMER GRATES 3GR	SERIE PARILLA CALIENTA TAZAS PLAST.3GR
	10705373	SERIE GRIGLIE SCALD.PLAST.4GR	SET PLAST.CUP-WARMER GRATES 4GR.	SERIE PARILLA CALIENTA TAZAS PLAST.4GR
003	**10705374**	SERIE GRIGLIE SCALD.INOX 2GR	SET CUP-WARMER GRATES INOX 2GR	SERIE PARILLA CALIENTA TAZAS INOX 2GR
	10705375	SERIE GRIGLIE SCALD.INOX 3GR	SET CUP-WARMER GRATES INOX 3GR.	SERIE PARILLA CALIENTA TAZAS INOX 3GR
	10705376	SERIE GRIGLIE SCALD.INOX 4GR	SET CUP-WARMER GRATES INOX 4 GR.	SERIE PARILLAS CALIENTA TAZAS INOX 4GR
005	**42200123**	TARGH.RANCILIO MM.145	RANCILIO PLATE MM.145	TARJETA RANCILIO MM.145
006	**24902044**	FASCIA POSTERIORE CL.10/07 2 GR	REAR BOARD 2GR. CL 10/07	CARA POSTERIOR 2 GR. CL.10/07
	24902045	FASCIA POSTERIORE CL.10/07 3 GR	REAR BOARD 3GR. CL 10/08	CARA POSTERIOR 3 GR. CL.10/08
	24902046	FASCIA POSTERIORE CL.10/07 4 GR	REAR BOARD 4GR. CL 10/09	CARA POSTERIOR 4 GR. CL.10/09
007	**31312012B**	FRONTALE 2GR. GRIGIO CL.10/07	FRONT PANEL 2GR.GREY CL10/07	FRONTAL 2GR. GRIS CL10/07
	31312013B	FRONTALE 3GR. GRIGIO CL.10/07	FRONT PANEL 3GR.GREY CL10/07	FRONTAL 3GR. GRIS CL10/07
	31312014B	FRONTALE4GR. GRIGIO CL.10/07 R	FRONT PANEL 4GR.GREY CL10/07	FRONTAL 4GR. GRIS CL10/07
008	**32330990**	SPALLETTA DX	SUPPORT DX	ESPALDA DX
009	**32330991**	SPALLETTA SX	SUPPORT SX	ESPALDA SX
010	**32330992**	SQUADRETTA SPALLA	SUPPORT SQUARE	ESCUADR. ESPALDA
011	**10705476**	ASSIEME FIANCATA DX CL 10/07	SIDE PANEL DX CL 10/07	LATERAL DX CL 10/07
012	**10705477**	ASSIEME FIANCATA SX CL 10/07	SIDE PANEL SX CL 10/07	LATERAL SX CL 10/07
013	**38123668**	PROTEZ.LATERALE BAC. DX CL10/07	GUARD BAND SIDE PANEL DX CL10/07	BANDA INFERIOR LATERAL DX CL 10/07
014	**38123667**	PROTEZ.LATERALE BAC. SX CL10/07	GUARD BAND SIDE PANEL SX CL10/07	BANDA INFERIOR LATERAL SX CL 10/07
015	**38123674**	CHIUSURA FIANCO SX CL 10/07	STOPPER SIDE PANEL SX CL10/07	CIERRE BANDA INFERIOR LATERAL SX CL 10/07
016	**38123568**	PIEDINO+GOMMINO	FOOT+RUBBER	PIE+GOMME
017	**38123852**	RIALZO+GOMMINO X PIEDINO C10 -	SUPOPORT +RUBBER FOR FOOT	REALZO +JUNTA PIE
018	**21300766B**	LATER.BAC.DX INFER.CL10/07 GRIGIO	LOWER SIDE PANEL DX CL10/07 GREY	LATERAL INFER. DX GRIS CL10/07
019	**21300765B**	LATER.BAC.SX INFER.CL10/07 GRIGIO	LOWER SIDE PANEL SX CL10/07 GREY	LATERAL INFER. SX GRIS CL10/07
020	**38123673**	CHIUSURA FIANCO DX CL 10/07	STOPPER SIDE PANEL DX CL10/07	CIERRE BANDA INFERIOR LATERAL DX CL 10/07
021	**38221004**	TAPPO A SCATTO D.22	CAP DIAM. 22	TAPON D. 22
022	**38221016**	TAPPO SCATTO D.32 NERO	CAP D.32 BLACK	TAPA D.32 NEGRO

TAV.10030/08

GRUPPO I-STEAM - I-STEAM GROUP - GRUPO I-STEAM

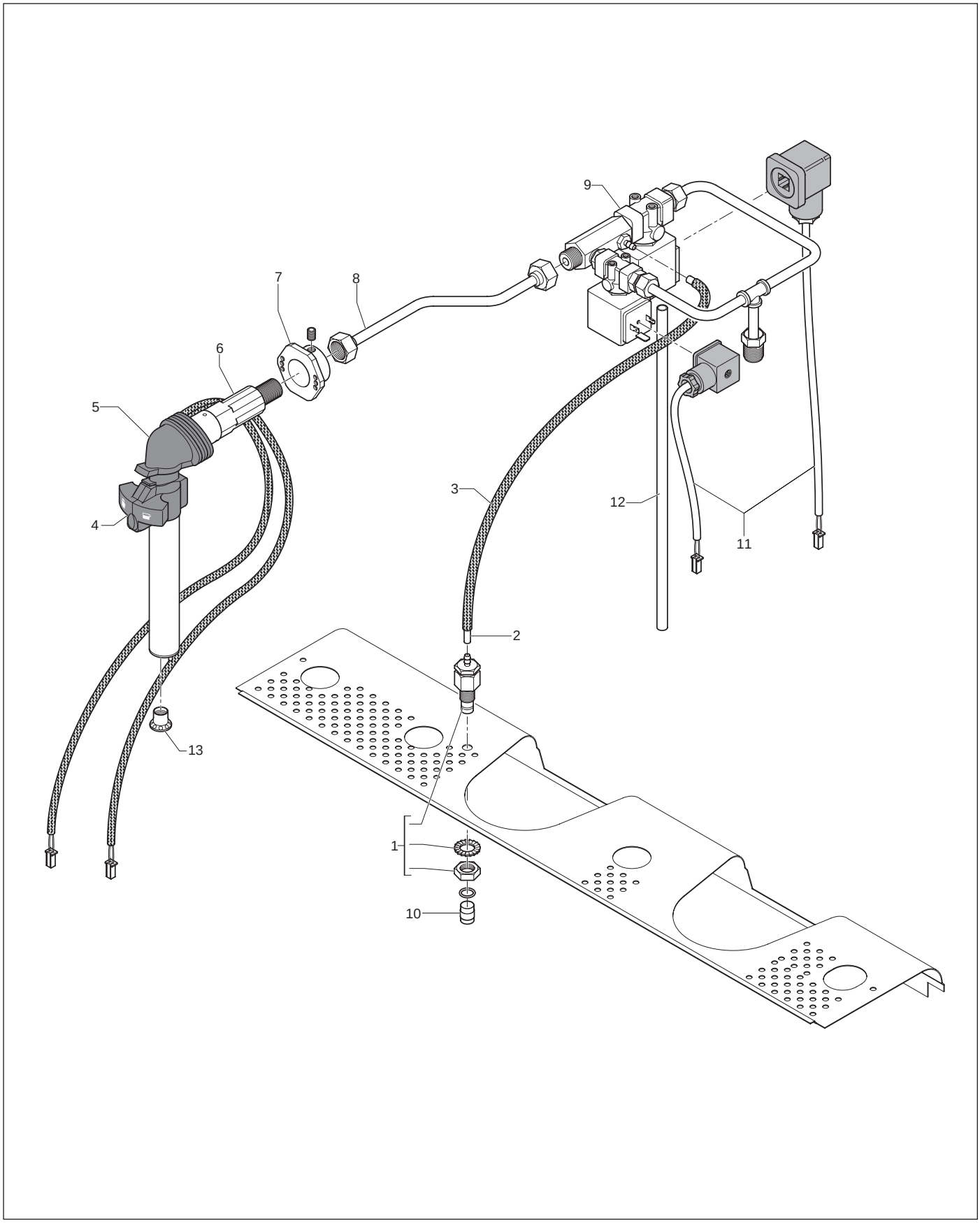

TAV.10030/08

GRUPPO I-STEAM - I-STEAM GROUP - GRUPO I-STEAM

Rif.	CODICE	DESCRIZIONE	DESCRIPTION	DESCRIPCION
001	**10705320**	VALVOLA INGRESSO ARIA ISTEAM COLL.	VALVE INPUT AIR ISTEAM	VALVULA ENTRADA AIRE ISTEAM
002	**38228016**	TUBO SILICONE D.5X3	SILICON TUBE D5X3	TUBO D.5X3
003	**34209124**	GUAINA TRECCIATA POLIESTER UL 94	SHEATH PLAITED POLIESTER UL94	CABLO TRENZADA POLIESTER UL94
004	**10705359**	PULSANTIERA COMANDO TSC C8/DE	TSC P.B PANEL CL10	TECLADO TSC CL 10
005	**36990017**	CUFFIETTA ISTEAM C10	STEAM SHROUD ISTEAM C10	COFIA VAPOR ISTEAM C10
006	**10705343**	ASSIEME ISTEAM INOX CORTO	KIT ISTEAM INOX SHORT C10/07	KIT ISTEAM INOX C10/07
007	**23175032**	BUSSOLA FISS.CORPO C10 -OT-	COMPASS FIXING C10	COMPASS FIJACIÓN C10
008	**10043067**	TUBO 8X6X200 F3/8-F3/8 2-3-4GR.	PIPE 8X6X200 F3/8-F3/8 2-3-4GR.	TUBO 8X6X200 F3/8-F3/8 2-3-4GR.
009	**10705575**	ASSIEME ELETTR. -VENTURI ISTEAM	ASSEMBLY ELETTR. -VENTURI ISTEAM	JUNTOS ELETTR. -VENTURI ISTEAM
010	**23000092**	UGELLO ISTEAM D. 2,5	NOZZLE ISTEAM D. 2,5	INJECTOR ISTEAM D. 2,5
	23000093	UGELLO ISTEAM D. 3,5	NOZZLE ISTEAM D. 3,5	INJECTOR ISTEAM D. 3,5
011	**10110420**	CABLAGGIO EV.GRUPPO/ACQUA	WIRING GROUP/WATER EV.	CABLES EV. GRUPO/AGUA
012	**38228002**	TUBO SILICONE 9X6X560	SILICONE HOSE 9X6X560	TUBO SILICONE 9X6X560
013	**23000098**	SPRUZZATORE SILENZIATO ISTEAM	SPRAYER ISTEAM	SURTIDOR ISTEAM