EGRO

BUILT FOR EXCELLENCE

ENXTQM v.108

SPARE PARTS CATALOGUE

en-US

EGRO NEXT QUICK MILK

EGRO NEXT

Index

1001_04 - AS Automatic spout option.... 4
1001_50 - NEXT Housing.... 6
1001_51 - Next Drip tray.... 8
1010 - GUM grounds drawer under machine.... 10
2000_03 - Coffee line from S/N 12009304 (DHE boiler).... 12
2001_02 - Water/Steam Lines from S/N 1207595.... 16
2002_02 - Coffee Brewing Group (BC18) from S/N 12009467.... 18
2002_03 - 22
2002_50 - Coffee Brewing Group BC 22.... 26
2002_55 - 28
2003_50 - Clever Steam NEXT.... 30
2004_50 - Water Spout NEXT.... 32
2005 - Bean Hopper-Grinders.... 34
2006 - Steam Boiler - steam valve block XP/QM.... 36
2007_02 - Water Inlet System from S/N 12007595.... 40
3000_03 - Electronic Board 2 Gen.... 44
3001 - CPU Board Connections.... 46
6003_02 - MILK SYSTEM QM NMS.... 48
4002 - ISTEAM NEXT.... 50
Alphanumeric index.... 52

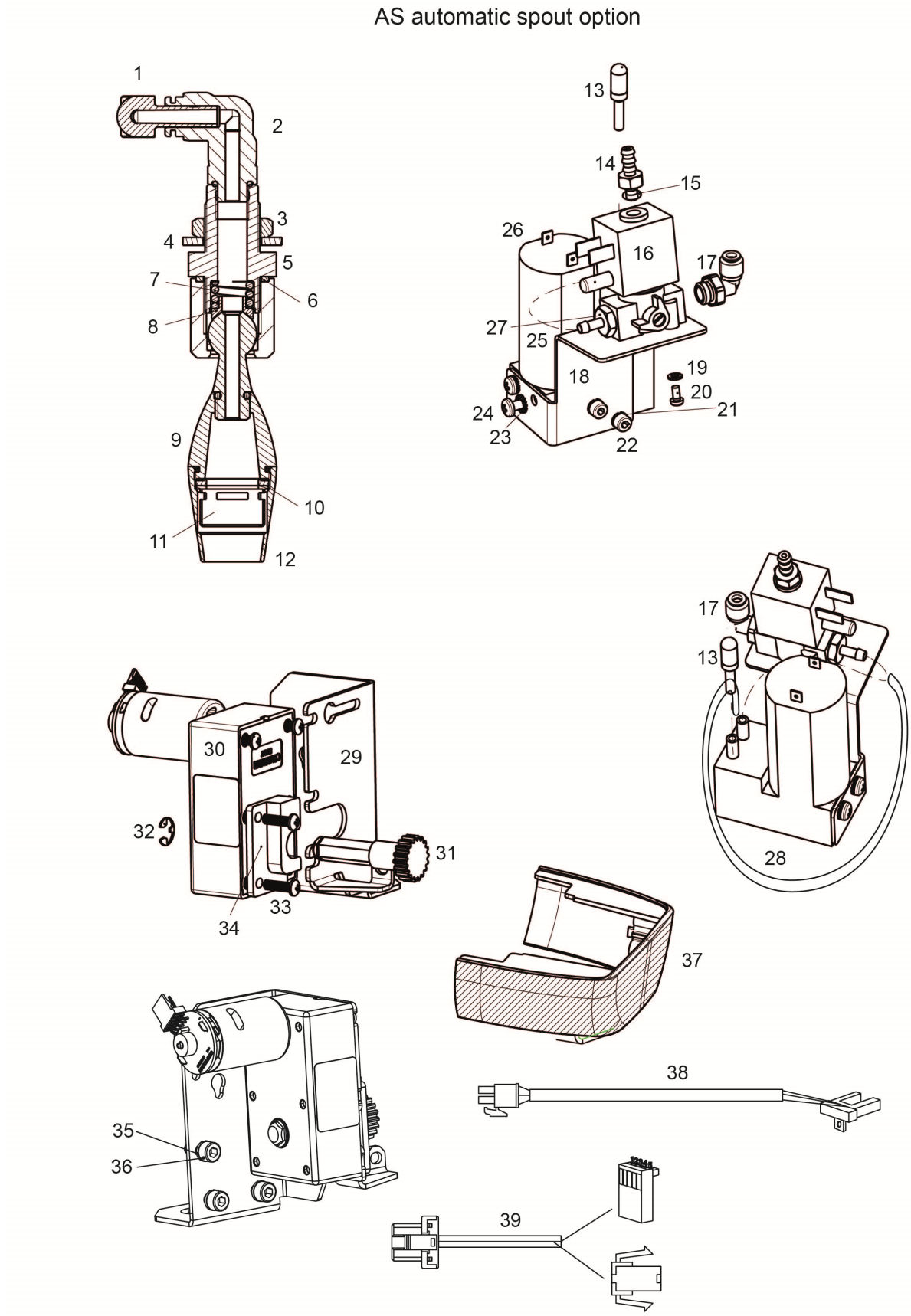
AS automatic spout option
1
2
3
4
5
6
7
8
9
10
11
12
13
14
15
16
17
18
19
20
21
22
23
24
25
26
27
28
29
30
31
32
33
34
35
36
37
38
39

Pos.	Code	Description	Notes
1	69200130	Elbow Connector 6X6	
2	69200140	Elbow Connector6 X G1/8 Ppsu	
3	26220005	Flat Nut 3/8	
4	37431600	Outer Toothed Washer D16	
5	23000332	Right Water Wand Connection One As	
6	36220009	Gasket Nut Note Teflon	
7	39110038	Spring Connection Steam Tap	
8	36930016	Gasket Teflon Connection Steam Wand	
9	10049014	Water Outlet	
	36404022	O-RING 6,4 X 1,9 R5A	
10	36301040	O-Ring Filter Jet Breaker	
11	25135019	Mixing Nozzle	
12	25135017	Upperpart Water Sprayer	
13	69150018	Filter Airpump Nms	
14	23000277	Flow Limiter D. 3Mm Connection M5 X 6	
15	36404056	O-Ring 3,68X1,78 Epdm 70Sh Nsf Teflon 2015	
16	34040158	Valve 3/2 24V 5.5W	
17	69200147	Elbow Connector 4 X G1/8 Ppsu Small	
18	32332077	Air Pump Bracket As	
19	37420300	Elastic Washer 3 X 0,8	
20	00001062	Raised Cheese Head Screw M3 X 6 Mm	
21	37420401	Elastic Washer Diam.4	
22	00100001.208	Screw M4X8 Tcei Inox	
23	37430400	Toothed Washer D4	
24	00001069	Screw Tcb Cross Ph Inox M4X6	
25	34011038A	Air Pump 24Vdc/16	
26	34200358		
27	00054938	Threaded Male Nipple With Washerg 1/8 And Gasket	
28	00049209	Silicon Hose D. 7,0 X 3,0 Mm	
29	32332038	As Motor Bracket	
30	34010014	Encoder Motor 24V As	
31	36990083	Gear Wheel With Shaft	
32	37510600	Snap Ring D. 6	
33	37155012	Screw 4 X 14 Tcb Ph	
34	38120317	Gear Bearing Holder	
35	37420501	Elastic Washer Diam.5	
36	00000932	Hex Socket Head Screw M5 X 12 Mm	
37	38120589	Aesthetic Protection Outlet One As	
38	34070313	Sensor As Slider	
39	10110961	Wiring As	

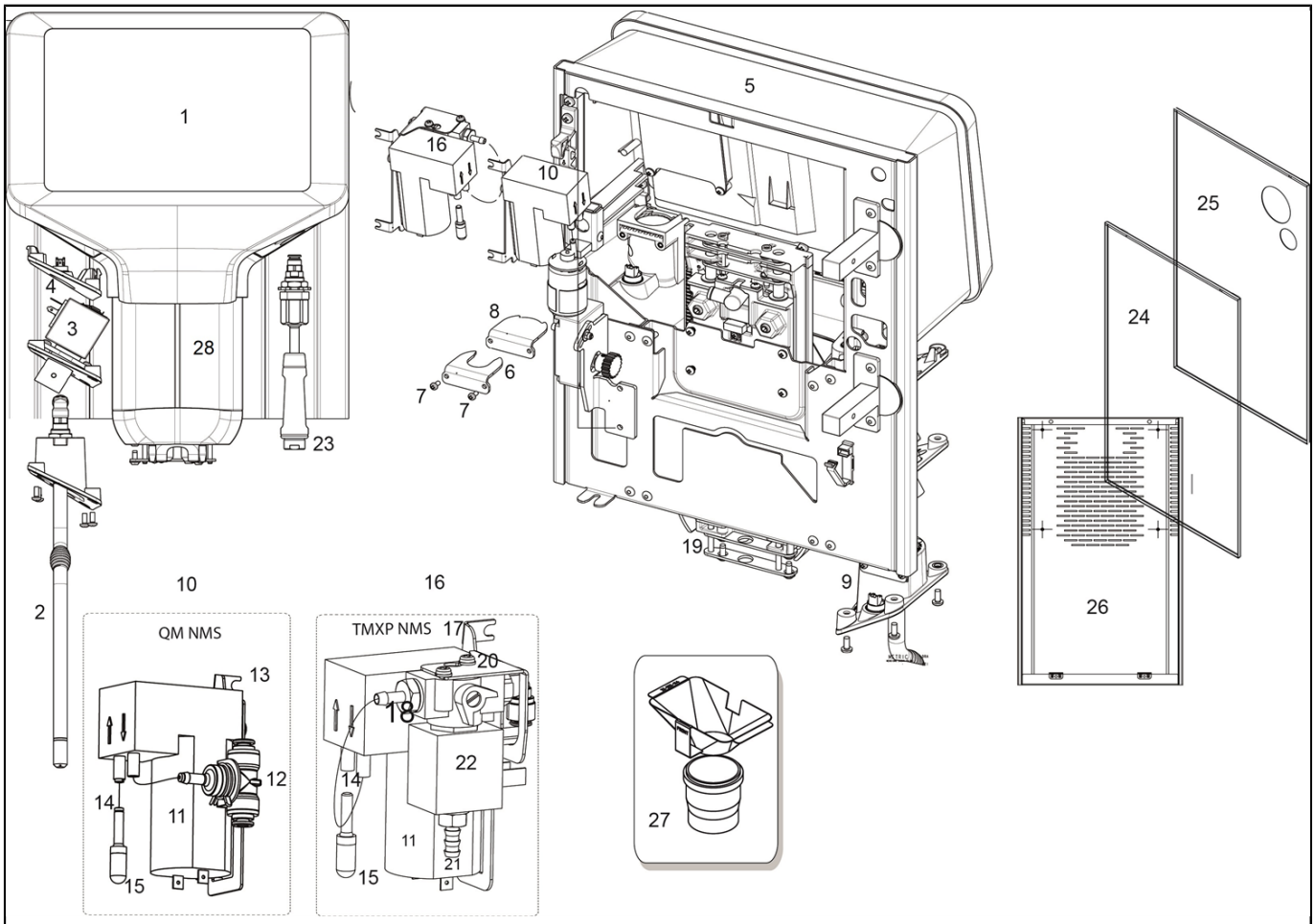
1
2
3
4
5
6
7
7
8
9
10
10
11
11
12
13
14
14
15
15
16
16
17
18
19
20
21
22
23
24
25
26
27
28
QM NMS
TMXP NMS

Pos.	Code	Description	Notes
1	10701753	Display Next Grey	
	10701898	Display Next Black	
2	38120344	Closing Cap Cool Touch Wand	
3	34040194		
4	38120343	Pinch Valve Cap	
6	32331613	Bracket Isteam-Tea Next	
7	00001062	Raised Cheese Head Screw M3 X 6 Mm	
8	32331614	Bracket No Tea Next	
9	10701434	Led Cup Light	
	38120344	Closing Cap Cool Touch Wand	
10	10701466	air pump assy. Next QM	
11	34011038A	Air Pump 24Vdc/16	
12	69200128	T Fast Connector With Check Valve	
13	00001069	Screw Tcb Cross Ph Inox M4X6	
	32332204	Bracket Air Pump Next QM	
	37430400	Toothed Washer D4	
14	38120127	Restriction Ring Little White	
15	69150018	Filter Airpump Nms	
16	10701465	Air Pump Next TM XP	
17	00001069	Screw Tcb Cross Ph Inox M4X6	
	32332203	Bracket Air Pump Next Tm Xp	
	37430400	Toothed Washer D4	
18	00054938	Threaded Male Nipple With Washerg 1/8 And Gasket	
	27350014	Copper Gasket 12.5X9.8X1.5	
19	10701680	Retrofit Kit Next Automatic Spout	
	69200147	Elbow Connector 4 X G1/8 Ppsu Small	
20	00001062	Raised Cheese Head Screw M3 X 6 Mm	
	37420300	Elastic Washer 3 X 0,8	
21	23000277	Flow Limiter D. 3Mm Connection M5 X 6	
	36404056	O-Ring 3,68X1,78 Epdm 70Sh Nsf Teflon 2015	
22	34040158	Valve 3/2 24V 5.5W	
23	10701430	Hot Water Wand	
24	32551068A	Side Panel Next	
25	32551069A	Side Panel Right Next+Powder Module	
	32551117A	Side Panel Next With Holes	
26	32551067A	Rear Panel Next	
27	10701527	Kit Direct Grounds Funnel 2018	
28	10701422	Cover Outlet Coffee Next Assy.	
	37900115	Ball 1/4 100	
	39110062	At Ball Spring	

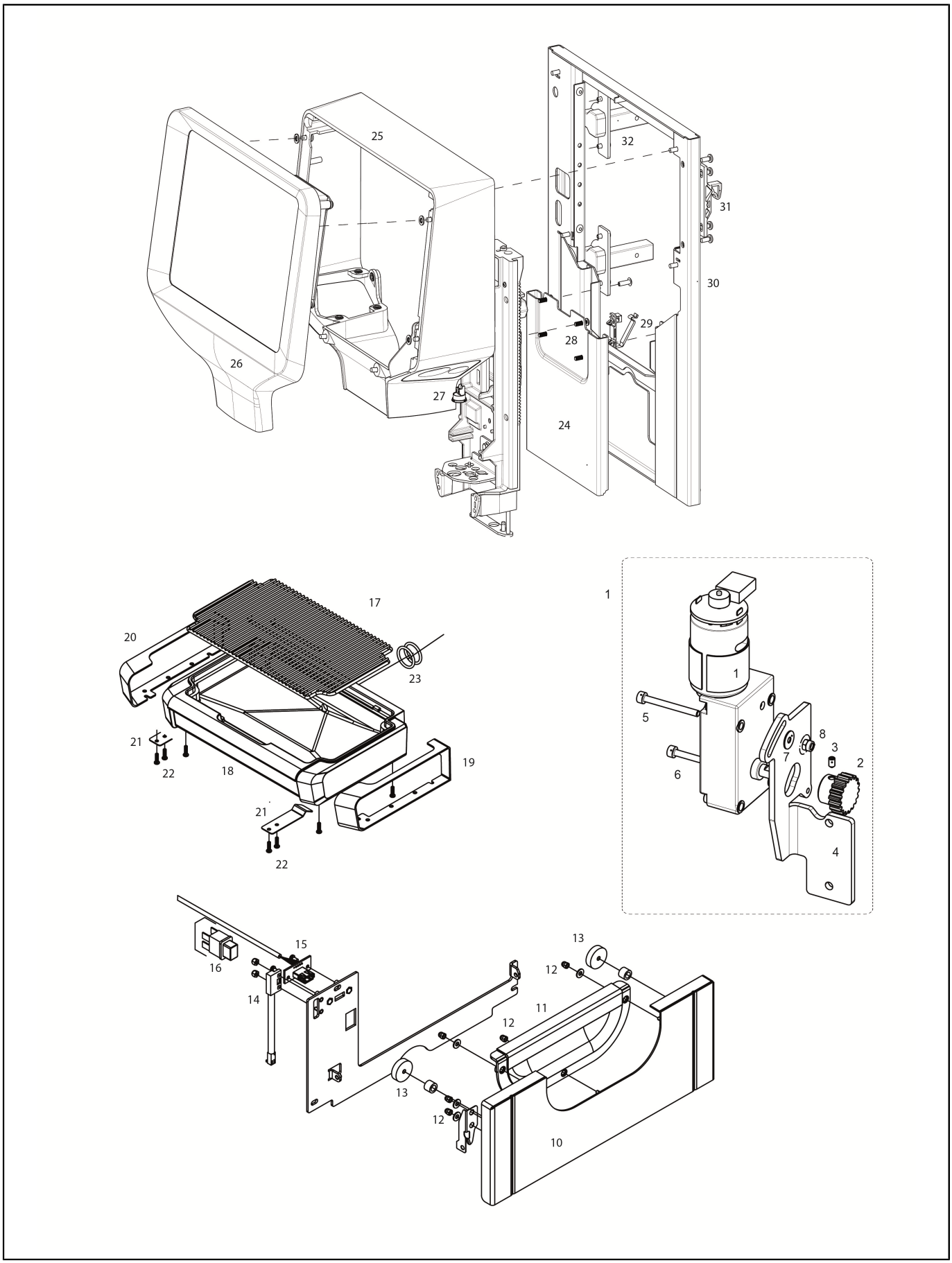
25
32
31
30
29
28
26
27
24
17
20
23
21
22
18
19
21
22
1
1
5
8
3
7
2
6
4
15
16
14
13
12
11
12
13
12
10

Pos.	Code	Description	Notes
1	10701435	Motor As+ Assy.	
	34010017	Encoder Motor 24V As+	
2	36990096	Gear Wheel As+	
3	37090405	Screw M4X5 St Ei Fezn	
4	32332186	Bracket Motor As+	
5	37060330	Screw M3 X 30 Tcei Inox	
6	37090405	Screw M4X5 St Ei Fezn	
7	37410300	Plane Washer D3.2X9	
8	00001514	6-Edge Nut Self Locking M3	
10	10701629	Drawer Door Next	
	10701860	Coffee Waste Drawer Door Next grey with lock	
	10701884	Drawer Door Next Black	
	10701885	Drawer Door Next Black With Lock	
11	38120097	Drawer Handle	
12	37370301	Nut M3 Inox	
13	00017719	Washer M4 Inox	
	69000683	Rubber Part With Magnet 22X6 M4	
14	34020125	End Switch Spindle Motor	
15	34070075	Wiring Set J6 With Usb Connector (Touch Pad)	
16	10701758	Main Switch+Cover	
17	10781313	Cup Grid Next	
18	10701497	Drain Tray assy. Next	
19	32332185	Drain Tray Bracket Right Next	
20	32332184	Drip Tray Insert Left Next	
21	39920015	Clamp	
22	00046069	Crossed Raised Cheese Head Screw 4 X 14 Mm	
23	36405002	O-Ring Epdm 70Sh 3050 Gray	
24	32551383A	Front Plate Next Black	
25	38120340	Front Panel Bracket Next	
26	10702046	KIT DISPLAY NEXT BLACK	
	10702047	KIT DISPLAY NEXT GREY	
27	10701434	Led Cup Light	
28	00046069	Crossed Raised Cheese Head Screw 4 X 14 Mm	
29	34200009	Keyboard Flat Cable Holder C5-C7/16	
30	32551119A		
31	69000424	Hook Front Panel	
32	37900741		
	69000319	Hinge Salice Next	

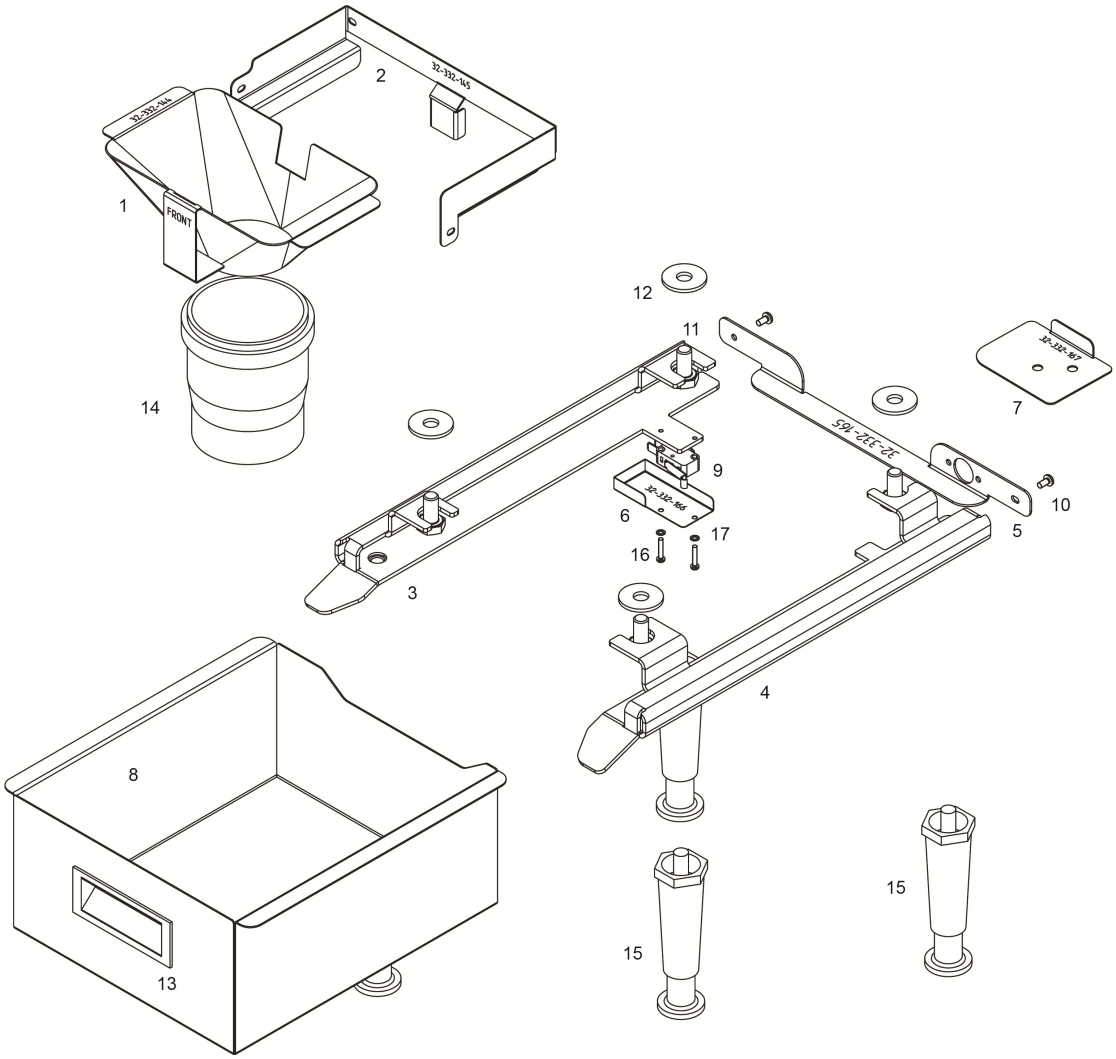
32-332-144
FRONT
32-332-145
32-332-166
32-332-165
32-332-167
1
2
3
4
5
6
7
8
9
10
11
12
13
14
15
15
16
17

Pos.	Code	Description	Notes
1	10701395	Retrofit Kit Gum	
	32332283	funnel waste coffee One/2018	
2	32332284		
3	32332163		
4	32332164		
5	32332165		
6	32332166	Switch Safety Cover	
7	32332167		
8	32332168	Coffee Waste Drawe Under Machine One/Byo	
9	34100021	Micro Switch	
10	37030408	Screw M 4 X 8	
11	37041020		
12	37410303		
13	38120054	Handle Coffee Waste Drawer	
14	38910003	Drain Pipe Coffee 75X100Mm	
15	69000174	Machine Foot High	
16	00001065	Raised Cross Head Screw M3 X 16 Mm	
17	00030494	Lock Washerm3	

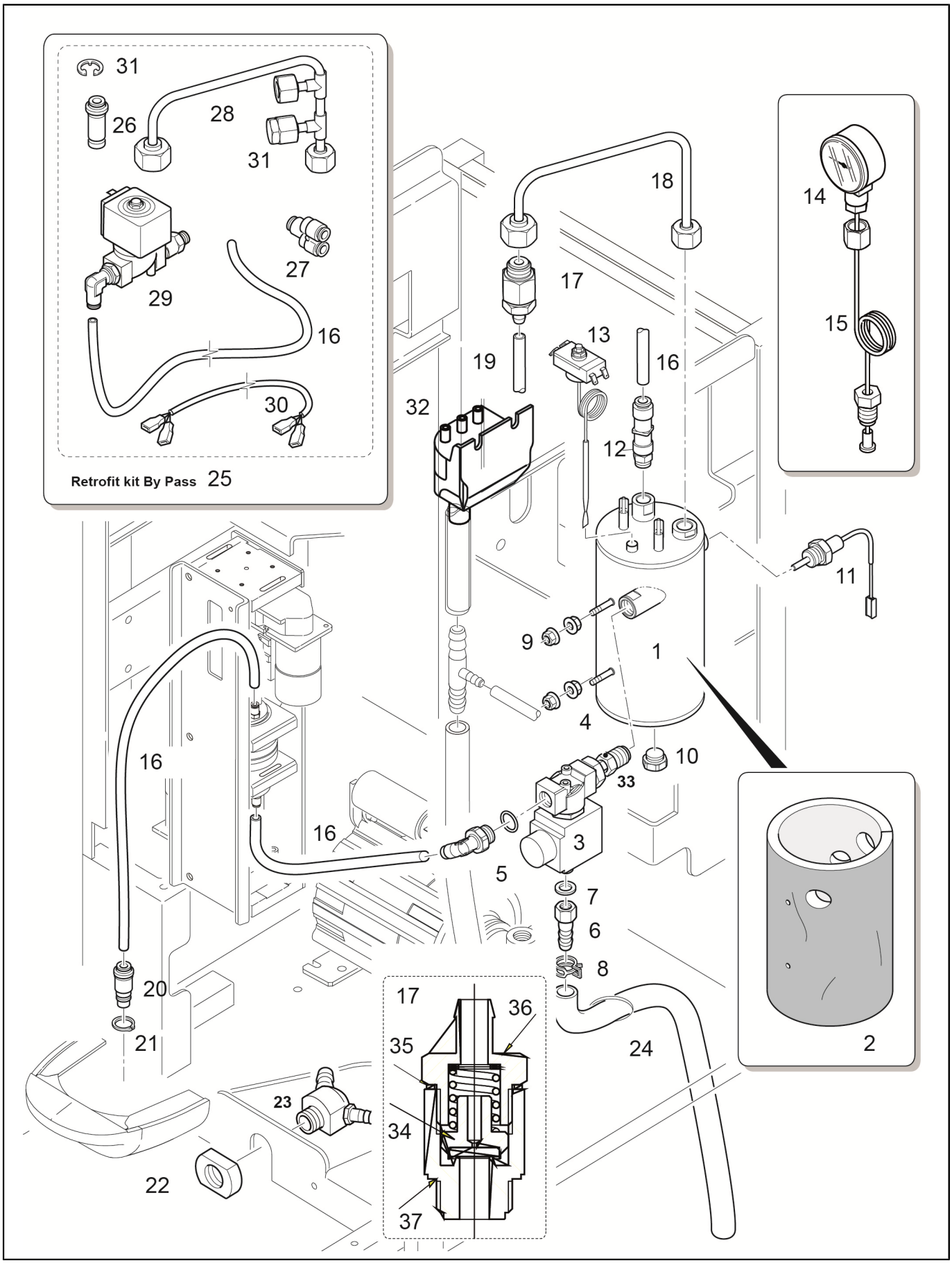
31
26
28
31
29
27
16
30
Retrofit kit By Pass 25
18
14
17
15
13
19
16
32
12
11
9
1
4
10
33
16
16
3
5
7
6
8
20
21
17
36
35
24
2
23
34
22
37

Pos.	Code	Description	Notes
1	10020002	Boiler 230V 2500W Dhe Assy.	
	10020038	Boiler 230V 2500W Coffee Incoloy 800	
	10020038	Boiler 230V 2500W Coffee Incoloy 800	
	10701094	Retrofit Kit Coffee Boiler 2,5Kw 0,5L Dhe	
2	69000415	Boiler Insulation	
3	00100147.001	Operator Kit 3/2 Way Water T30 (Acl)	to be used on machine before S/N 12011960 PIN 119415 da utilizzare su macchine precedenti la N/F 12011960 PIN 119415
	00100149.001	Plunger 3/2 Water T30 (Acl)	to be used on machine before S/N 12011960 PIN 119415 da utilizzare su macchine precedenti la N/F 12011960 PIN 119415
	10060607	Electrovalve Coffee Boiler	
	10060607	Electrovalve Coffee Boiler	
	34040178	Plunger 3/2 T30 (Sirai) Ml316	to be used on machine after S/N 12011960 PIN 119415 da utilizzare su macchine successive la N/F 12011960 PIN 119415
	34040181	Operator Kit 3/2 Ways T30 24V Sirai	to be used on machine after S/N 12011960 PIN 119415 da utilizzare su macchine successive la N/F 12011960 PIN 119415
	34040184	Valve 3/2 24V T30 (Sirai)	f
4	10042199	Pipe Valve-Boiler Coffee Zero	
5	69200142	Elbow Connector G1/4X4 Ppsu	
6	23000322	Rubber Holder Valve Coffee Zero-One	
7	27350014	Copper Gasket 12.5X9.8X1.5	
8	00055794	Wire Hose Clamp 159 Mm	
9	00001521	Keps Nut M5	
10	23000309	Plug With Ogive 1/8	
11	10110729	Extension Cable Temperature Sensor	
	10701642	Temperature Sensor With O-Ring	
12	69200173	Check Valve 4 X G1/8	replacement for ../ Ersatz für 69200143
13	32331780	Thermostat Fixing Bracket	
	34200323	High Limit Thermostat 140/15 220V	
14	35002509	Manometer Pumpe 0-16 D. 44	
	35002513	Manometer Pumpe 0-16	only used at black frame / nur verwendet bei scharzem Gehäuse
15	69000244	Pipe Pump Manometer	
16	38228072	Teflon Hose Fep D. 4,0 X 2,5	
17	10060009	Gasket Holder With Viton Gasket	
	10060479	Expansion Valve 8 X G 3/8	
	27350001	Gasket 3/8 X 1 Copper	
18	10042099	PIPE EXPANSION VALVE COFFEE BOILER	
19	00004474	Silicon Hose D. 8 X 5 Mm	
20	00100038.001	O-Ring 8,73 X 1,78 Mvq	
	10701020	Coffee Injector	
21	00100186.013	Snap Ring D. 13 Inox	
22	23000320	Nut Drain Connection	
23	20200251	Drain Connector One	
24	00004473	Silicon Hose D. 14 X 9 Mm	
25	10701148	Retrofit Kit Bypass With 2,5Kw Boiler	
26	00100043.001	O-Ring 6,75 X 1,78 Mvq	
	10701019	Central Injector/14	
27	69200187	Y Connector D.4 Ppsu	

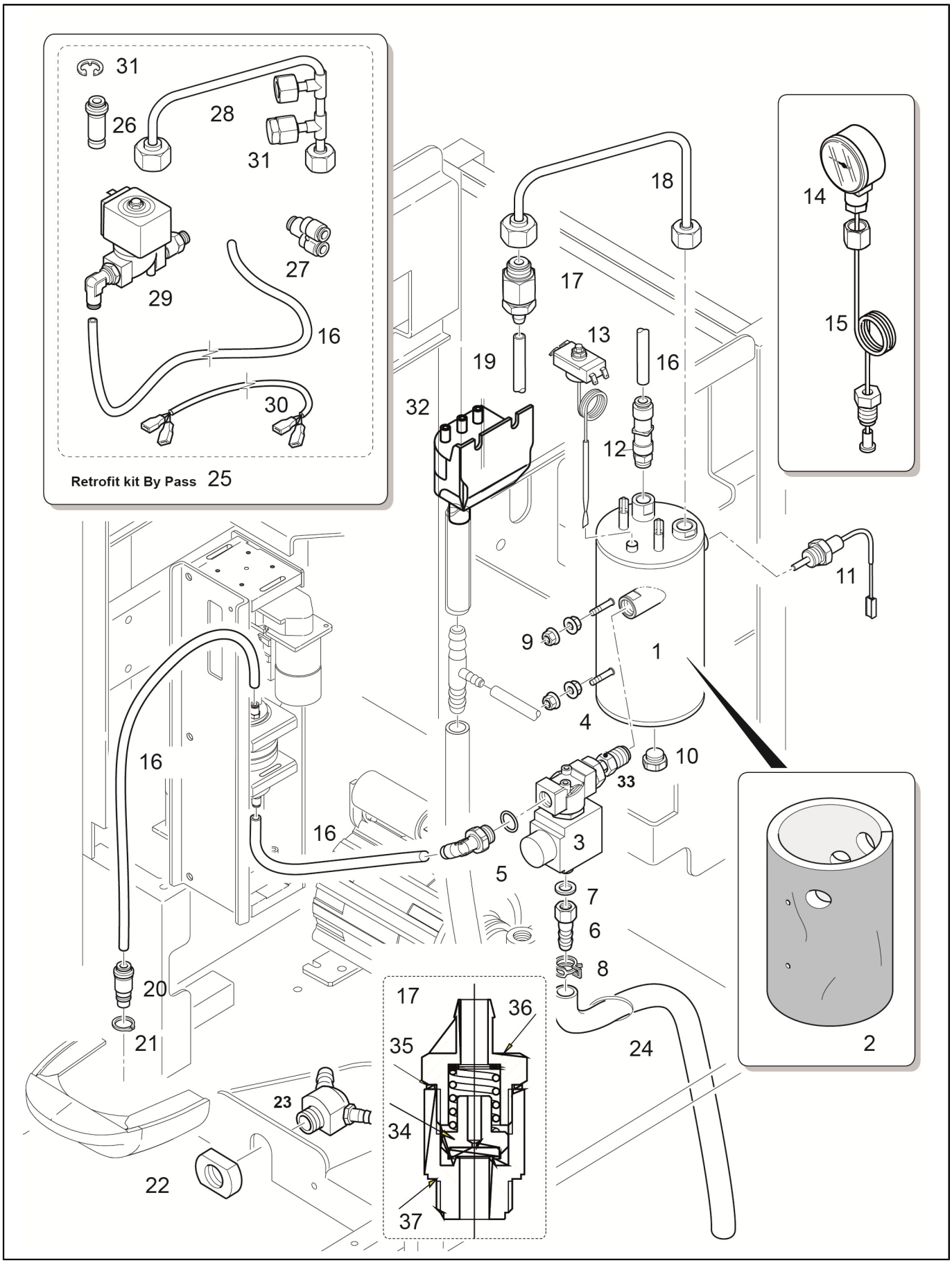
31
26
28
31
29
27
16
30
Retrofit kit By Pass 25
18
14
17
15
13
19
16
32
12
11
9
1
4
10
33
16
16
3
5
7
6
8
20
21
17
36
35
24
2
23
34
22
37

Pos.	Code	Description	Notes
28	10046062	Pipe Expansion Valve+Boiler Coffee	
29	00100559.001	Operator Kit 2/2 Way Water T30 (Acl)	to be used on machine before S/N 12011960 PIN 119415 da utilizzare su macchine precedenti la N/F 12011960 PIN 119415
	00100560.001	Plunger 2/2 Water T30 (Acl)	to be used on machine before S/N 12011960 PIN 119415 da utilizzare su macchine precedenti la N/F 12011960 PIN 119415
	10060606	Electrovalve Powder-Bypass	
	34040177	Plunger 2/2 T30 (Sirai) Ml316	
	34040183	Valve 2/2 24V T30 (Sirai)	
30	10110868	Wiring By-Pass Valve Sirai	
31	23000289	Closing Pin G1/4	
32	10700232	Valve Drain Tray	
33	10042199	Pipe Valve-Boiler Coffee Zero	
34	10060006	Nut And Steam Cock Gasket	
35	27350001	Gasket 3/8 X 1 Copper	
36	23220001	Rubber Holder	
37	23220014	L4 RUBBER-HOLDER	

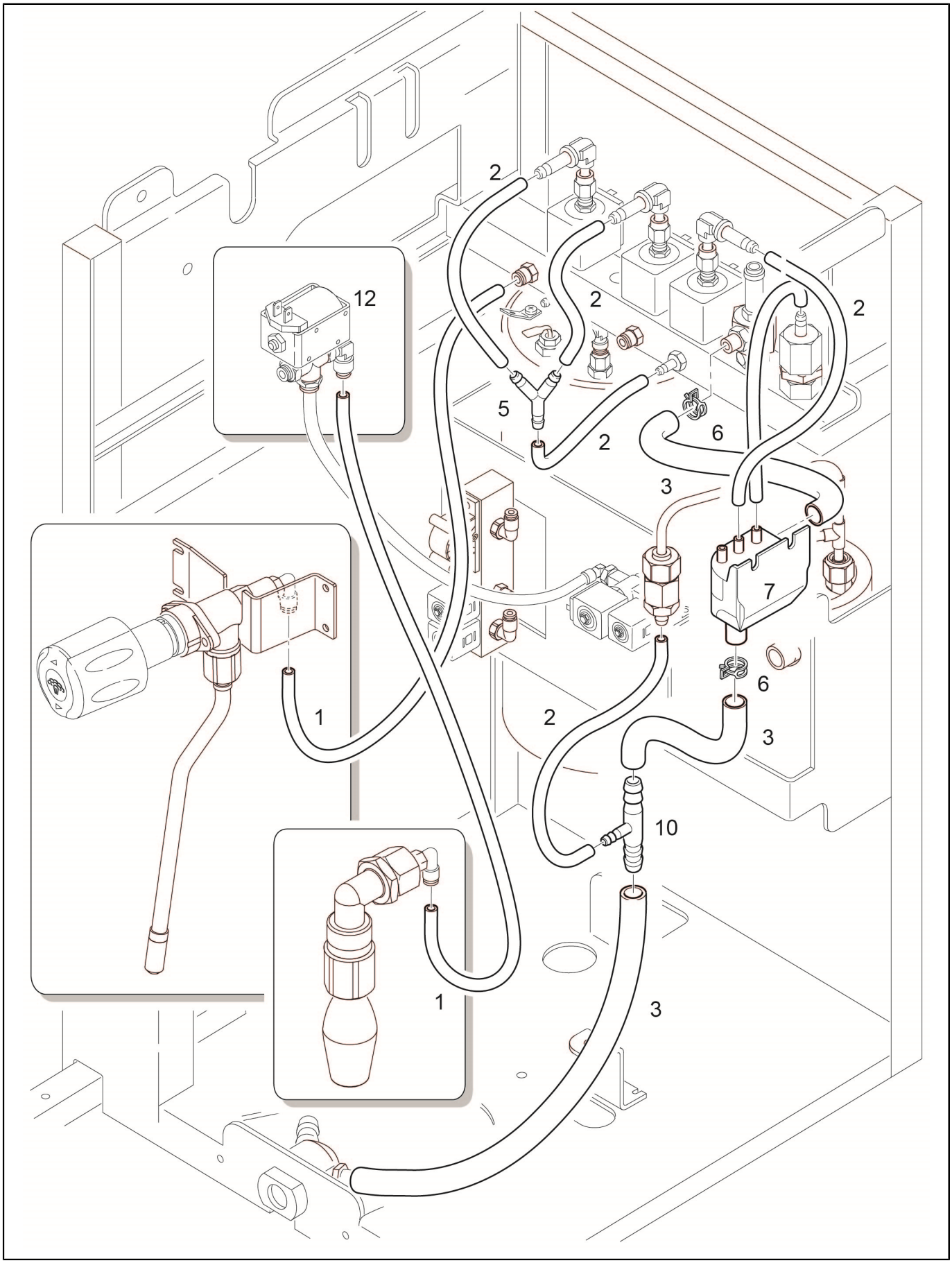
2
12
2
2
5
2
6
3
7
6
1
2
3
10
1
3

Pos.	Code	Description	Notes
1	38228073	Teflon Hose Fep D. 6 X 4	
2	00004474	Silicon Hose D. 8 X 5 Mm	
3	00004473 10700281	Silicon Hose D. 14 X 9 Mm Drain Pipe Kit	
5	69200162	Y Connection Silicon Pipe D.6	replacement for 69200118 / Ersatz für 69200118
6	00055795	Wire Hose Clamp 17,3 Mm	
7	10700232	Valve Drain Tray	
10	00045714	Reducing T Connector D. 12 - 6 - 12 Mm	
11	00045714 00100862.003	Reducing T Connector D. 12 - 6 - 12 Mm Drain Pipe Kit	
12	34040156	Valve 3/2 24V	

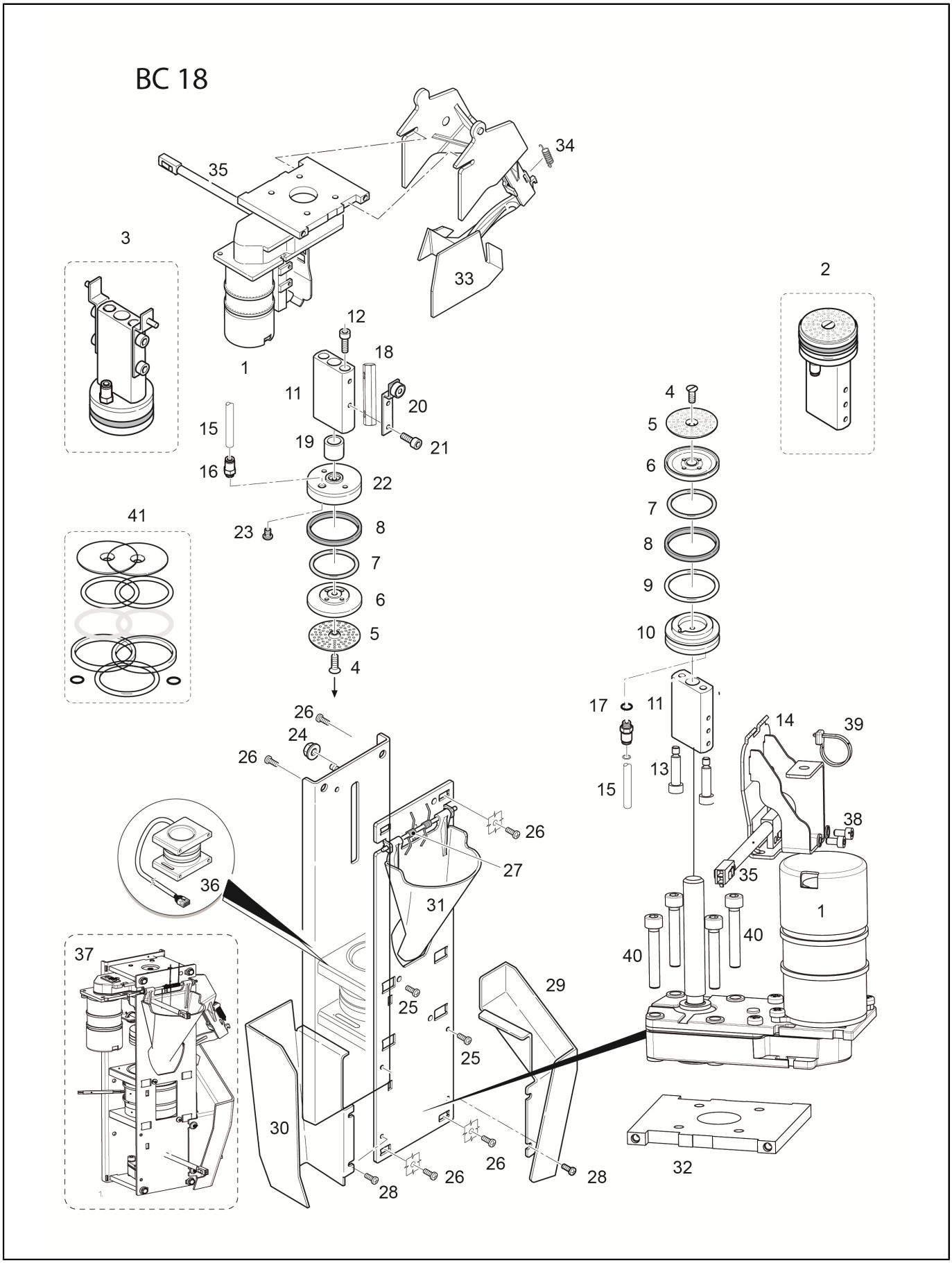
BC 18
35
34
3
33
2
12
18
1
11
20
4
15
19
21
5
6
16
22
7
41
23
8
8
7
9
6
10
5
4
17
11
26
14
39
24
26
13
15
38
26
27
35
36
31
1
40
40
37
29
25
25
30
26
26
28
28
32

2002_02 - Coffee Brewing Group (BC18) from S/N 12009467

Pos.	Code	Description	Notes
1	10701051	Spindle Motor With Sensor	for Egro ONE: S/N 12009467 PIN 108293
2	10700177	Lower Piston Bc18	
3	10700176	Upper Piston Bc18	
4	00001176	Countersunk Screw M4X12 Mm	
5	00060116	Brewing Sieve D. 44 Mm	
6	00054861	Filter Carrier	
7	00100136.001	O-Ring 31,35 X 3,53 Silicone 70Sh Red	
8	00039064	Turcon Ring 39 X 44 X 4	
9	00100506.001	O-Ring 36,09 X 3,53 Silicone 70Sh	
10	36930110	Lower Piston Gr. Bc18	
11	10701050	Piston Shaft With Magnet	piston shaft for BC18, ATTENTION to the magnet position. (could be used also on L61 or previous groups, put the magnet on the opposite side) albero pistone per BC18, ATTENZIONE alla posizione del magnete. (può essere utilizzato su gruppi L61 o precedenti posizionando al contrario il magnete)
12	00000930	Screw M4X20	
13	00048548	Hex Socket Head Screw For Peek Pistonm4 X 15 Mm	
14	32331498	Piston Guide Reed	
15	38228072	Teflon Hose Fep D. 4,0 X 2,5	
16	69200133	Straight Connector D.4 X M5	
17	00060283	O-Ring 4 X 1,2 F	
18	00045032	Nut	
19	30001048	Spacer Piston Guide	
20	32331443	Bracket Upper Piston	
21	00000928	Hex Socket Head Screw M4 X10 Mm	
22	36930111	Upper Piston Group Bc18	
23	00048550	Flow Limiter D. 0.7	
24	00001521	Keps Nut M5	
25	37155011	Screw Atf Pt 4X10 Tcb Ph Inox	
26	37040409	Screw M4 X 8 Te	
27	00060858	Transmission Assay.	
28	00046844	Screw M4 X 8 Mm	
29	38120120	Spindle Motor Protection	
30	00048747 38120119	Grounds Slide Grounds Slider	Fit for all generation brewing unit (L61/ BC18)/ passt für alle Generationen von Brühgruppen (L61/BC18) does not fit for Automatic spout - use metal version 00048747 / passt nicht für Automatischen Auslauf - Metall Ausführung verwenden 00048747
31	38120115	Coffee Powder Funnel	
32	24300010	Spindle Motor Plate	
33	10700178	Ejector Brewing Group	
34	39110026	Spring Ejector	
35	34020125	End Switch Spindle Motor	
36	10701036	Brewing Chamber Bc18	
37	10054002	Brewing Group Bc18	
38	37060306 37420300	Screw M3 X 6 Tcei Elastic Washer 3 X 0,8	
39	34200071	Fixing Cable Clamp	
40	00000935	Hex Socket Head Screw M5 X 30 Mm	

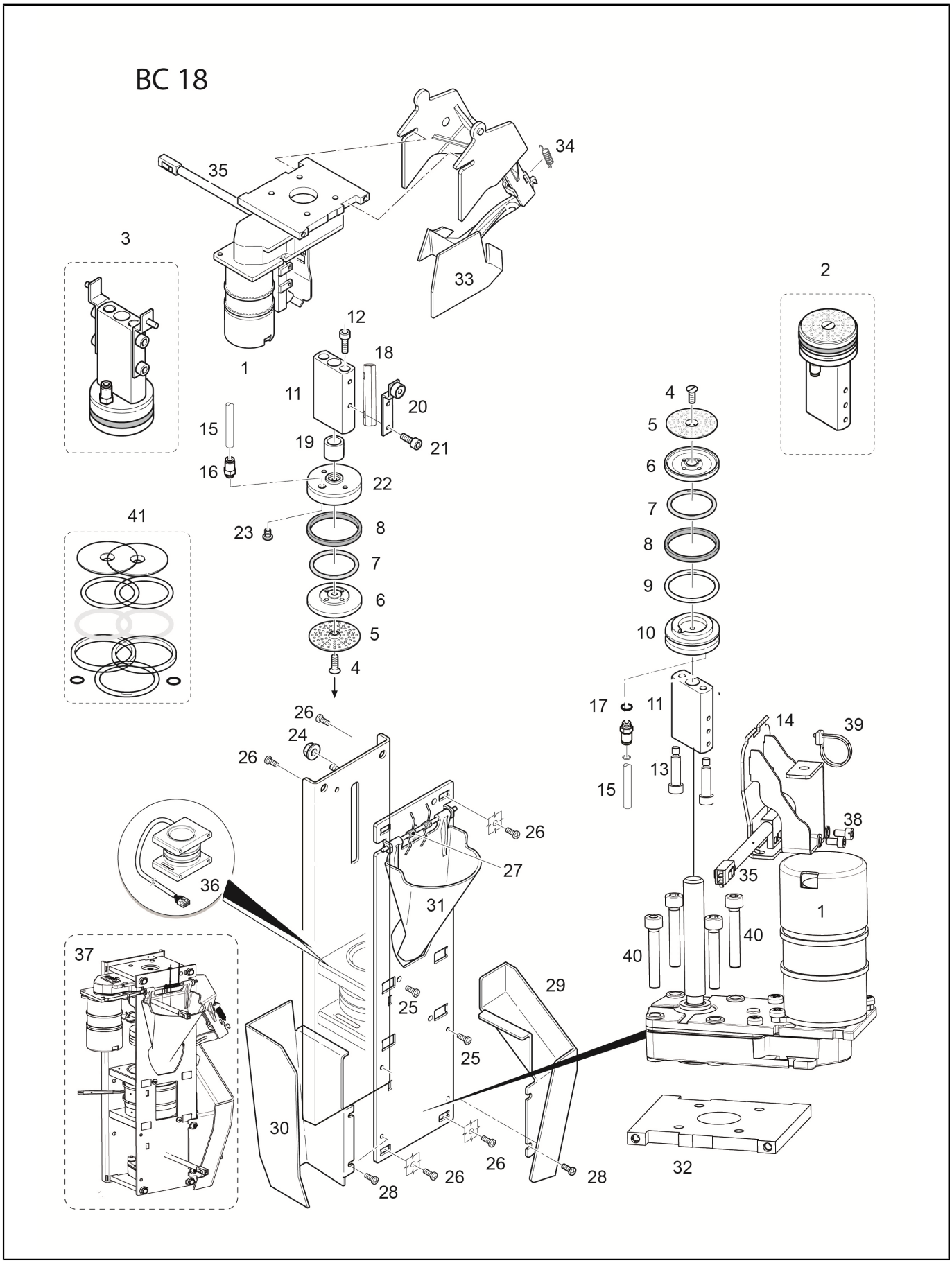
BC 18
35
34
3
33
2
12
18
1
11
20
4
15
19
21
5
6
16
22
7
41
23
8
8
7
9
6
10
5
4
17
11
26
14
39
24
26
13
15
38
26
27
35
36
31
1
40
40
37
29
25
25
30
26
26
28
28
32

Pos.	Code	Description	Notes
	37040409	Screw M4 X 8 Te	
41	00057446	Gasket Kit Brewing Group Bc18	

EGRO
BUILT FOR EXCELLENCE

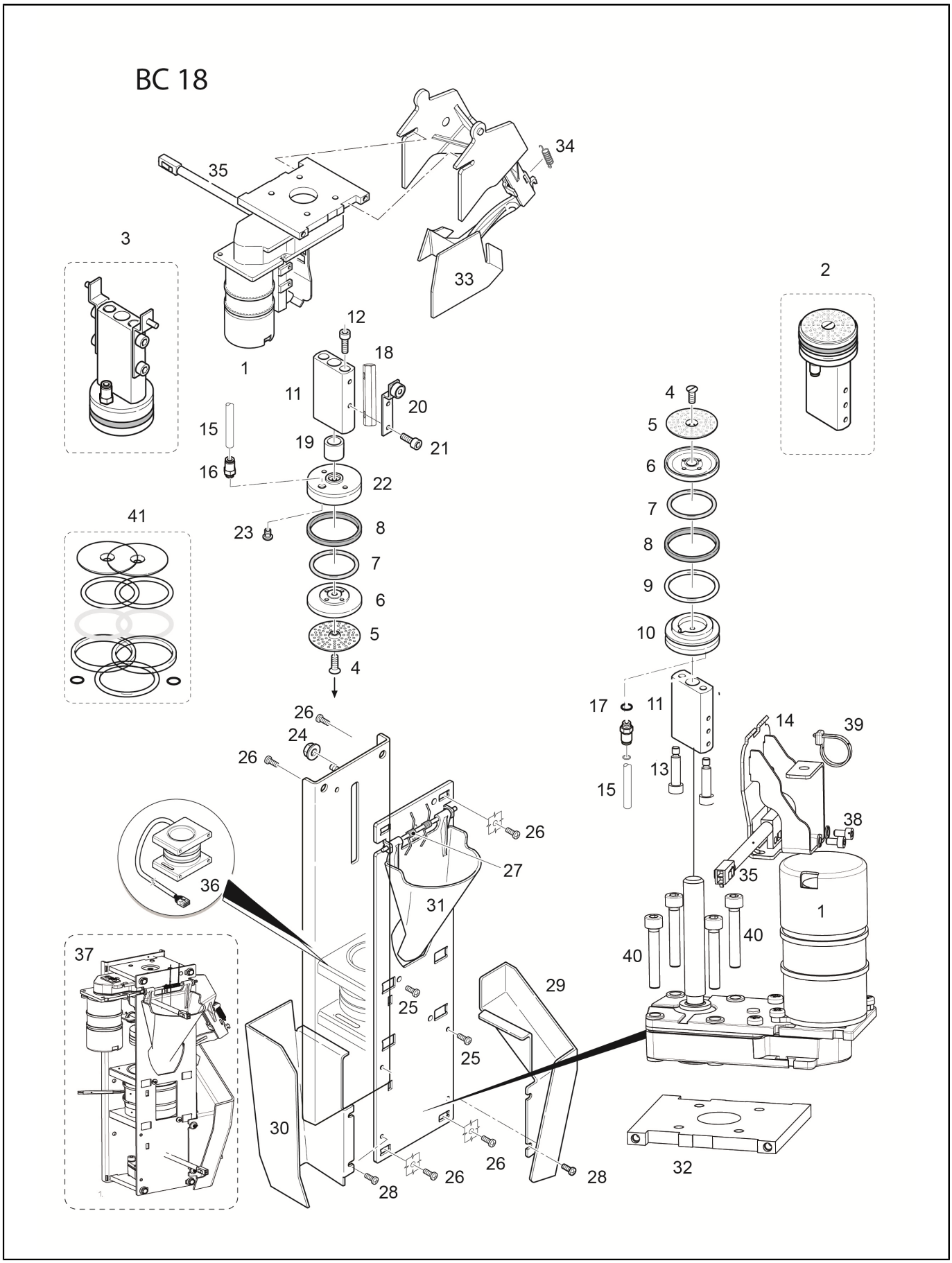

Pos.	Code	Description	Notes
1	10701051	Spindle Motor With Sensor	for Egro ONE: S/N 12009467 PIN 108293
2	10700177	Lower Piston Bc18	
3	10700176	Upper Piston Bc18	
4	00001176	Countersunk Screw M4X12 Mm	
5	00060116	Brewing Sieve D. 44 Mm	
6	00054861	Filter Carrier	
7	00100136.001	O-Ring 31,35 X 3,53 Silicone 70Sh Red	
8	00039064	Turcon Ring 39 X 44 X 4	
9	00100506.001	O-Ring 36,09 X 3,53 Silicone 70Sh	
10	36930110	Lower Piston Gr. Bc18	
11	10701050	Piston Shaft With Magnet	piston shaft for BC18, ATTENTION to the magnet position. (could be used also on L61 or previous groups, put the magnet on the opposite side) albero pistone per BC18, ATTENZIONE alla posizione del magnete. (può essere utilizzato su gruppi L61 o precedenti posizionando al contrario il magnete)
12	00000930	Screw M4X20	
13	00048548	Hex Socket Head Screw For Peek Pistonm4 X 15 Mm	
14	32331498	Piston Guide Reed	
15	38228072	Teflon Hose Fep D. 4,0 X 2,5	
16	69200133	Straight Connector D.4 X M5	
17	00060283	O-Ring 4 X 1,2 F	
18	00045032	Nut	
19	30001048	Spacer Piston Guide	
20	32331443	Bracket Upper Piston	
21	00000928	Hex Socket Head Screw M4 X10 Mm	
22	36930111	Upper Piston Group Bc18	
23	00048550	Flow Limiter D. 0.7	
24	00001521	Keps Nut M5	
25	37155011	Screw Atf Pt 4X10 Tcb Ph Inox	
26	37040409	Screw M4 X 8 Te	
27	00060858	Transmission Assay.	
28	00046844	Screw M4 X 8 Mm	
29	38120120	Spindle Motor Protection	
30	00048747 38120119	Grounds Slide Grounds Slider	Fit for all generation brewing unit (L61/ BC18)/ passt für alle Generationen von Brühgruppen (L61/BC18) does not fit for Automatic spout - use metal version 00048747 / passt nicht für Automatischen Auslauf - Metall Ausführung verwenden 00048747
31	38120115	Coffee Powder Funnel	
32	38120348		
33	10700193	Ejector Brewing Group bc18/22	
34	39110026	Spring Ejector	
35	34020125	End Switch Spindle Motor	
36	10701036	Brewing Chamber Bc18	
37	10054002	Brewing Group Bc18	
38	37060306 37420300	Screw M3 X 6 Tcei Elastic Washer 3 X 0,8	
39	34200071	Fixing Cable Clamp	
40	00000935	Hex Socket Head Screw M5 X 30 Mm	

EGRO
BUILT FOR EXCELLENCE

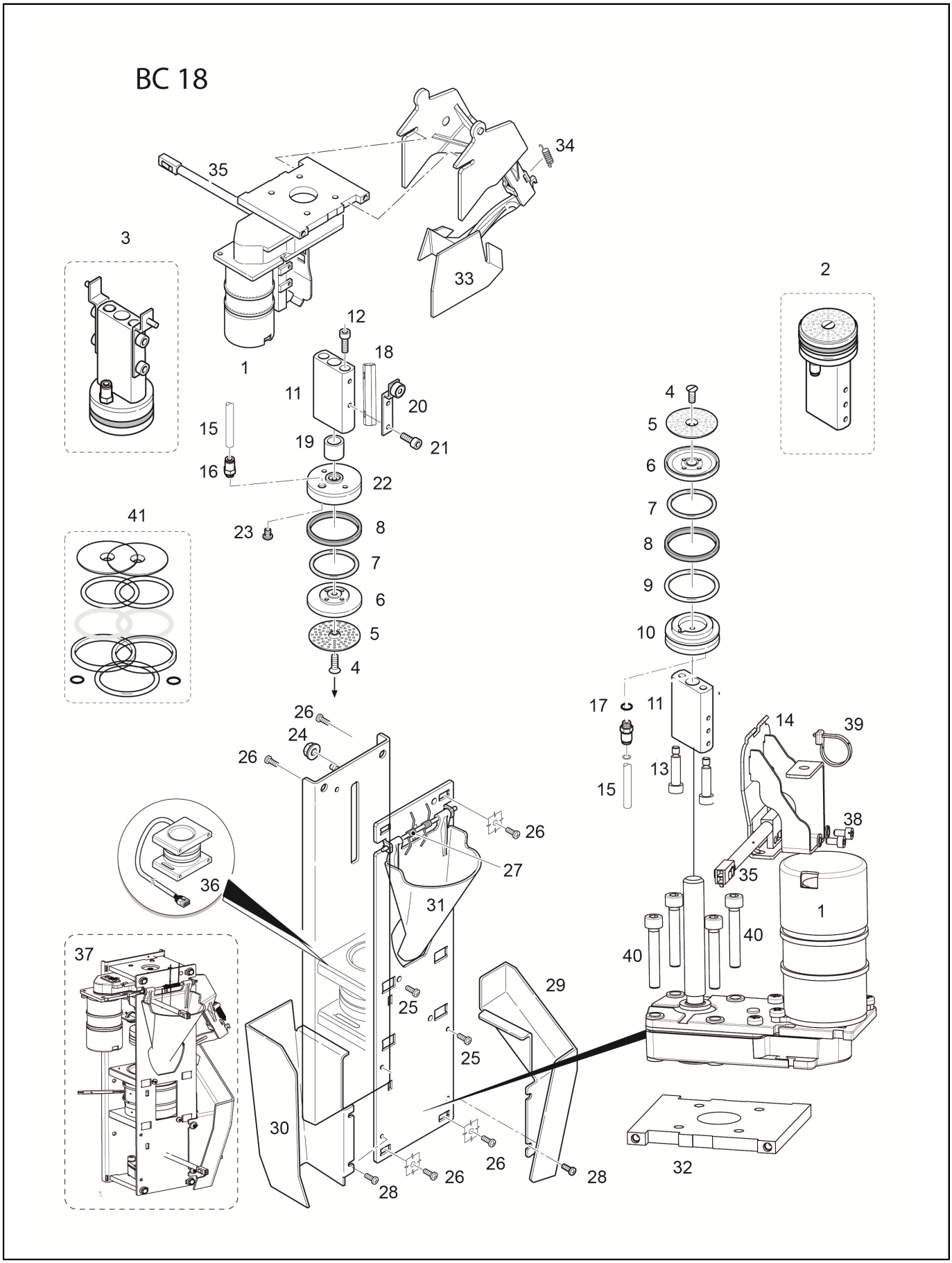

Pos.	Code	Description	Notes
	37040409	Screw M4 X 8 Te	
41	00057446	Gasket Kit Brewing Group Bc18	

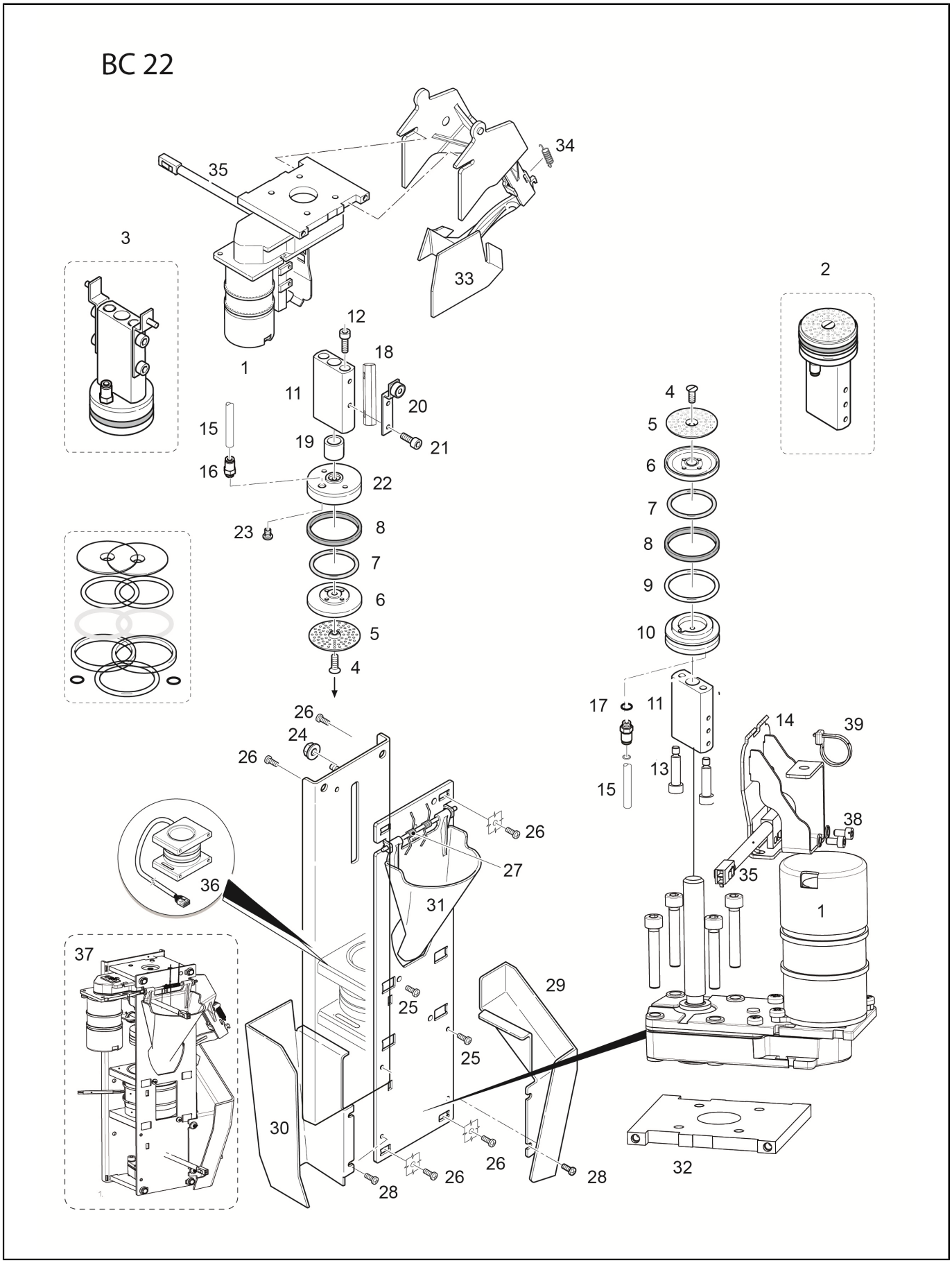
BC 22
35
34
3
33
2
12
18
1
11
20
4
15
19
21
5
6
16
22
7
23
8
8
7
9
6
10
5
4
17
11
26
14
39
24
26
13
15
38
26
27
35
36
31
1
37
29
25
25
30
26
26
28
28
32

Pos.	Code	Description	Notes
1	101000009	GEAR MOTOR UPPER+PLATE+SENS. BC18 NEXT	
	101000037	GEAR MOTOR NO PIN LOWER+PLATE+SENSOR BC18 NEXT	
2	10701008	Lower Piston Bc22	
3	10701007	Upper Piston Assy. Bc22	
4	00001176	Countersunk Screw M4X12 Mm	
5	40200013	Shower Brewing Unit Egro 46Mm	
6	36930022	Filter Holder 50 Peek	
7	36404024	Oring 37,69X3,53 80Sh	
8	36201037	Turcon Ring 39 X 50 X 4	
9	36404066	Oring 42,86X3,53 80Sh	
10	36930117	Lower Piston Bc22	
11	10701050	Piston Shaft With Magnet	
12	00000930	Screw M4X20	
13	00048548	Hex Socket Head Screw For Peek Pistonm4 X 15 Mm	
14	32331498	Piston Guide Reed	
15	38228072	Teflon Hose Fep D. 4,0 X 2,5	
16	69200133	Straight Connector D.4 X M5	
17	00060283	O-Ring 4 X 1,2 F	
18	00045032	Nut	
19	30001048	Spacer Piston Guide	
20	32331443	Bracket Upper Piston	
21	00000928	Hex Socket Head Screw M4 X10 Mm	
22	36930118	Upper Piston Bc22	
23	00048550	Flow Limiter D. 0.7	
24	00001521	Keps Nut M5	
25	37155011	Screw Atf Pt 4X10 Tcb Ph Inox	
26	37040409	Screw M4 X 8 Te	
27	00060858	Transmission Assay.	
28	00046844	Screw M4 X 8 Mm	
29	38120120	Spindle Motor Protection	
30	38120119	Grounds Slider	
31	38120462	Coffee Powder funnel BC18/22 2023	
32	24300014	Spindle Motor Bracket for Cylindric Pin	
33	10700178	Ejector Brewing Group	
34	39110026	Spring Ejector	
35	34020125	End Switch Spindle Motor	
36	10701904	Brewing Chamber BC22	
37	10054010	BC22 Brewing Unit	
38	37060306	Screw M3 X 6 Tcei	
	37420300	Elastic Washer 3 X 0,8	
39	34200071	Fixing Cable Clamp	
40	00000935	Hex Socket Head Screw M5 X 30 Mm	

EGRO
BUILT FOR EXCELLENCE

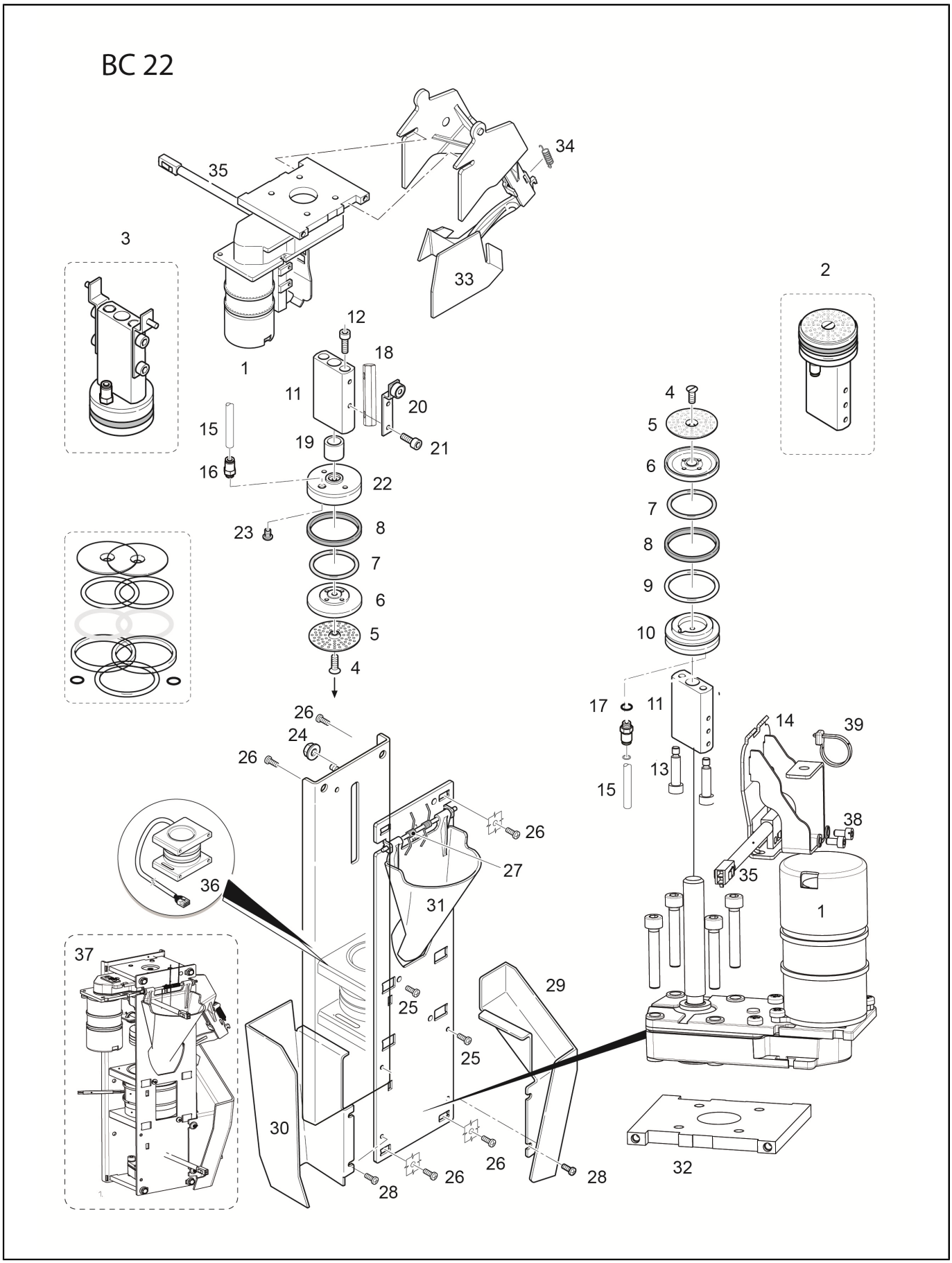

Pos.	Code	Description	Notes
1	10701051	Spindle Motor With Sensor	
2	10701008	Lower Piston Bc22	
3	10701007	Upper Piston Assy. Bc22	
4	00001176	Countersunk Screw M4X12 Mm	
5	40200013	Shower Brewing Unit Egro 46Mm	
6	36930022	Filter Holder 50 Peek	
7	36404024	Oring 37,69X3,53 80Sh	
8	36201037	Turcon Ring 39 X 50 X 4	
9	36404066	Oring 42,86X3,53 80Sh	
10	36930117	Lower Piston Bc22	
11	10701050	Piston Shaft With Magnet	
12	00000930	Screw M4X20	
13	00048548	Hex Socket Head Screw For Peek Pistonm4 X 15 Mm	
14	32331498	Piston Guide Reed	
15	38228072	Teflon Hose Fep D. 4,0 X 2,5	
16	69200133	Straight Connector D.4 X M5	
17	00060283	O-Ring 4 X 1,2 F	
18	00045032	Nut	
19	30001048	Spacer Piston Guide	
20	32331443	Bracket Upper Piston	
21	00000928	Hex Socket Head Screw M4 X10 Mm	
22	36930118	Upper Piston Bc22	
23	00048550	Flow Limiter D. 0.7	
24	00001521	Keps Nut M5	
25	37155011	Screw Atf Pt 4X10 Tcb Ph Inox	
26	37040409	Screw M4 X 8 Te	
27	00060858	Transmission Assay.	
28	00046844	Screw M4 X 8 Mm	
29	38120120	Spindle Motor Protection	
30	38120119	Grounds Slider	
31	38120462	Coffee Powder funnel BC18/22 2023	
32	24300014	Spindle Motor Bracket for Cylindric Pin	
33	10700193	Ejector Brewing Group bc18/22	
34	39110026	Spring Ejector	
35	34020125	End Switch Spindle Motor	
36	10701904	Brewing Chamber BC22	
37	10054010	BC22 Brewing Unit	
38	37060306	Screw M3 X 6 Tcei	
	37420300	Elastic Washer 3 X 0,8	
39	34200071	Fixing Cable Clamp	
40	00000935	Hex Socket Head Screw M5 X 30 Mm	
41	10701591	Kit Group Gasket Bc22	

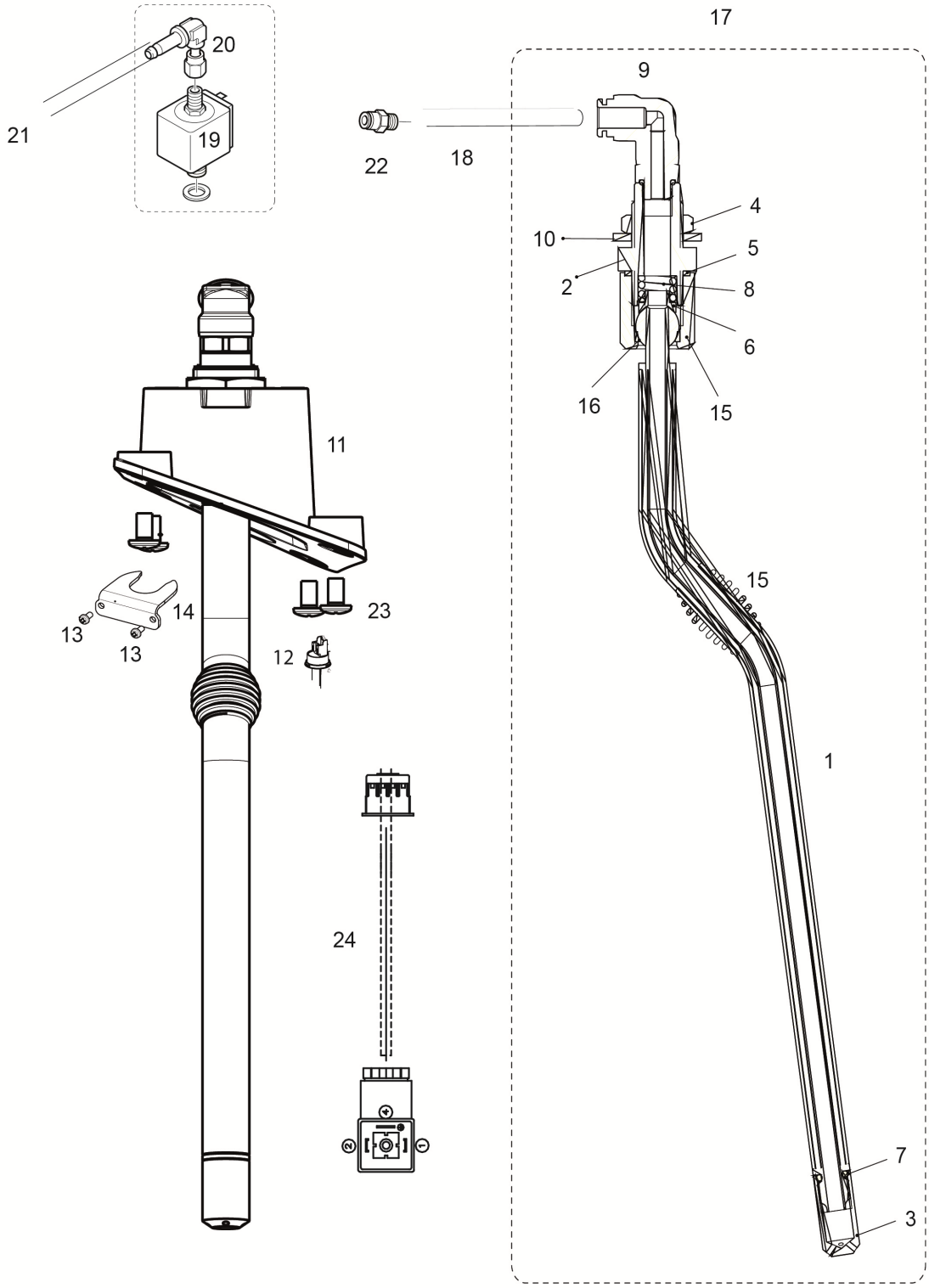
17
9
20
21
19
22
18
4
10
5
2
8
6
16
15
11
15
14
23
13
13
12
1
24
7
3

Pos.	Code	Description	Notes
1	10049133	Cool Touch Wand Assy. Next	
2	23000332	Right Water Wand Connection One As	
3	25111006	Steam Nozzle	
4	26220005	Flat Nut 3/8	
5	36220009	Gasket Nut Note Teflon	
6	36930016	Gasket Teflon Connection Steam Wand	
7	36404022	O-RING 6,4 X 1,9 R5A	
8	39110038	Spring Connection Steam Tap	
9	69200140	Elbow Connector6 X G1/8 Ppsu	
10	37431600	Outer Toothed Washer D16	
11	38120344	Closing Cap Cool Touch Wand	
12	10701434	Led Cup Light	
13	00001062	Raised Cheese Head Screw M3 X 6 Mm	
14	32331613	Bracket Isteam-Tea Next	
15	23000339	Nut Connection Wand Inox	
16	36930017	Teflon Gasket For Steam Wand Nut	
17	10701424	Steam Wand	
18	38228073	Teflon Hose Fep D. 6 X 4	
19	00100013.001	O-Ring 17,17 X 1,78 F	
20	00057912	Threaded Elbow, Maled. 6 Mm X G1/8	
21	00004474	Silicon Hose D. 8 X 5 Mm	
22	69200135	Straight Connector G1/8 X 6	
23	00001074	Crossed Raised Cheese Head Screw M4 X 10 Mm	
24	10120021	Wiring Solenoid Steam Next	

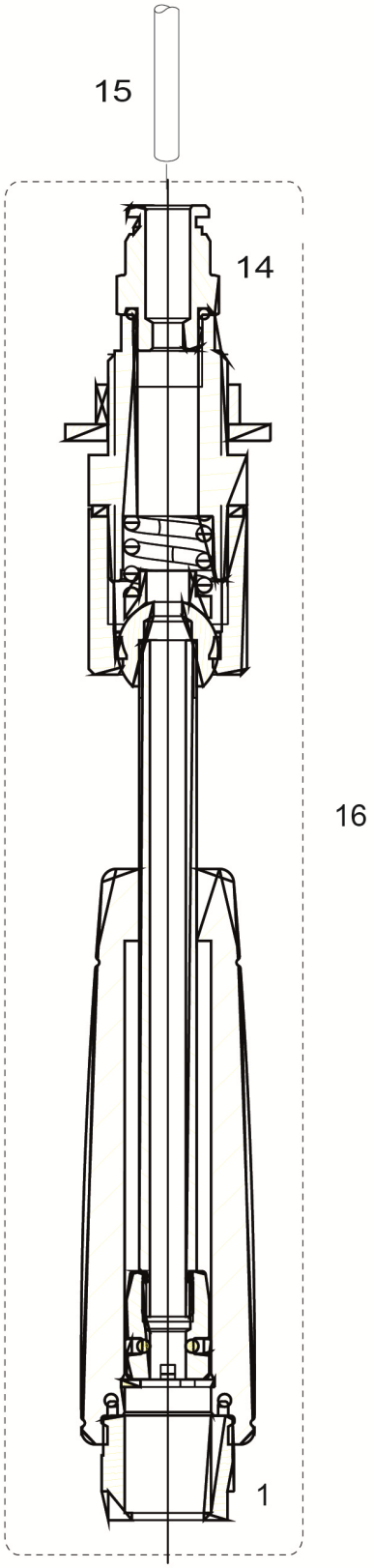
15
14
16
1

14
13
12
11
10
9
8
7
6
5
4
3
2
1

Pos.	Code	Description	Notes
1	00005295	Mixing Nozzle G3/8 Neoperl	
2	00002240	O-Ring 14 X 1,78 Epdm 70Sh	
3	37510201		
4	26220005	Flat Nut 3/8	
5	36201038	Turcon Ring D.12/7.1.2 Mf3	
6	36404068	O-Ring D6.7X1.8 Epdm Fda 70Sh Black	
7	23000400	Adjustable Water Wand Nut	
8	00002195	O-Ring 5 X 1 Epdm 70Sh	
9	30001055	Adjustable wand pipe Next	
10	23000339	Nut Connection Wand Inox	
11	36220009	Gasket Nut Note Teflon	
12	36930017	Teflon Gasket For Steam Wand Nut	
13	36930016	Gasket Teflon Connection Steam Wand	
14	69200135	Straight Connector G1/8 X 6	
15	38228073	Teflon Hose Fep D. 6 X 4	
16	10701430	Hot Water Wand	

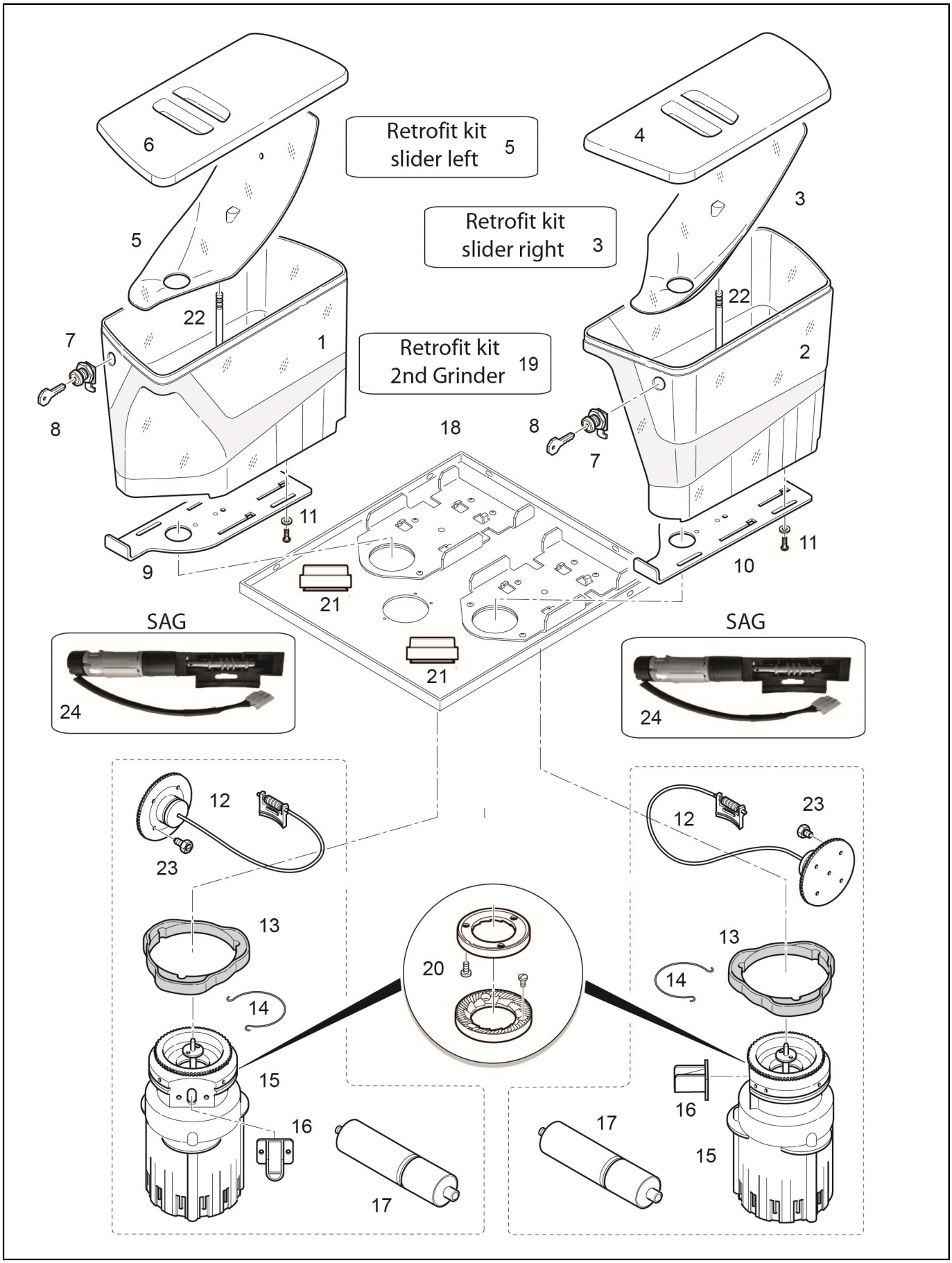
Retrofit kit slider left 5
Retrofit kit slider right 3
Retrofit kit 2nd Grinder 19
SAG
SAG
1
2
3
4
5
6
7
8
9
10
11
12
13
14
15
16
17
18
19
20
21
22
23
24

Pos.	Code	Description	Notes
1	00100878.001	Bean Hopper Assay. Left Without Lock	
	00100878.002	Bean Hopper Assay. Left With Lock	
2	00100877.001	Bean Hopper Assay. Right Without Lock	
	00100877.002	Bean Hopper Assay. Right With Lock	
3	38120580	Slider Bean Hopper Right One/15	
4	38120075	Lid For Bean Hopper Right	
5	38120581	Slider Bean Hopper Left One/15	
6	38120076	Lid For Bean Hopper Left	
7	10705529	Lock Assay. Ronis M15X17,5 With Hook 25.5Mm	
	69000337	Lock 90 M15 X 17,5	
8	69000339	Serial Key Cod 200C	
9	32331404	Slider Beans Hopper Left	
10	32331403	Slider Beans Hopper Right	
11	37113508	Selfscrew M3X8	
	37410300	Plane Washer D3.2X9	
12	10701209	Grinder Adjustment Right/15	
	10701210	Grinder Adjustment Left/15	
	10705715	Grinder Adjustement Left (Welded Frame)	
	10705716	Grinder Adjustment Right (Welded Frame)	
13	36990026	Rubber Silent Block One	
14	00101048.001	Stop Spring	
15	10705713	Grinder Assay. 220V - 50/60Hz Right	
	10705714	Grinder Assay. 220V - 50/60Hz Left	
16	00100565.001	Powder Spout(Standard)	
17	00101070.001	Capacitor 14 Mf 400Vac P2 Ul	
	34020034	Capacitor 12,5Mf 450V Ul	
18	10705706	Top Lid 2 Grinders	
	10705717	Top Lid 1 Grinder	
19	00101000.001	Retrofit Kit 2Nd Grinder	
20	00046933	Grinder Plates, Pair D. 54Mm With Screw	
21	36990025	Seal (Collar) / Grinder	
22	23000128	Pin Bean Hopper One Self	
23	69200073	Blocking Srewm8	
24	34010015A	Motor 24V Sag With Encoder	

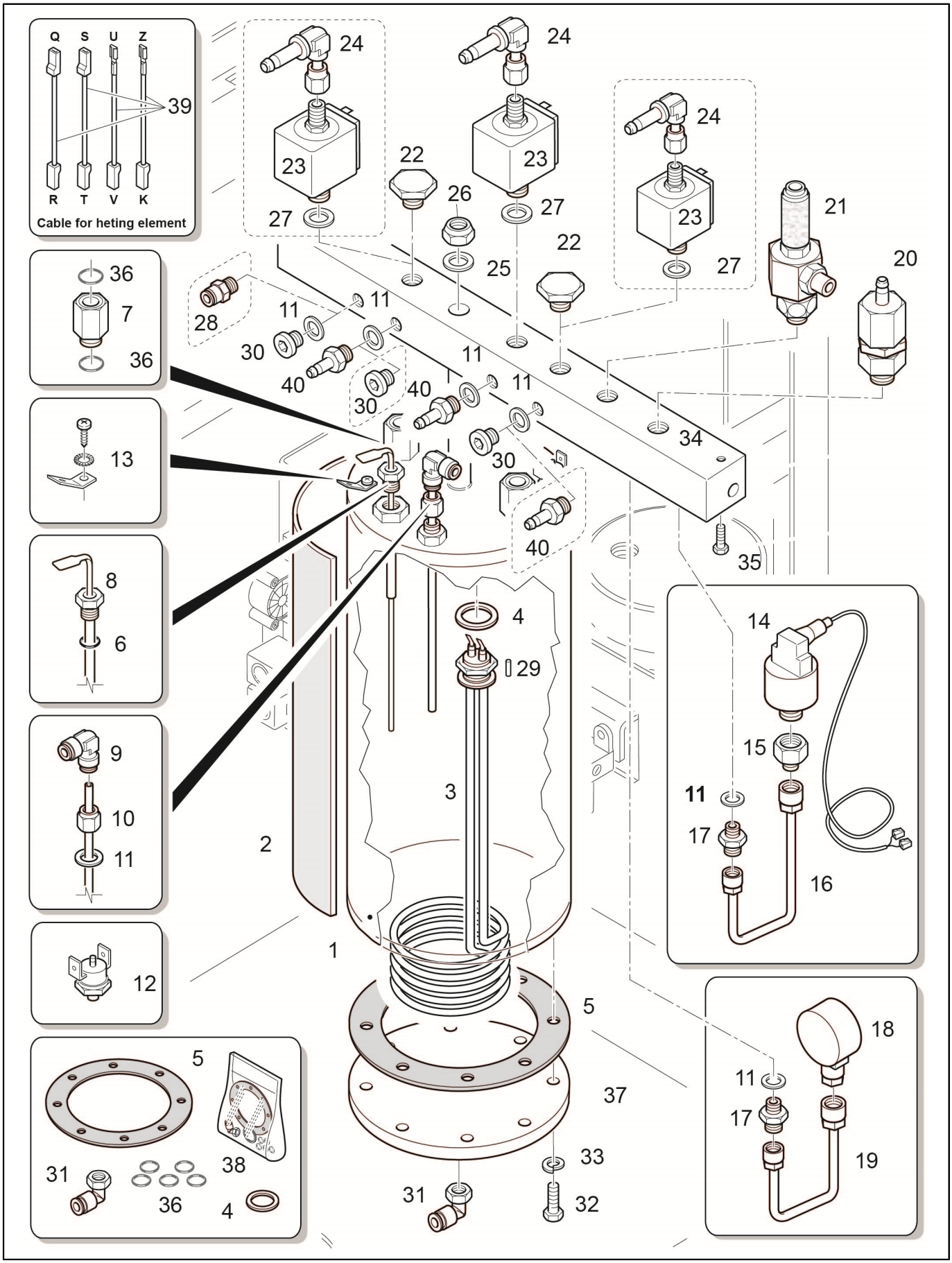
Q S U Z
R T V K
Cable for heting element
39
24
23
27
22
26
25
21
20
36
7
28
11
30
40
34
35
13
8
6
9
10
4
29
3
2
1
14
15
16
17
12
5
37
18
19
31
38
33
32

2006 - Steam Boiler - steam valve block XP/QM

Pos.	Code	Description	Notes
1	00100802.001	Steam Boiler Assy. 3 Kw	FOR ALL OVER THE WORLD EXCEPT FOR SINGAPORE MARKET
	10020018	Steam Boiler Assy. 2,5Kw	ONLY FOR SINGAPORE VERSION
	10701374	Steam Boiler Assy. One 3Kw	
2	36901955	Sticky Tape 3M 50Mmx55Mt	
	69000417	Boiler Insulation Steam Boiler	
3	10701173	HEATING ELEMENT WITH GASKET 2500W/230V ONE	ONLY FOR SINGAPORE VERSION
	10701254	Heating Element/15 230V/3Kw+Gasket One-S50	FOR ALL OVER THE WORLD EXCEPT FOR SINGAPORE
4	36201035	Gasket Steam Boiler Resistance Garlock Egro One	
5	00100351.001	Gasket Steam Boiler	
6	00002240	O-Ring 14 X 1,78 Epdm 70Sh	
7	00100267.001	Steam Connection	
8	00100268.002	Level Sensor 140 Mm With Gasketg1/4	
9	00100793.001	Elbow Connector 6 X 6 Mm	
10	30001047	Suction Pipe	
11	27350014	Copper Gasket 12.5X9.8X1.5	
12	00100300.001	Temperature Limiter 140 C	
13	34160024	Lamellar Contact	
	37030408	Screw M 4 X 8	
	37430400	Toothed Washer D4	
14	10120004	Cable Pressure Probe	
	34200288	Pressure Sensor	
15	00100869.001	Adapter Nipple D. G 1/4 X 3/8	
16	10705232	Pipe For Pressure Transducer	
17	00100059.001	Double Nipple G 1/4 X G 1/4	
18	00100236.001	Manometer 4 Bar	
19	10705233	Pipe For Manometer	
20	00044464	Gasket 16,5 X 13,2 X 1,5 Copper	
	10060060	Vacuum Valve	
	36130008	Seat Teflon Nsf	
	36220009	Gasket Nut Note Teflon	
	36404013	O-Ring Silicone 2031	
	36404053	O-Ring 5,28 X 1,78 Epdm	
21	00010152	Threaded Nipple	
	00019974	Gasket 14,8 X 9 X 2 Copper	
	00027170	Union Nut G3/8 X 13,5Mm	
	00039067	Relief Valve, Steam	
	00045682	Splash Guard-Hose D. 16,0 X 45,0	
22	00060160	Brass Closing Screw	
23	00100016.005	Plunger 3/2 Steam T30 (Acl)	
	00100116.005	Operator Kit 3/2 Ways Steam (Acl) T30	
24	00057912	Threaded Elbow, Maled. 6 Mm X G1/8	
25	37411001	Plane Washer D.10	
26	00001484	Nut M10	
27	00100013.001	O-Ring 17,17 X 1,78 F	
28	69200135	Straight Connector G1/8 X 6	
29	00056751	Guinding Pin D.8X8	
30	23000299	Cap G1/8 Boiler One/Zero	
31	69200141	Elbow Connector G1/4X6 Ppsu	
32	37040621	Screw M 6 X 20 Inox	
33	37420601	Elastic Washer D. 6	
34	00100825.001	Steam Valve Block Assay.	
35	37040510	Screwm5 X 10Mm	

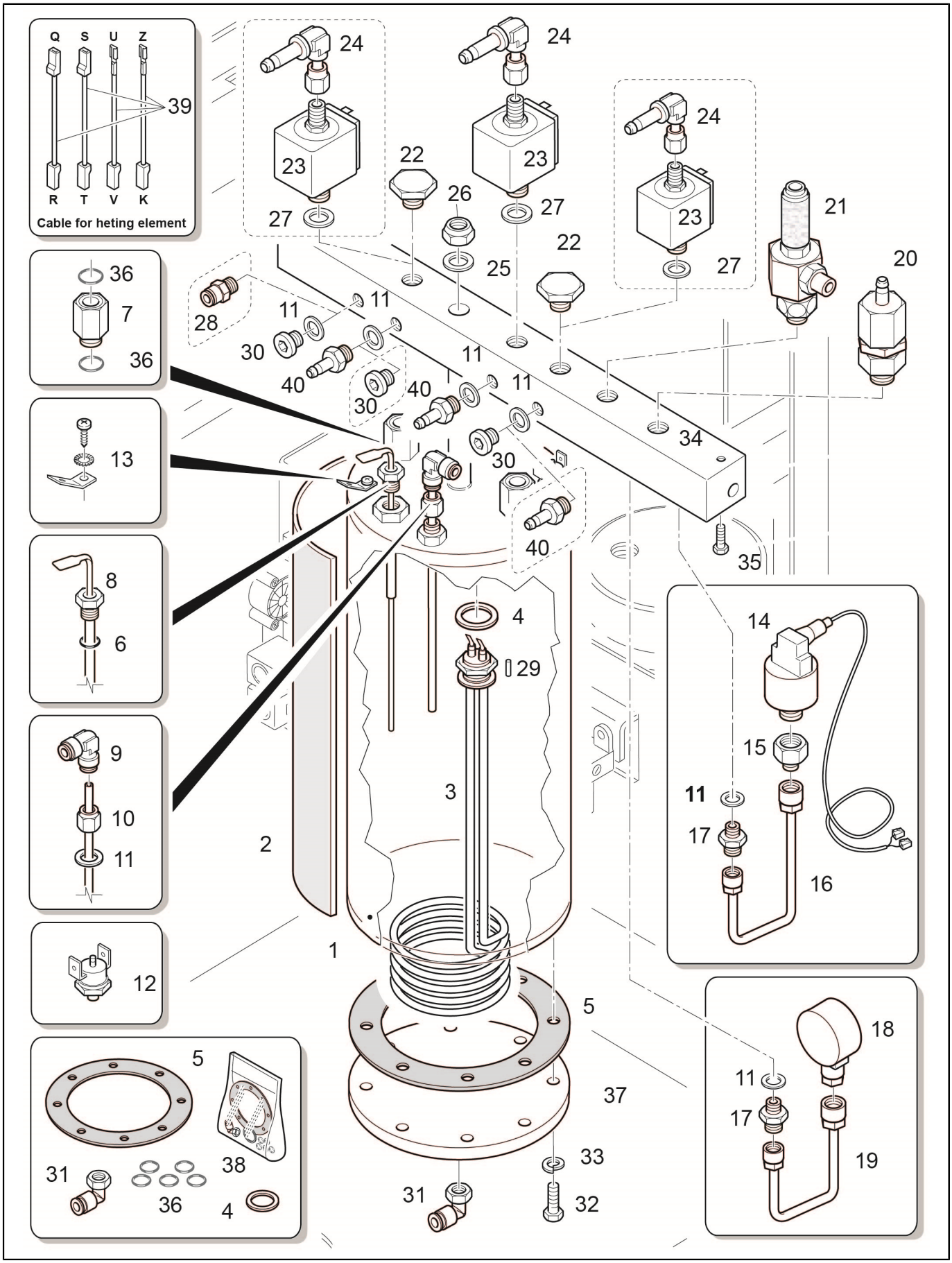
Q S U Z
R T V K
Cable for heting element
39
24
23
27
22
26
25
21
20
36
7
28
11
30
40
34
35
13
8
6
9
10
4
29
3
2
1
14
15
16
17
18
19
5
37
33
32
31
38

Pos.	Code	Description	Notes
36	36404054	O-Ring 12,42 X 1,78 V 70Sh 2050	
37	23000194	Plate Steam Boiler 100 X 1/4	
38	10700998	Service Kit Steam Boiler	
39	10110008	Kit Egro Boiler Wiring	
40	00049966	Threaded Male Nipple With Washer G 1/8	
	69200135	Straight Connector G1/8 X 6	XP/TM version NO NMS

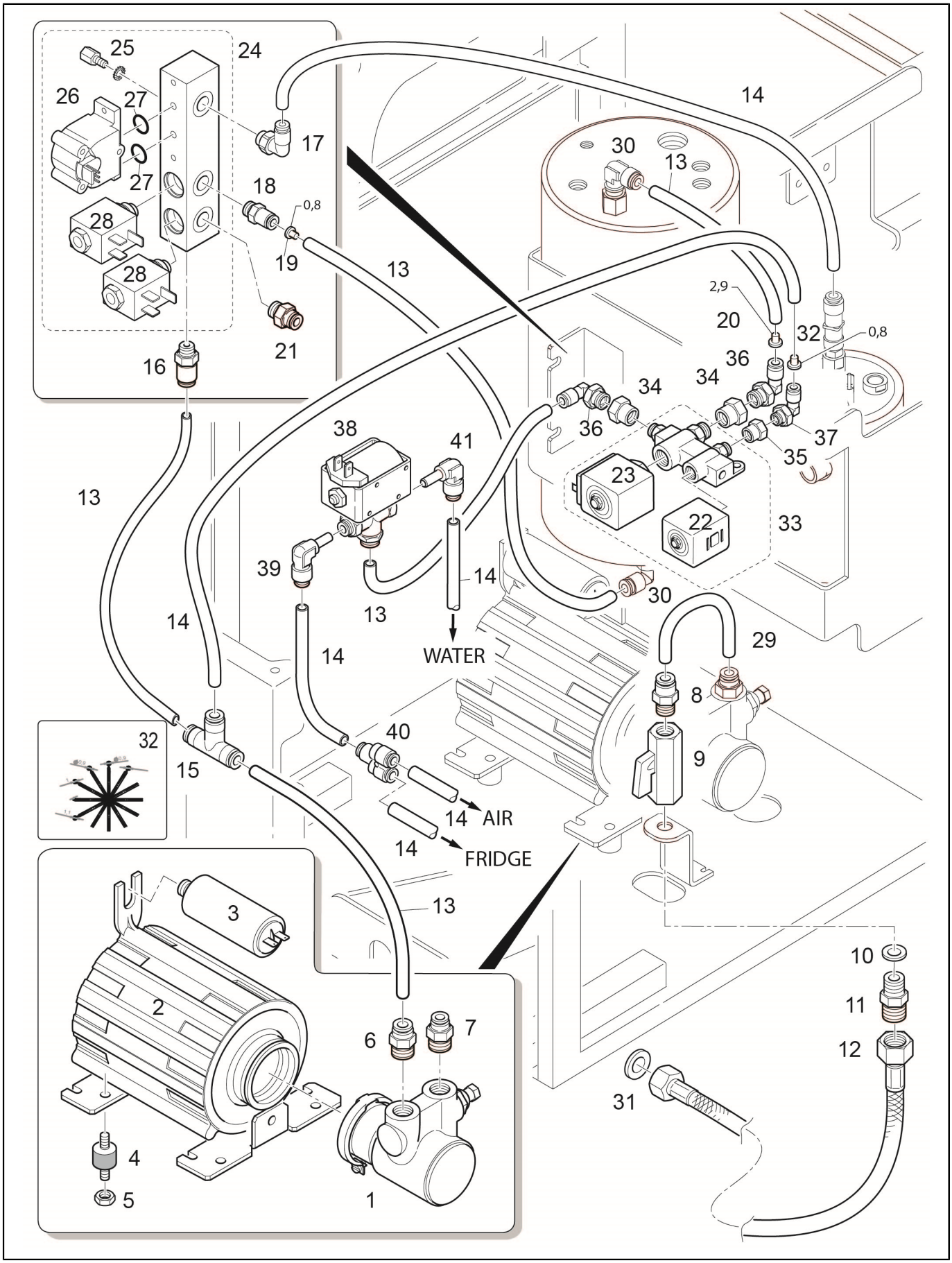
25
24
26
27
27
17
18
0,8
28
19
28
13
21
16
14
30
13
2,9
20
32
0,8
36
34
34
36
37
35
38
41
23
13
22
33
39
14
13
30
14
14
WATER
29
8
32
40
9
15
14
AIR
14
FRIDGE
13
3
10
2
11
6
7
12
31
4
5
1

Pos.	Code	Description	Notes
1	69000288	Pump Vm 100L/H	
2	00045393	Pump Motor 230 V / 50 Hz - 120 W	
	00046299	Motor 200 V	
	00100367.001	Pump Motor Assay. 230 V 50/60 Hz (Usa)	
3	00042324	Capacitor Assay. 7.0 Mf 200V	
	34020017	Capacitor 6.3Mf Lt155-255	
4	36322006	Anti-Vibrating Device 20 X 20 - M6 X 12 Sh30	
5	00001522	Keps Nut M6	
6	69200165	Straight Connector 6 X G3/8	
7	69200164	Straight Connector 8 X G3/8	
8	69200137	Straight Nipple M8 X G1/4	
9	69200131	BALL TAP G1/4	
10	00058587	Gasket 15 X 7,2 X 2,1 Rubber Epdm Perox	
11	23000288	Double Nipple G3/8 X G1/4	
12	69000737	Flex Pipe Mm1500 Nsf F3/8-F3/8 Check Valve	
13	38228073	Teflon Hose Fep D. 6 X 4	
14	38228072	Teflon Hose Fep D. 4,0 X 2,5	
15	00100897.001	T - Connectord. 6 X 4 X 6 Mm	
16	69200135	Straight Connector G1/8 X 6	
17	69200139	Elbow Connector 4 X G1/8 Ppsu	
18	69200190	Check Valve 6 X G1/8	
19	00100899.001	Flow Limiter 0,8	
20	00100939.001	Flow Limiter D. 2.9 X 4	
	10701412		
	38120337	Restriction 3,2 X 4 Peek	
21	23000299	Cap G1/8 Boiler One/Zero	
	27350014	Copper Gasket 12.5X9.8X1.5	
	69200134	Straight Connector G1/8 X 4	
22	34040197	Operator Kit 24V 2/2 T22 (Cold) Ppo	
23	34040198	Operator Kit 24V 2/2 T30 (Hot) Ppo	
24	00100313.001	Cold Water Valve Block Assay.	on machine before S/N 12011960 PIN 119415 use ACL Valves 34049007 su macchine precedenti la N/F 12011960 PIN 119415 utilizzare le valvole ACL 34049007 from S/N 12011960 PIN 119415 use SIRAI valves 34040163 su dalla N/F 12011960 PIN 119415 utilizzare valvola SIRAI 34040163
25	00046192	Spacers	
26	00053558	Flowmeter With O-Rings	
	10120008	Flowmeter Cable	
27	00055294	O-Ring Kit For Flowmeter	
28	34040179	Plunger 2/2 T22 (Sirai)	to be used on machine after S/N 12011960 PIN 119415 da utilizzare su macchine successive la N/F 12011960 PIN 119415
	34040182	Operator Kit 2/2 Ways T22 Sirai	to be used on machine after S/N 12011960 PIN 119415 da utilizzare su macchine successive la N/F 12011960 PIN 119415
	34049006	Plunger 2/2 Water T22 (Acl)	to be used on machine before S/N 12011960 PIN 119415 da utilizzare su macchine precedenti la N/F 12011960 PIN 119415
	34049007	Operator Kit 2/2 Way Water (Acl) T22	to be used on machine before S/N 12011960 PIN 119415 da utilizzare su

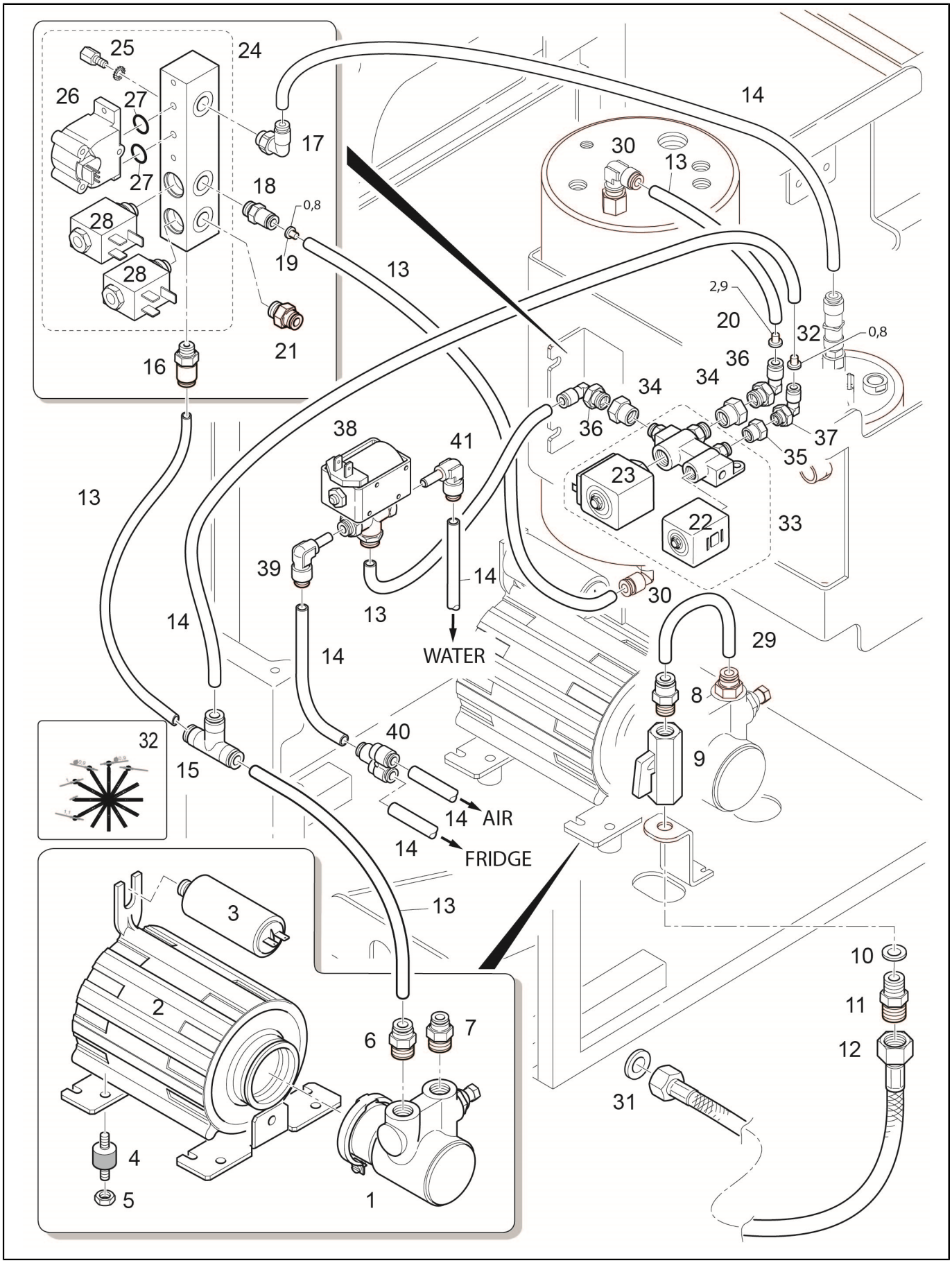
25
24
26
27
27
28
28
17
18
0,8
19
21
16
13
14
30
13
2,9
20
32
0,8
36
34
34
36
37
35
38
41
23
22
33
13
39
14
13
30
14
14
WATER
29
8
9
32
40
15
14 AIR
14 FRIDGE
13
3
2
6
7
4
5
1
10
11
12
31

Pos.	Code	Description	Notes
			macchine precedenti la N/F 12011960 PIN 119415
29	38228074	Teflon Hose Fep D. 8 X 6	
30	69200187	Y Connector D.4 Ppsu	
31	00019974	Gasket 14,8 X 9 X 2 Copper	
32	38120127	Restriction Ring Little White	
33	10701473	Economizer 24V Plastic	
	10705759	Tea Water Mixer 24V Brass	
	10705788	Tea Water Mixer 24V-Pps	
34	69200150	Connection M12 X 1,8G	
35	69200151	Connection M10 X 1,8G	
36	00053754	Threaded Elbow, Male D. 6 Mm X G1/8	
37	69200134	Straight Connector G1/8 X 4	
38	34040156	Valve 3/2 24V	
	69200174	Valve Membrane	
39	69200188	Elbow Connector 4Ff D6 Ppsu	
40	69200187	Y Connector D.4 Ppsu	
41	69200130	Elbow Connector 6X6	

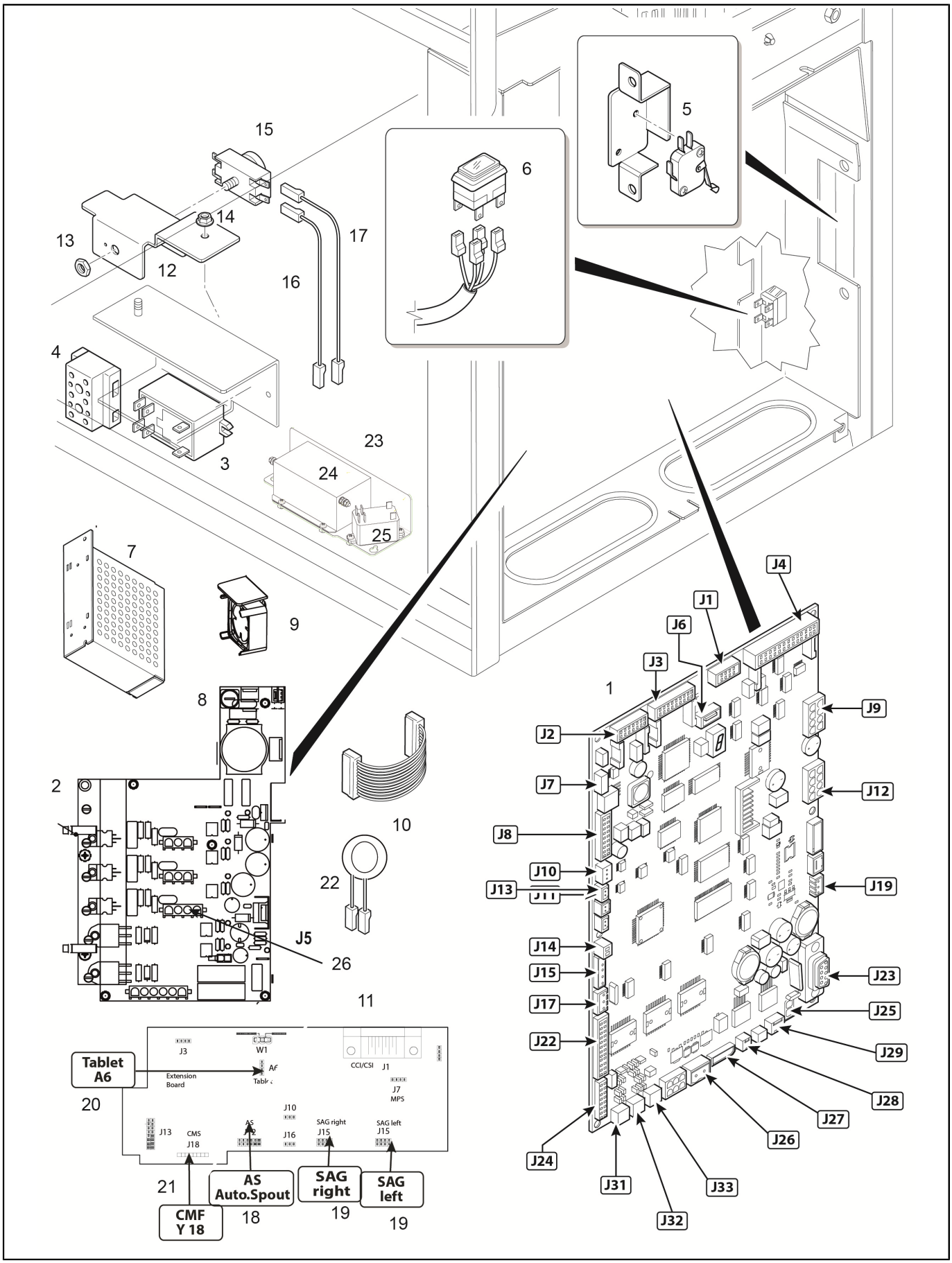
15
14
13
12
17
16
6
5
4
3
23
24
25
7
9
8
2
10
22
J5
26
11
1
J4
J1
J6
J3
J9
J2
J7
J12
J8
J10
J13
J19
J14
J15
J23
J17
J25
J22
J29
J28
J27
J26
J24
J31
J33
J32
Tablet A6
20
J3
W1
Extension Board
CCI/CSI
J1
J7 MPS
J10
J13
CMS J18
J16
SAG right J15
SAG left J15
21
CMF Y 18
AS Auto.Spout
18
SAG right
19
SAG left
19

Pos.	Code	Description	Notes
1	10701056	Kit Cpu Board Egro One Nms	
	10701624	Kit Board OCB19	
2	10701400	Power Board Egro	for all ONE/TWO/BYO with Power Switching supply from SN für alle ONE/TWO/BYO mit Schaltnetzteil ab SN
3	34200289	Heating Element Relay	
4	00053952	Connecting Terminal 3 P	
	34300072	Cable+Plug	
	34300074	Cavo H07Rn-F 3Capi Sez.2,5 L=2000	
	34300075	Cavo H07Rn-F 3Capi Sez.4 L=2500	
	34300079	Cavo H07Rn-F 5C.Sez.4 L=2500	
	34300098		
5	34100021	Micro Switch	
6	10701758	Main Switch+Cover	
7	34070300	Power Supply 24V 150W	
8	34200177	Fuse 2A 5X20	
9	34070021	fan Wired	
10	10110701	Cable Powersupply-Cpu One	
11	10110977	Wiring Cb Board To Exb	
	34070160	Egro Extension Board With Bluetooth	for options (SAG, AS, CMF, BYO) / für Optionen (SAG, AS, CMF, BYO)
12	32331595	Relay/Thermostat Bracket	
14	00001518	Keps Nut M4	
15	34200323	High Limit Thermostat 140/15 220V	
16	10110852	Extension Cable Coffee Boiler Dhe	
18	10110961	Wiring As	
19	10110962	Wiring Sag	
20	10110958	Wiring Tablet Byo Fix	
21	10110960	Wiring Cmf Valves	
22	34070236	Cable Button Display Byo	
23	10110343	Wiring Relay/Emc Filter	
24	34021013	EMC FILTER ONE	
25	34200289	Heating Element Relay	
26	10110708	Wiring Pump	

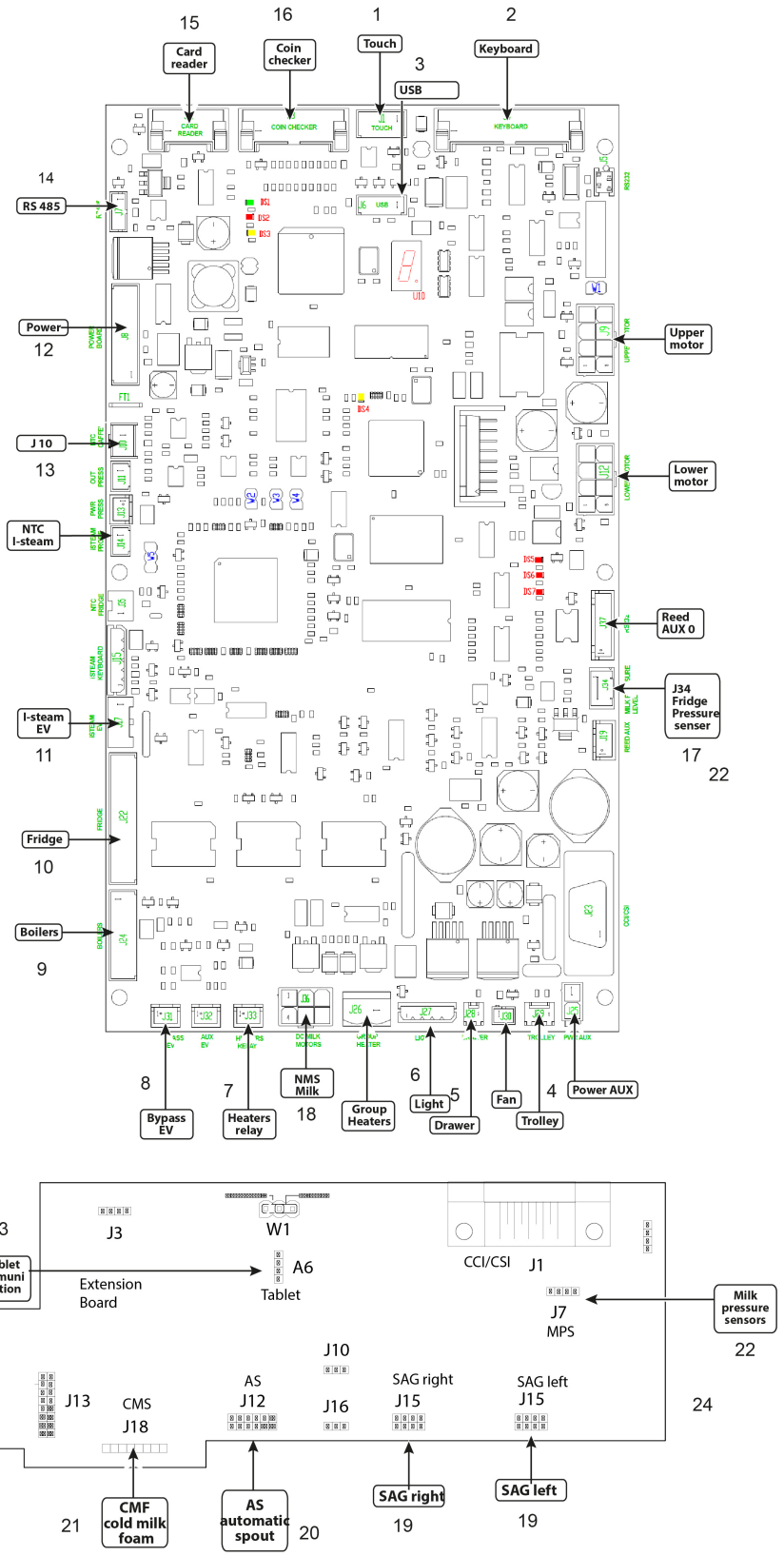
15
Card reader
16
Coin checker
1
Touch
2
Keyboard
3
USB
14
RS 485
Power
12
J 10
13
NTC I-steam
I-steam EV
11
Fridge
10
Boilers
9
Upper motor
Lower motor
Reed AUX 0
J34 Fridge Pressure senser
17
22
8
Bypass EV
7
Heaters relay
NMS Milk
18
Group Heaters
6
Light
5
Drawer
Fan
4
Trolley
Power AUX

23
Tablet comunication
J3
W1
Extension Board
A6
Tablet
CCI/CSI
J1
J7
MPS
Milk pressure sensors
22
J10
J13
CMS
J18
AS
J12
J16
SAG right
J15
SAG left
J15
24
21
CMF cold milk foam
AS automatic spout
20
SAG right
19
SAG left
19

Pos.	Code	Description	Notes
1	10110705	Wiring Set Touchscreen One	
2	00044846	Flat Cable 600Mm	
3	10110706	Extension Usb-Cable	
	34070075	Wiring Set J6 With Usb Connector (Touch Pad)	
4	10110714	Wiring Set J29	
5	10110717	Wiring Set J28	
6	10705592	Usb Wired Assy One	
7	10110716	Wiring Set J33 Relays	
8	10110704	Wiring Set J31 By Pass One	
	10110867	Wiring Valves Sirai	
9	10110867	Wiring Valves Sirai	
10	10110709	Wiring Set J22 Ks7	
	10110715	Wiring Set J22 One Quick Milk	
	10110759	Wiring Milk Pump Module Ks9	
	10110821	Wiring Set J22 One Quick Milk Nms	
	10701324	Extension Kit - Undercounter Fridge	
11	10110703	Wiring Set J17 Isteam	
	10110874	Wiring Electovalve Isteam 3Valves Cc	
12	10110712	WIRING SET J10 EXTENSION WIRING COFFEE PROBE ONE	
13	10110701	Cable Powersupply-Cpu One	
14	10110728	Wiring Powder Module - Coffee Machine	
15	10110001	Flat Cable Pay System Machine 16 Poles	
	10110002	Flat Cable Smart Card 10 Poles	
16	00034550	Cable Tie 2,5 X 200 Mm	
	34200071	Fixing Cable Clamp	
	34200301	CLAMP L.155X4,8MM	
17	10110835	Pressure Sensor Cable Set Nms 1Milk	
	10110837	Extension Cable Pressure Sensor 4Pole	
	10110839	Pressure Sensor Cable Set 2Milk	
	10110976	Cable Milk Sensor Nms	Kabel Drucksensor von Maschine / cable pressure sensor from machine
19	10110962	Wiring Sag	
20	10110961	Wiring As	
21	10110959	Wiring Valve Pump Module Cmf Ks9	
	10110960	Wiring Cmf Valves	
22	10110835	Pressure Sensor Cable Set Nms 1Milk	
	10110837	Extension Cable Pressure Sensor 4Pole	
23	10110958	Wiring Tablet Byo Fix	
24	34070236	Cable Button Display Byo	

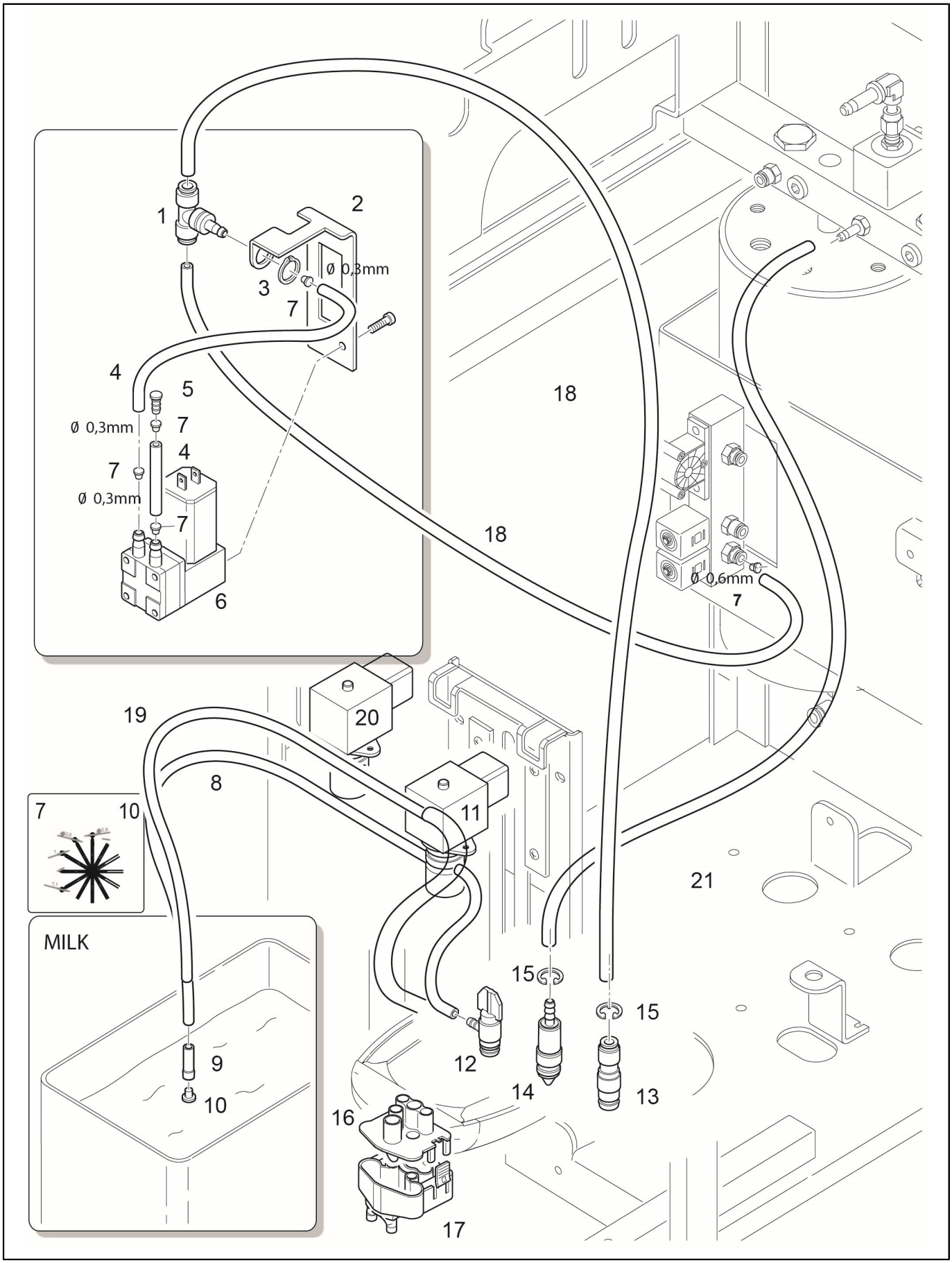
1
2
Ø 0,3mm
3
7
4
5
Ø 0,3mm
7
4
7
Ø 0,3mm
7
6
18
18
Ø 0,6mm
7
19
20
8
7
10
11
21
MILK
15
15
9
12
14
13
10
16
17

Pos.	Code	Description	Notes
1	69200128	T Fast Connector With Check Valve	
2	32332204	Bracket Air Pump Next QM	
3	39930009	Neverending Strip D.14	
4	00049209	Silicon Hose D. 7,0 X 3,0 Mm	
5	00100029.001	Insert Nipple For Froather Head	
6	10701466	air pump assy. Next QM	
	34011038A	Air Pump 24Vdc/16	
7	38120127	Restriction Ring Little White	0.3 reduction
	69150018	Filter Airpump Nms	
8	38228005	Silicon Tube D.6X4	internal pinch valve
9	10700005	Reduction Kit	
	23000196	Sucking Nozzle	
10	00100039.001	O-Ring 4,48 X 1,78 Mvq 70Sh	
	38120128	Restriction Ring Big Black	0.7 reduction
11	10110726	Wiring Set Extension Ev Pinch One	
12	00100043.001	O-Ring 6,75 X 1,78 Mvq	
	10701021	Milk Injector Quick Milk/14	
13	00100043.001	O-Ring 6,75 X 1,78 Mvq	
	10701018	Injector Nms	
14	00100038.001	O-Ring 8,73 X 1,78 Mvq	
	10701023	Steam Injector Qm	
15	00001951	Snap Ring D. 6 Inox	
16	38120210	Upper Spout Nms	
17	38120209	Lower Spout Nms D5.5	
	38120277	Coffee Outlet Lower Part D.6,3	
18	38228072	Teflon Hose Fep D. 4,0 X 2,5	
19	00060162	Silicon Hose Blue (Kb) 50Shore D. 7,0 X 4,0 Mm	external pinch valve
20	34040199	Valve Pinch Pwm	external pinch valve
21	00048474	Silicon Hose D. 7 X 4 Mm	

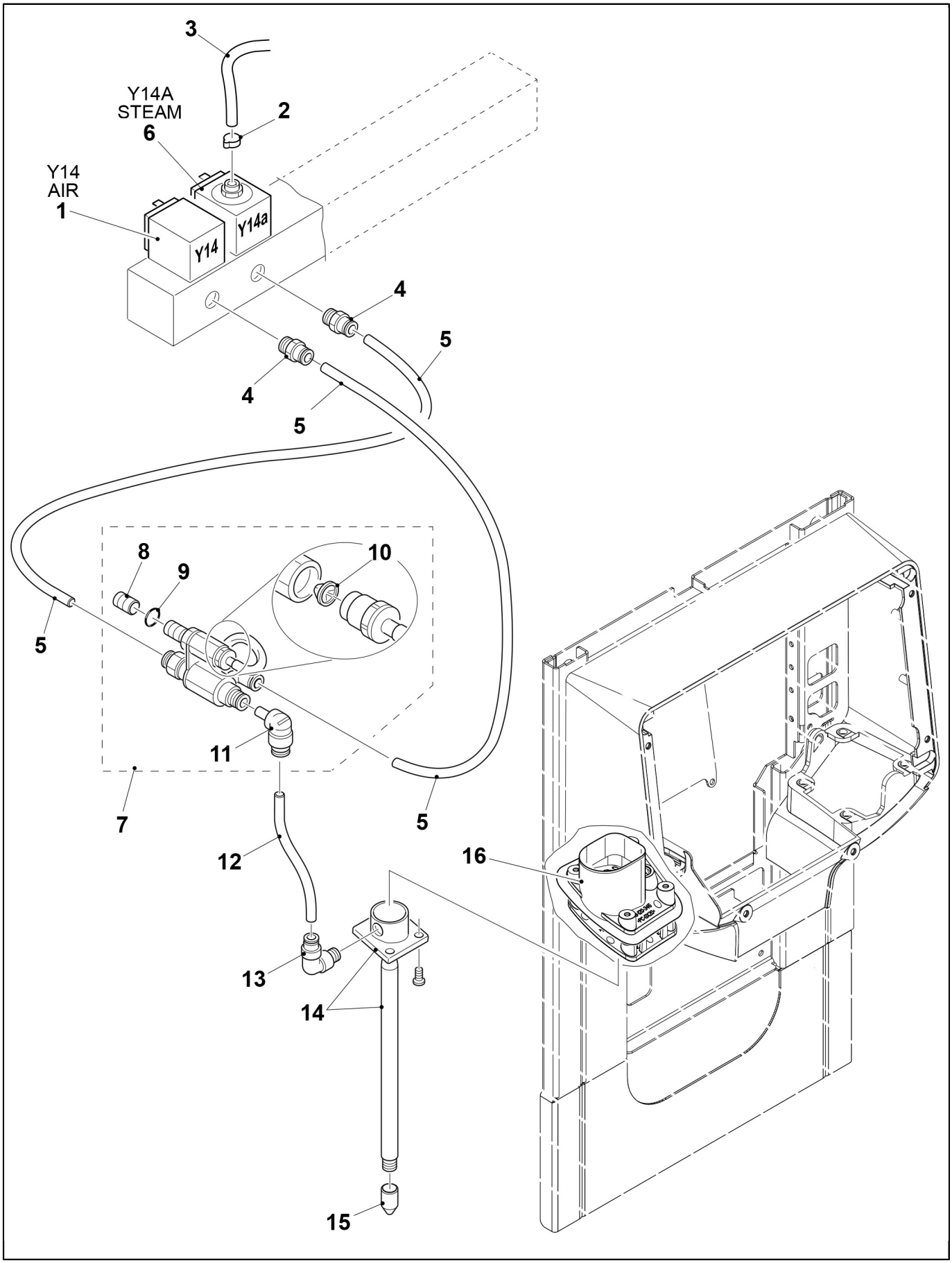
3
Y14A
STEAM
6
2
Y14
AIR
1
Y14
Y14a
4
5
4
5
8
9
10
5
11
7
5
12
16
13
14
15

Pos.	Code	Description	Notes
1	00100559.001	Operator Kit 2/2 Way Water T30 (Acl)	
2	39930011	Metal Clamp no Screw d12,5-14	
3	00004474	Silicon Hose D. 8 X 5 Mm	
4	69200135	Straight Connector G1/8 X 6	
5	38228073	Teflon Hose Fep D. 6 X 4	
6	00100116.005	Operator Kit 3/2 Ways Steam (Acl) T30	
7	10701554	Venturi Isteam Next Assy.	
8	23000092	Flow Limiter 0,25 Isteam/Yousteam	
9	36404013	O-Ring Silicone 2031	
10	36230021	Duckbill Valve	
11	69200130	Elbow Connector 6X6	
12	38228073	Teflon Hose Fep D. 6 X 4	
13	69200140	Elbow Connector6 X G1/8 Ppsu	
14	10701552	Isteam Next Assy.	
15	23000492	Sprayer Next Isteam 10x1.2	
	36930024	Isteam Sprayer Next	
16	38120345V	Adapter Cap Isteam Next	

Alphanumeric index

Code	No. table	Pos.
00000928	2002_02	21
00000928	2002_03	21
00000928	2002_50	21
00000928	2002_55	21
00000930	2002_02	12
00000930	2002_03	12
00000930	2002_50	12
00000930	2002_55	12
00000932	1001_04	36
00000935	2002_02	40
00000935	2002_03	40
00000935	2002_50	40
00000935	2002_55	40
00001062	1001_04	20
00001062	1001_50	20
00001062	1001_50	7
00001062	2003_50	13
00001065	1010	16
00001069	1001_04	24
00001069	1001_50	13
00001069	1001_50	17
00001074	2003_50	23
00001176	2002_02	4
00001176	2002_03	4
00001176	2002_50	4
00001176	2002_55	4
00001484	2006	26
00001514	1001_51	8
00001518	3000_03	14
00001521	2000_03	9
00001521	2002_02	24
00001521	2002_03	24
00001521	2002_50	24
00001521	2002_55	24
00001522	2007_02	5
00001951	6003_02	15
00002195	2004_50	8
00002240	2004_50	2
00002240	2006	6
00004473	2000_03	24
00004473	2001_02	3
00004474	2000_03	19
00004474	2001_02	2
00004474	2003_50	21
00004474	4002	3
00005295	2004_50	1
00010152	2006	21
00017719	1001_51	13
00019974	2006	21
00019974	2007_02	31
00027170	2006	21
00030494	1010	17
00034550	3001	16
00039064	2002_02	8
00039064	2002_03	8
00039067	2006	21
00042324	2007_02	3
00044464	2006	20
00044846	3001	2
00045032	2002_02	18
00045032	2002_03	18
00045032	2002_50	18
00045032	2002_55	18
00045393	2007_02	2
00045682	2006	21
00045714	2001_02	10
00045714	2001_02	11

Code	No. table	Pos.
00046069	1001_51	22
00046069	1001_51	28
00046192	2007_02	25
00046299	2007_02	2
00046844	2002_02	28
00046844	2002_03	28
00046844	2002_50	28
00046844	2002_55	28
00046933	2005	20
00048474	6003_02	21
00048548	2002_02	13
00048548	2002_03	13
00048548	2002_50	13
00048548	2002_55	13
00048550	2002_02	23
00048550	2002_03	23
00048550	2002_50	23
00048550	2002_55	23
00048747	2002_02	30
00048747	2002_03	30
00049209	1001_04	28
00049209	6003_02	4
00049966	2006	40
00053558	2007_02	26
00053754	2007_02	36
00053952	3000_03	4
00054861	2002_02	6
00054861	2002_03	6
00054938	1001_04	27
00054938	1001_50	18
00055294	2007_02	27
00055794	2000_03	8
00055795	2001_02	6
00056751	2006	29
00057446	2002_02	41
00057446	2002_03	41
00057912	2003_50	20
00057912	2006	24
00058587	2007_02	10
00060116	2002_02	5
00060116	2002_03	5
00060160	2006	22
00060162	6003_02	19
00060283	2002_02	17
00060283	2002_03	17
00060283	2002_50	17
00060283	2002_55	17
00060858	2002_02	27
00060858	2002_03	27
00060858	2002_50	27
00060858	2002_55	27
00100001.208	1001_04	22
00100013.001	2003_50	19
00100013.001	2006	27
00100016.005	2006	23
00100029.001	6003_02	5
00100038.001	2000_03	20
00100038.001	6003_02	14
00100039.001	6003_02	10
00100043.001	2000_03	26
00100043.001	6003_02	12
00100043.001	6003_02	13
00100059.001	2006	17
00100116.005	2006	23
00100116.005	4002	6
00100136.001	2002_02	7
00100136.001	2002_03	7

Code	No. table	Pos.
00100147.001	2000_03	3
00100149.001	2000_03	3
00100186.013	2000_03	21
00100236.001	2006	18
00100267.001	2006	7
00100268.002	2006	8
00100300.001	2006	12
00100313.001	2007_02	24
00100351.001	2006	5
00100367.001	2007_02	2
00100506.001	2002_02	9
00100506.001	2002_03	9
00100559.001	2000_03	29
00100559.001	4002	1
00100560.001	2000_03	29
00100565.001	2005	16
00100793.001	2006	9
00100802.001	2006	1
00100825.001	2006	34
00100862.003	2001_02	11
00100869.001	2006	15
00100877.001	2005	2
00100877.002	2005	2
00100878.001	2005	1
00100878.002	2005	1
00100897.001	2007_02	15
00100899.001	2007_02	19
00100939.001	2007_02	20
00101000.001	2005	19
00101048.001	2005	14
00101070.001	2005	17
10020002	2000_03	1
10020018	2006	1
10020038	2000_03	1
10020038	2000_03	1
10042099	2000_03	18
10042199	2000_03	33
10042199	2000_03	4
10046062	2000_03	28
10049014	1001_04	9
10049133	2003_50	1
10054002	2002_02	37
10054002	2002_03	37
10054010	2002_50	37
10054010	2002_55	37
10060006	2000_03	34
10060009	2000_03	17
10060060	2006	20
10060479	2000_03	17
10060606	2000_03	29
10060607	2000_03	3
10060607	2000_03	3
101000009	2002_50	1
101000037	2002_50	1
10110001	3001	15
10110002	3001	15
10110008	2006	39
10110343	3000_03	23
10110701	3000_03	10
10110701	3001	13
10110703	3001	11
10110704	3001	8
10110705	3001	1
10110706	3001	3
10110708	3000_03	26
10110709	3001	10
10110712	3001	12

Alphanumeric index

Code	No. table	Pos.
10110714	3001	4
10110715	3001	10
10110716	3001	7
10110717	3001	5
10110726	6003_02	11
10110728	3001	14
10110729	2000_03	11
10110759	3001	10
10110821	3001	10
10110835	3001	17
10110835	3001	22
10110837	3001	17
10110837	3001	22
10110839	3001	17
10110852	3000_03	16
10110867	3001	8
10110867	3001	9
10110868	2000_03	30
10110874	3001	11
10110958	3000_03	20
10110958	3001	23
10110959	3001	21
10110960	3000_03	21
10110960	3001	21
10110961	1001_04	39
10110961	3000_03	18
10110961	3001	20
10110962	3000_03	19
10110962	3001	19
10110976	3001	17
10110977	3000_03	11
10120004	2006	14
10120008	2007_02	26
10120021	2003_50	24
10700005	6003_02	9
10700176	2002_02	3
10700176	2002_03	3
10700177	2002_02	2
10700177	2002_03	2
10700178	2002_02	33
10700178	2002_50	33
10700193	2002_03	33
10700193	2002_55	33
10700232	2000_03	32
10700232	2001_02	7
10700281	2001_02	3
10700998	2006	38
10701007	2002_50	3
10701007	2002_55	3
10701008	2002_50	2
10701008	2002_55	2
10701018	6003_02	13
10701019	2000_03	26
10701020	2000_03	20
10701021	6003_02	12
10701023	6003_02	14
10701036	2002_02	36
10701036	2002_03	36
10701050	2002_02	11
10701050	2002_03	11
10701050	2002_50	11
10701050	2002_55	11
10701051	2002_02	1
10701051	2002_03	1
10701051	2002_55	1
10701056	3000_03	1
10701094	2000_03	1

Code	No. table	Pos.
10701148	2000_03	25
10701173	2006	3
10701209	2005	12
10701210	2005	12
10701254	2006	3
10701324	3001	10
10701374	2006	1
10701395	1010	1
10701400	3000_03	2
10701412	2007_02	20
10701422	1001_50	28
10701424	2003_50	17
10701430	1001_50	23
10701430	2004_50	16
10701434	1001_50	9
10701434	1001_51	27
10701434	2003_50	12
10701435	1001_51	1
10701465	1001_50	16
10701466	1001_50	10
10701466	6003_02	6
10701473	2007_02	33
10701497	1001_51	18
10701527	1001_50	27
10701552	4002	14
10701554	4002	7
10701591	2002_55	41
10701624	3000_03	1
10701629	1001_51	10
10701642	2000_03	11
10701680	1001_50	19
10701753	1001_50	1
10701758	1001_51	16
10701758	3000_03	6
10701860	1001_51	10
10701884	1001_51	10
10701885	1001_51	10
10701898	1001_50	1
10701904	2002_50	36
10701904	2002_55	36
10702046	1001_51	26
10702047	1001_51	26
10705232	2006	16
10705233	2006	19
10705529	2005	7
10705592	3001	6
10705706	2005	18
10705713	2005	15
10705714	2005	15
10705715	2005	12
10705716	2005	12
10705717	2005	18
10705759	2007_02	33
10705788	2007_02	33
10781313	1001_51	17
20200251	2000_03	23
23000092	4002	8
23000128	2005	22
23000194	2006	37
23000196	6003_02	9
23000277	1001_04	14
23000277	1001_50	21
23000288	2007_02	11
23000289	2000_03	31
23000299	2006	30
23000299	2007_02	21
23000309	2000_03	10

Code	No. table	Pos.
23000320	2000_03	22
23000322	2000_03	6
23000332	1001_04	5
23000332	2003_50	2
23000339	2003_50	15
23000339	2004_50	10
23000400	2004_50	7
23000492	4002	15
23220001	2000_03	36
23220014	2000_03	37
24300010	2002_02	32
24300014	2002_50	32
24300014	2002_55	32
25111006	2003_50	3
25135017	1001_04	12
25135019	1001_04	11
26220005	1001_04	3
26220005	2003_50	4
26220005	2004_50	4
27350001	2000_03	17
27350001	2000_03	35
27350014	1001_50	18
27350014	2000_03	7
27350014	2006	11
27350014	2007_02	21
30001047	2006	10
30001048	2002_02	19
30001048	2002_03	19
30001048	2002_50	19
30001048	2002_55	19
30001055	2004_50	9
32331403	2005	10
32331404	2005	9
32331443	2002_02	20
32331443	2002_03	20
32331443	2002_50	20
32331443	2002_55	20
32331498	2002_02	14
32331498	2002_03	14
32331498	2002_50	14
32331498	2002_55	14
32331595	3000_03	12
32331613	1001_50	6
32331613	2003_50	14
32331614	1001_50	8
32331780	2000_03	13
32332038	1001_04	29
32332077	1001_04	18
32332163	1010	3
32332164	1010	4
32332165	1010	5
32332166	1010	6
32332167	1010	7
32332168	1010	8
32332184	1001_51	20
32332185	1001_51	19
32332186	1001_51	4
32332203	1001_50	17
32332204	1001_50	13
32332204	6003_02	2
32332283	1010	1
32332284	1010	2
32551067A	1001_50	26
32551068A	1001_50	24
32551069A	1001_50	25
32551117A	1001_50	25
32551119A	1001_51	30

Alphanumeric index

Code	No. table	Pos.
32551383A	1001_51	24
34010014	1001_04	30
34010015A	2005	24
34010017	1001_51	1
34011038A	1001_04	25
34011038A	1001_50	11
34011038A	6003_02	6
34020017	2007_02	3
34020034	2005	17
34020125	1001_51	14
34020125	2002_02	35
34020125	2002_03	35
34020125	2002_50	35
34020125	2002_55	35
34021013	3000_03	24
34040156	2001_02	12
34040156	2007_02	38
34040158	1001_04	16
34040158	1001_50	22
34040177	2000_03	29
34040178	2000_03	3
34040179	2007_02	28
34040181	2000_03	3
34040182	2007_02	28
34040183	2000_03	29
34040184	2000_03	3
34040194	1001_50	3
34040197	2007_02	22
34040198	2007_02	23
34040199	6003_02	20
34049006	2007_02	28
34049007	2007_02	28
34070021	3000_03	9
34070075	1001_51	15
34070075	3001	3
34070160	3000_03	11
34070236	3000_03	22
34070236	3001	24
34070300	3000_03	7
34070313	1001_04	38
34100021	1010	9
34100021	3000_03	5
34160024	2006	13
34200009	1001_51	29
34200071	2002_02	39
34200071	2002_03	39
34200071	2002_50	39
34200071	2002_55	39
34200071	3001	16
34200177	3000_03	8
34200288	2006	14
34200289	3000_03	25
34200289	3000_03	3
34200301	3001	16
34200323	2000_03	13
34200323	3000_03	15
34200358	1001_04	26
34300072	3000_03	4
34300074	3000_03	4
34300075	3000_03	4
34300079	3000_03	4
34300098	3000_03	4
35002509	2000_03	14
35002513	2000_03	14
36130008	2006	20
36201035	2006	4
36201037	2002_50	8

Code	No. table	Pos.
36201037	2002_55	8
36201038	2004_50	5
36220009	1001_04	6
36220009	2003_50	5
36220009	2004_50	11
36220009	2006	20
36230021	4002	10
36301040	1001_04	10
36322006	2007_02	4
36404013	2006	20
36404013	4002	9
36404022	1001_04	9
36404022	2003_50	7
36404024	2002_50	7
36404024	2002_55	7
36404053	2006	20
36404054	2006	36
36404056	1001_04	15
36404056	1001_50	21
36404066	2002_50	9
36404066	2002_55	9
36404068	2004_50	6
36405002	1001_51	23
36901955	2006	2
36930016	1001_04	8
36930016	2003_50	6
36930016	2004_50	13
36930017	2003_50	16
36930017	2004_50	12
36930022	2002_50	6
36930022	2002_55	6
36930024	4002	15
36930110	2002_02	10
36930110	2002_03	10
36930111	2002_02	22
36930111	2002_03	22
36930117	2002_50	10
36930117	2002_55	10
36930118	2002_50	22
36930118	2002_55	22
36990025	2005	21
36990026	2005	13
36990083	1001_04	31
36990096	1001_51	2
37030408	1010	10
37030408	2006	13
37040409	2002_02	26
37040409	2002_02	40
37040409	2002_03	26
37040409	2002_03	40
37040409	2002_50	26
37040409	2002_55	26
37040510	2006	35
37040621	2006	32
37041020	1010	11
37060306	2002_02	38
37060306	2002_03	38
37060306	2002_50	38
37060306	2002_55	38
37060330	1001_51	5
37090405	1001_51	3
37090405	1001_51	6
37113508	2005	11
37155011	2002_02	25
37155011	2002_03	25
37155011	2002_50	25
37155011	2002_55	25

Code	No. table	Pos.
37155012	1001_04	33
37370301	1001_51	12
37410300	1001_51	7
37410300	2005	11
37410303	1010	12
37411001	2006	25
37420300	1001_04	19
37420300	1001_50	20
37420300	2002_02	38
37420300	2002_03	38
37420300	2002_50	38
37420300	2002_55	38
37420401	1001_04	21
37420501	1001_04	35
37420601	2006	33
37430400	1001_04	23
37430400	1001_50	13
37430400	1001_50	17
37430400	2006	13
37431600	1001_04	4
37431600	2003_50	10
37510201	2004_50	3
37510600	1001_04	32
37900115	1001_50	28
37900741	1001_51	32
38120054	1010	13
38120075	2005	4
38120076	2005	6
38120097	1001_51	11
38120115	2002_02	31
38120115	2002_03	31
38120119	2002_02	30
38120119	2002_03	30
38120119	2002_50	30
38120119	2002_55	30
38120120	2002_02	29
38120120	2002_03	29
38120120	2002_50	29
38120120	2002_55	29
38120127	1001_50	14
38120127	2007_02	32
38120127	6003_02	7
38120128	6003_02	10
38120209	6003_02	17
38120210	6003_02	16
38120277	6003_02	17
38120317	1001_04	34
38120337	2007_02	20
38120340	1001_51	25
38120343	1001_50	4
38120344	1001_50	2
38120344	1001_50	9
38120344	2003_50	11
38120345V	4002	16
38120348	2002_03	32
38120462	2002_50	31
38120462	2002_55	31
38120580	2005	3
38120581	2005	5
38120589	1001_04	37
38228005	6003_02	8
38228072	2000_03	16
38228072	2002_02	15
38228072	2002_03	15
38228072	2002_50	15
38228072	2002_55	15
38228072	2007_02	14

Alphanumeric index

Code	No. table	Pos.
38228072	6003_02	18
38228073	2001_02	1
38228073	2003_50	18
38228073	2004_50	15
38228073	2007_02	13
38228073	4002	12
38228073	4002	5
38228074	2007_02	29
38910003	1010	14
39110026	2002_02	34
39110026	2002_03	34
39110026	2002_50	34
39110026	2002_55	34
39110038	1001_04	7
39110038	2003_50	8
39110062	1001_50	28
39920015	1001_51	21
39930009	6003_02	3
39930011	4002	2
40200013	2002_50	5
40200013	2002_55	5
69000174	1010	15
69000244	2000_03	15
69000288	2007_02	1
69000319	1001_51	32
69000337	2005	7
69000339	2005	8
69000415	2000_03	2
69000417	2006	2
69000424	1001_51	31
69000683	1001_51	13
69000737	2007_02	12
69150018	1001_04	13
69150018	1001_50	15
69150018	6003_02	7
69200073	2005	23
69200128	1001_50	12
69200128	6003_02	1
69200130	1001_04	1
69200130	2007_02	41
69200130	4002	11
69200131	2007_02	9
69200133	2002_02	16
69200133	2002_03	16
69200133	2002_50	16
69200133	2002_55	16
69200134	2007_02	21
69200134	2007_02	37
69200135	2003_50	22
69200135	2004_50	14
69200135	2006	28
69200135	2006	40
69200135	2007_02	16
69200135	4002	4
69200137	2007_02	8
69200139	2007_02	17
69200140	1001_04	2
69200140	2003_50	9
69200140	4002	13
69200141	2006	31
69200142	2000_03	5
69200147	1001_04	17
69200147	1001_50	19
69200150	2007_02	34
69200151	2007_02	35
69200162	2001_02	5
69200164	2007_02	7

Code	No. table	Pos.
69200165	2007_02	6
69200173	2000_03	12
69200174	2007_02	38
69200187	2000_03	27
69200187	2007_02	30
69200187	2007_02	40
69200188	2007_02	39
69200190	2007_02	18

Contacts

HEADQUARTERS, PRODUCTION PLANT AND R&D CENTERS

Rancilio Group s.p.a.
Viale della Repubblica 40
20010 Villastanza di Parabiago
Milano - Italy
Tel +39 0331 408200
Fax +39 0331 551437
www.ranciliogroup.com
info@ranciliogroup.com

Egro Suisse AG
Bahnhofstrasse 66
5605 Dottikon - Switzerland
Tel. +41 (0)56 616 95 95
Fax +41 (0)56 616 95 97
www.egrocoffee.com
info@egrocoffee.com

WORLDWIDE BRANCH LOCATIONS

SPAIN
RancilioGroup Espana, s.a.
Gran Vía de Carlos III, 84 3ª
Edificio Trade
08028 Barcelona - Spain
Ph. +34 902 884 275
Ph. +34 934 923 414
Fax +34 934 965 701
www.ranciliogroup.com
info-es@ranciliogroup.com

PORTUGAL
Rancilio Group Portugal Lda
Estrada da Falagueira nº 68 E
2700-365 Amadora-Lisboa - Portugal
Ph. + 351 21 019 10 91
Fax + 351 21 019 10 91

Rua Nova do Seixo 1282
4465-706 Leca do Balio-Porto - Portugal
Ph. + 351 22 010 14 19
Fax + 351 22 010 14 19
www.ranciliogroup.com
info-pt@ranciliogroup.com

GERMANY
Rancilio Group Deutschland GmbH
Talstrasse 27
97990 Weikersheim - Germany
Ph. +49 7934 99 29 30
Fax +49 7934 99 29 330
www.ranciliogroup.de
info-de@ranciliogroup.com

SWITZERLAND
Egro Suisse AG
Bahnhofstrasse 66
5605 Dottikon - Switzerland
Tel. +41 (0)56 616 95 95
Fax +41 (0)56 616 95 97
www.egrosuisse.ch
info@egrosuisse.ch

USA/CANADA
RancilioGroup North America Inc.
1340 Internationale Parkway / Suite 200
Woodridge, IL 60517 - U.S.A.
Ph: +1 630 914 7900
Fax: +1 630 914 7901
Toll Free: +1 877 726 2454
www.ranciliogroup.com
info@ranciliogroupna.com