EGRO
SWISS COFFEE TECHNOLOGY

E305060 v.128

SPARE PARTS CATALOGUE

en-US

EGRO 70 SERIES

EGRO 70 SERIES

Index

Table K10350_01 - Beans Hopper.... 4
Table K10300_01 - Front view.... 6
Table K14030_04 - Coffee and hot Water spout.... 8
Table K10330_01 - Grinder.... 10
Table K14091_02 - Coffee boiler from 03.2006.... 12
Table K10539_01 - drain Water hose.... 14
Table K14030_02 - Milk line MLR 5 KS 6+7.... 16
Table K14092_01 - Hot Water boiler from 03.2006.... 18
Table K10929_02 - Cold Water valve block.... 20
Table K10491_01 - Hot Water spout.... 22
Table K14050_03 - Spindle Motor NBUP from 03.2012.... 24
Table K11749_02 - Steam valve block MLR 5.... 26
Table K14090_01 - Boiler group.... 28
Table K10470_03 - Water pump without MLR.... 30
Table K14040_01 - Brewing group.... 32
Table K14040_02 - Brewing group valve.... 34
Table K14093_03 - Steam boiler from 03.2006.... 36
Table K10840_01 - Steam spout.... 38
Table K14030_01 - Milk line MLR 1+2 KB.... 40
Table K10500_01 - Electrical components.... 42
Table K14016_01 - Electrical circuits main board.... 44
Table K14015_01 - Electrical circuits power supplay.... 46
Table K13305_03 - Electrical circuits MLR 5 KS 6 + 7.... 48
Table K03950_01 - Electrical accessories.... 50
Alphanumeric index.... 52

K10350_01

Beans Hopper

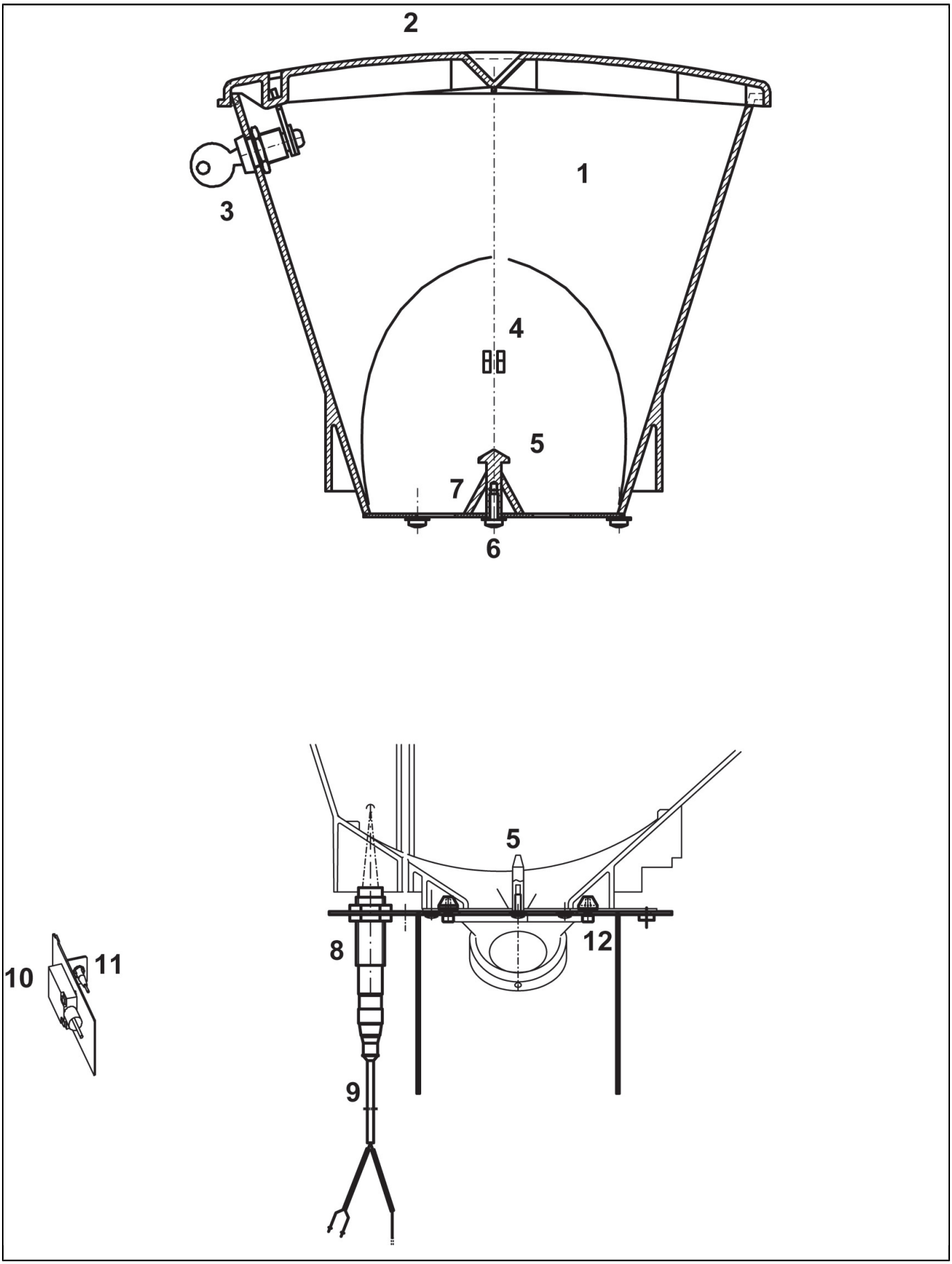

K10350_01

Beans Hopper

POS.	CODE	DESCRIPTION	NOTES
1	00039325	BEANS HOPPER ASSAY.	
	00049849	BEANS HOPPER ASSAY. IMS (WITHOUT PARTITION WALL)	
2	00039083	COVERFOR BEANS HOPPER	
3	10705529	LOCK ASSAY. RONIS M15X17,5 WITH HOOK 25.5MM	
	10705530	LOCK 90 LEFT M15 X 17,5 WITH HOOK 25,5	
4	00045069	PARTITION WALL	
5	00049848	DISTANCE TAPPET	
6	00001076	CROSSED RAISED CHEESE HEAD SCREW M4 X 12 MM	
7	00030499	WASHER	
8	00049538	BEAN SENSOR REFLECTOR SWITCH	
9	00049852	BEANS SENSOR CABLES	
10	00050117	MILK SENSOR WITH CIRCUIT SET	
11	00040730	BATTERY TO LCD THERMOME. 1.5V LR44	
	00049510	DIGITAL LCD THERMOMETER C	
12	00060441	SERVICE SET CENTERING BOLT FOR BEAN HOPPER (10pc)	

K10300_01

Front view

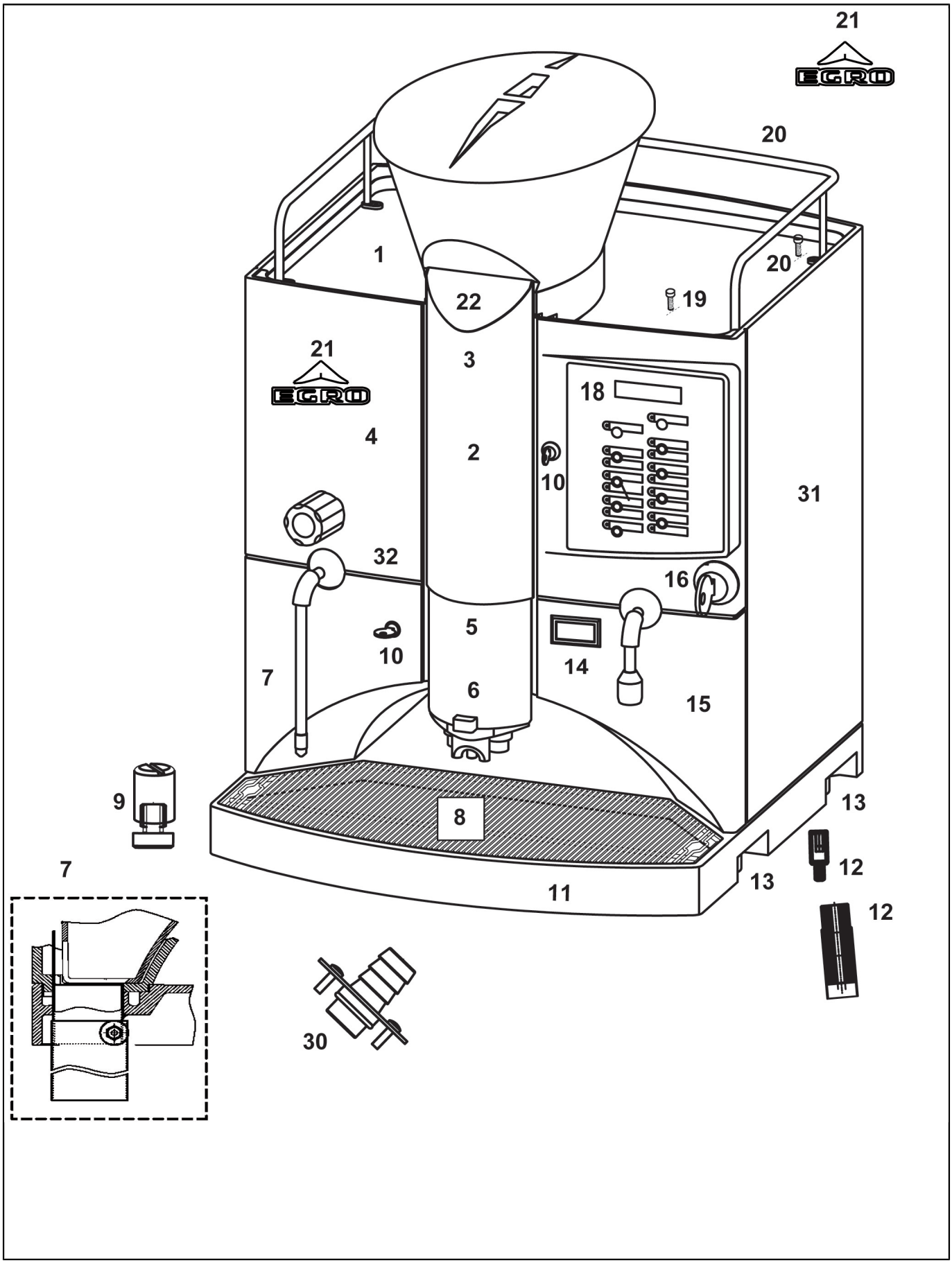

K10300_01

Front view

POS.	CODE	DESCRIPTION	NOTES
1	00038899	CUP TRAY	
	00042264	CUP WARMER TRAY ASSAY. 60W / 230V	
2	00058398	RETROFIT SET OUTPUT STANDARD	
	00058399	RETROFIT SET OUTPUT SELF	
3	00058641	COVERASSAY. SELF.	
	00058869	COVER	
4	00040264A	UPPER FRONT PANEL LEFT S70 DARK GREY 9023	
	00040264B	UPPER FRONT PANEL SX 70 LIGHT GREY 9022	
	00040264C	UPPER FRONT PANEL LEFT S70 NCS 9502-R	
	00040264E	FRONTALE SUP.SX 70 ROSA RAL 3033	
5	00057648	COVER	
6	00012636	REED CONTACT WITH DRAWER	
7	00040018	GROUNDS DRAWER PAINTED + LOCK	
	00040019	GROUNDS DRAWER DREGS SHED PAINTED + LOCK	
	00040562	Grounds drawer painted	
	00058174	DREGS SHED ASSAY. RETROFIT KIT	
8	00055003	DRIP GRID FOR DRAIN TRAY, MIDDLE ASSAY.	
9	00055557	CUP GUIDE SET	
10	10705529	LOCK ASSAY. RONIS M15X17,5 WITH HOOK 25.5MM	
11	00040262	BOTTOM PLATE	
12	00034088	SPACER WITH RUBBER FOOT BACKM 8 X 100 MM	
	00034089	SPACER WITH RUBBER FOOT FRONTM 8 X 100 MM	
	00049784	SPACER M 8 X 25 MM	
13	00004014	RUBBER FOOT, FRONT	
	00004015	SLIDING FOOT, AFT	
14	00040730	BATTERY TO LCD THERMOME. 1.5V LR44	
	00049510	DIGITAL LCD THERMOMETER C	
15	00055460A	FRONT PANEL DX DARK GREY	
	00055460B	FRONT PANEL DX LIGHT GREY	
	00055460C	FRONT PANEL DX BLACK	
	00055460E	FRONT PANEL DX PINK	
16	00039817	KEY TO SWITCH	
	00040613	KEY LOCK SWITCH ASSAY.	
18	00054981	ALUMINIUM PLATE FOR KEYBOARD SERIE 70	
	00055734	KEYBOARD FOIL, 5 PRODUCTS	
	00058366	KEYBOARD FOIL, 15 PRODUCTS	
	00100054.005	KEYBOARD FOIL, 5 PRODUCTS (FROM 06)	
	00100054.009	KEYBOARD FOIL, 9 PRODUCTS (FROM 06)	
	00100054.015	KEYBOARD FOIL, 15 PRODUCTS (FROM 06)	
19	00001087	RAISED CHEESE HEAD SCREW M5 X 12 MM	
20	00030059	CROSSED RAISED CHEESE HEAD SCREW M5 X 20 MM	
	00056836	CUPS BORDER WITH SREW	
21	45010208	EGRO LOGO	
	45010209	EGRO LOGO	
22	00038850	MANUAL INLET ASSAY.	
30	00040404	O-RING 15 X 2	
	00056544	SERVICE KIT TO DRAIN CONNECTION	
31	00040263A	HOUSING ARCO/70 DARK GREY 9023	
	00040263B	ALLOGGIAMENTO ARCO/70 GRIGIO CHIARO 9022	
	00040263C	ALLOGGIAMENTO ARCO/70 NCS 9502-R	
	00040263E	ALLOGGIAMENTO ARCO/70 ROSA RAL 3033	
	00040263F	ALLOGGIAMENTO ARCO/70 BLU RAL 5026	
32	00029575	RAISED CHEESE HEAD SCREWM5 X 14 MM	

K14030_04

Coffee and hot Water spout

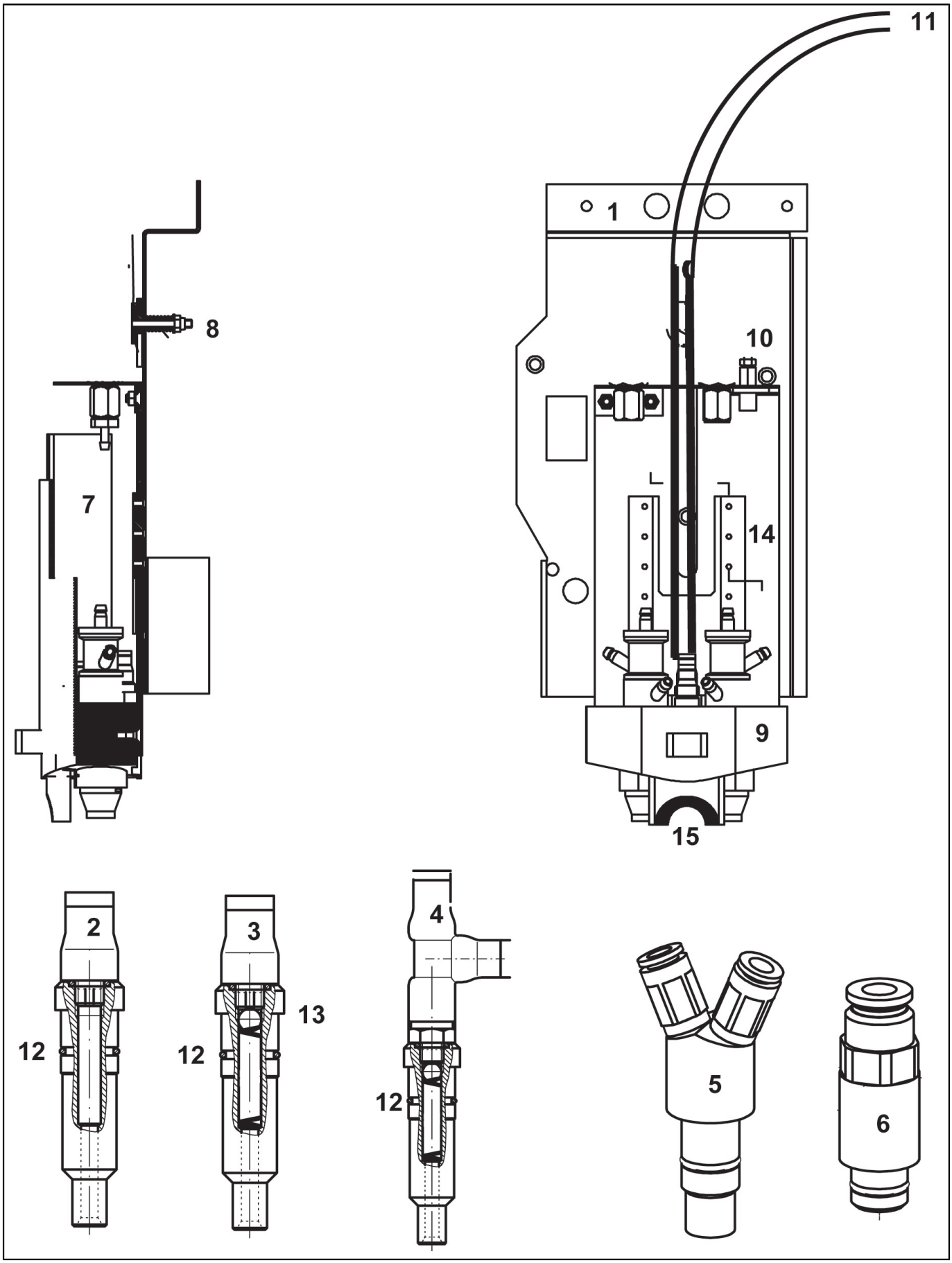

K14030_04

Coffee and hot Water spout

POS.	CODE	DESCRIPTION	NOTES
1	00057655	COFFEE SPOUT ASSAY.	
2	00050096	COFFEE SPOUT WITHOUT CHECKVALVE	
3	00047934	PRESSURE VALVE	
4	00047935	PRESSURE VALVE ASSAY. WITH BYPASS	
5	00050095	PRESSURE VALVE BY PASS	
6	00054647	HOT WATER SPOUT BY SELF SERVICE	
7	00057648	COVER	
8	00054946	SCREW WITH SPRING ASSAY.	
9	00047079	COFFEE SPOUT HOUSING	
10	00046272	RAISED CHEESE HEAD SCREW M 4 X 8 MM	
	00047937	COVERSTOP	
11	38228072	TEFLON HOSE FOP D. 4,0 X 2,5 MM	
12	00002207	O-RING 8 X 1 EPDM	
13	00047960	GLASS-BALL, CHECKVALVE 4.0MM	
14	00055443	GLIDER ASSAY.	
15	00047077	FLOW CUP SELF	

K10330_01

Grinder

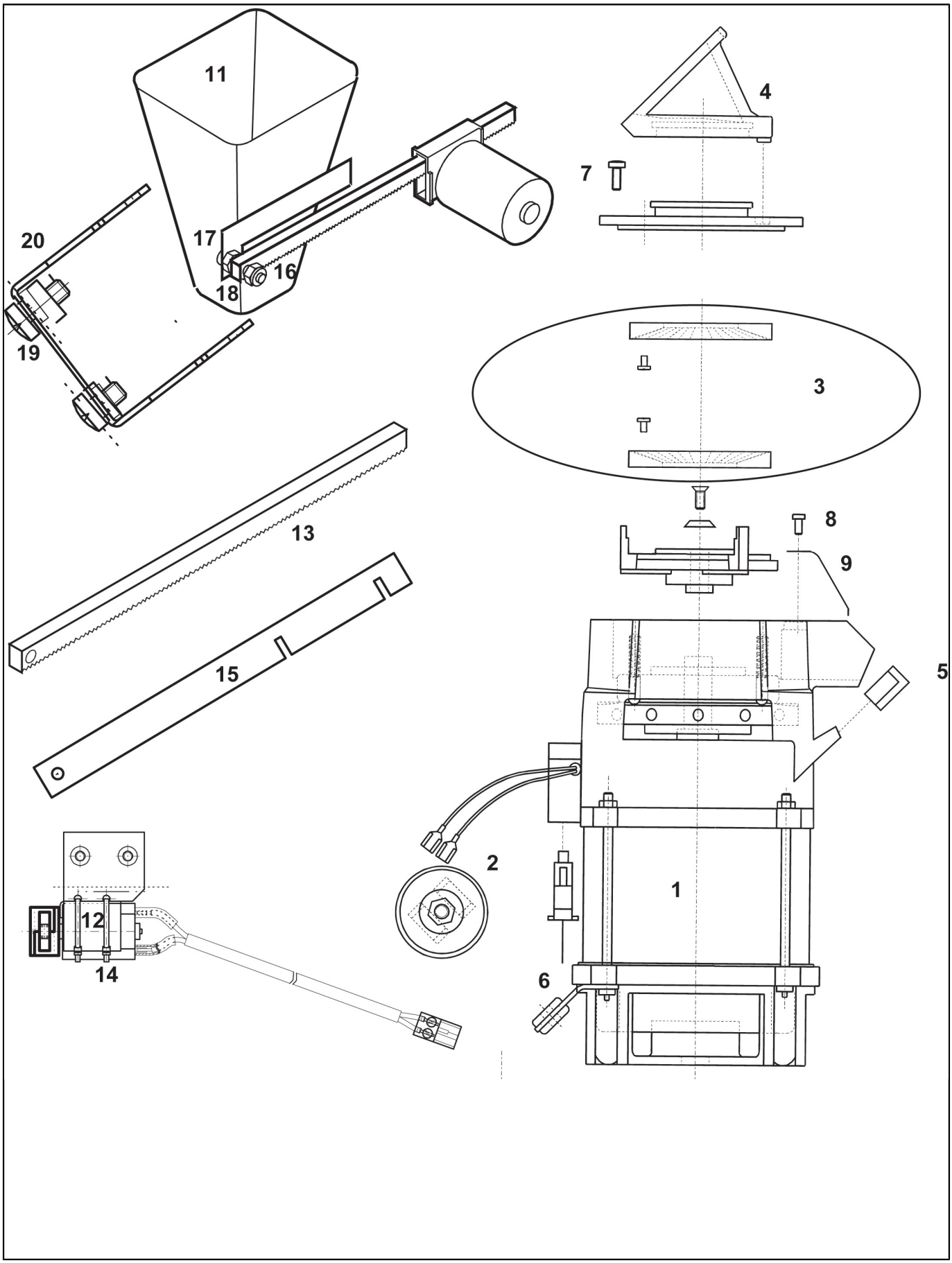

K10330_01

Grinder

POS.	CODE	DESCRIPTION	NOTES
1	00041252	GRINDER ASSAY. 200V - 50/60HZ	
	00100779.001	GRINDER ASSY. 230V - 50HZ	
2	34020022	ROCKY CAPACITOR 230V	
	34020025	CONDENSER MD50 230V	
3	00055923	GRINDER PLATES, PAIR D. 64 X 56 X 8,8 MM WITH SREW	
4	00039437	SEAL (COLLAR)	
5	00039136	GRINDER SUPPORT	
6	00039054	RUBBER BUSHING D. 10 MM	
7	37060413	SCREW M 4 X 12	
8	00039937	CROSSED RAISED CHEESE HEAD SCREW M3 X 4 MM	
9	00038787	LAMELLAR S70	
11	00038826	FUNNEL (COFFEE DOSING)	
12	00039811	SWING MOTOR 24 V DC	
13	00039208	TOOTHED ROD	
14	34200069	CABLE BINDING 360 X 4.7 MM	
15	00042841	FUNNEL SEAWEEDS	
16	00001514	6-EDGE NUT SELF LOCKING M3	
17	00001065	RAISED CHEESE HEAD SCREWM3 X 16 MM	
18	00001439	6-EDGE NUT M3 X 0,8 MM	
19	00001074	CROSSED RAISED CHEESE HEAD SCREW M4 X 10 MM	
20	00038823	HOLDER	

K14091_02

Coffee boiler from 03.2006

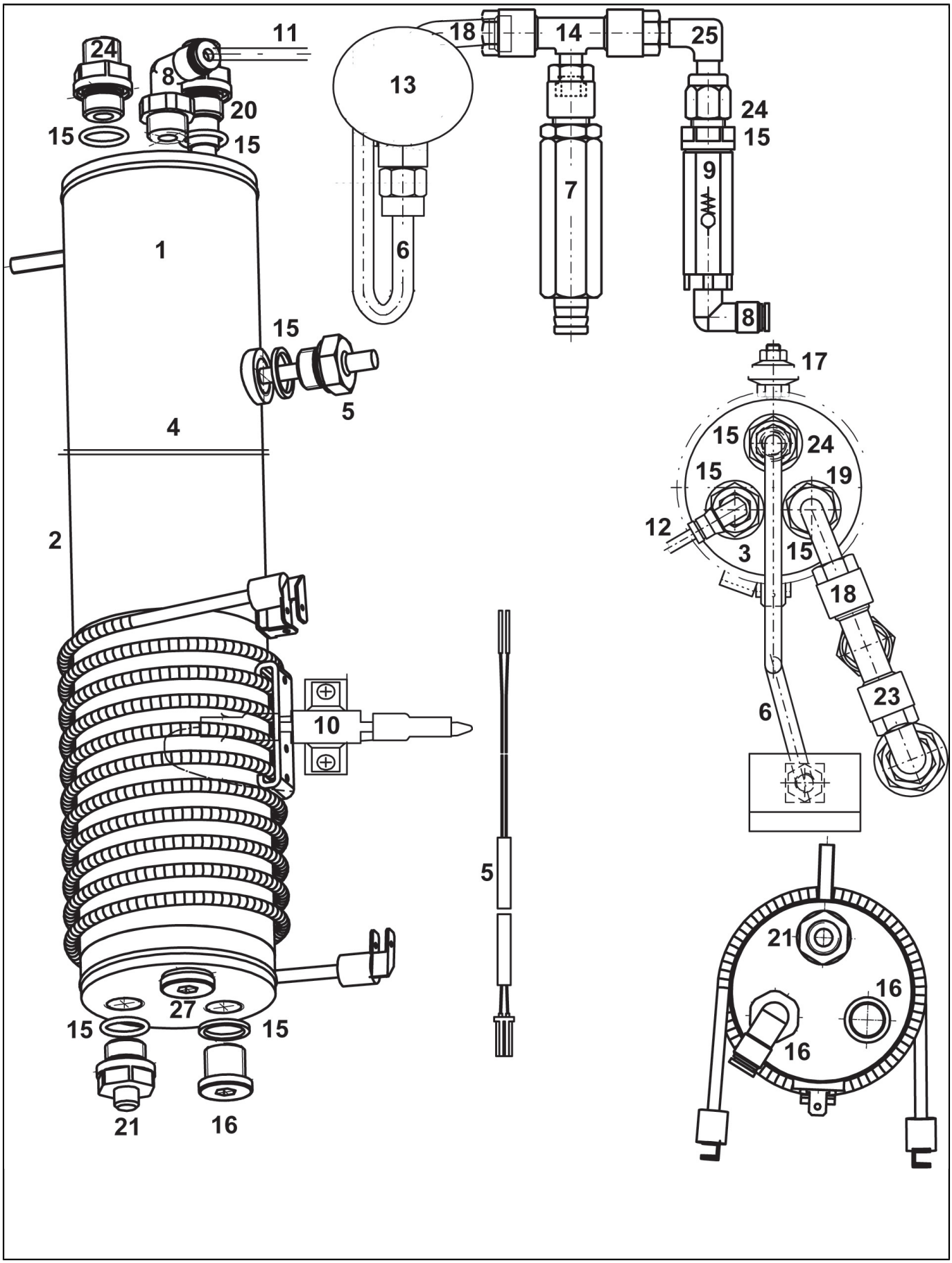

K14091_02

Coffee boiler from 03.2006

POS.	CODE	DESCRIPTION	NOTES
1	00058346	BOILER ASSAY. 3,0 KW / 230 V	
	00060273	BOILER ASSAY. 2,5 KW / 230 V	
2	00045124	BOILER INSULATION 280 X 270 X 3 MM	
3	00045375	ADAPTER NIPPLED. G 1/4 X G 1/8	
4	00039245	SAFETY CLAMP	
5	00058348	TEMPERATURE SENSOR RETROFIT KIT	
	00100243.002	TEMPERATURE SENSOR	
6	00055805	PRESSURE GAUGE WITH CONNECTION ASSAY.	
7	10060605	PRESSURE RELIEF VALVE 12 X G1/4	
8	69200142	ELBOW CONNECTOR G1/4x4 PPSU	
9	00057681	CHECKVALVE	
10	00054915	TEMPERATURE LIMITER 250 C	
	00058836	TEMPERATURE LIMITER 250 C TWIN	
11	38228072	TEFLON HOSE FOP D. 4,0 X 2,5 MM	
12	00028840	THREADED ELBOW, MALE D. 4 X G1/4	
13	00048405	PRESSURE GAUGE 0 - 24 BAR 1/8	
14	00055924	ADJUSTABLE L WITH COMPRESSION CONNECTORG 1/4 X D	
15	00002240	O-RING 14 X 1,78 EPDM 70SH	
	00009917	GASKET 12,5 X 9,8 X 1,2 COPPER	
	00044464	GASKET 16,5 X 13,2 X 1,5 COPPER	
	00054714	GASKET 16,5 X 13,5 X 2,5 COPPER	
16	00044443	THREADED FITTING D. G 1/4X G 1/8	
17	00001521	KEPS NUT M5	
18	00056145	PIPE ELBOW ASSAY.	
19	00055862	THREADED FITTING D. 8 X G 1/4 X M 12 X 1D. 8 X G	
20	00058581	BOILER CONNECTION	
21	00100106.001	THREADED FITTING D. G 1/4 X 8 MM	
23	00045695	COFFEE BOILER INLET ASSAY.	
24	00055864	THREADED FITTING D. 6 X G 1/4 X M 12 X 1	
25	00046140	RETROFIT KIT NON-RETURN VALVE s70	
	00055803	ANGEL WITH COMPRESSION CONNECTOR + NUTG 1/8 X D.	
27	00044443	THREADED FITTING D. G 1/4X G 1/8	

K10539_01

drain Water hose

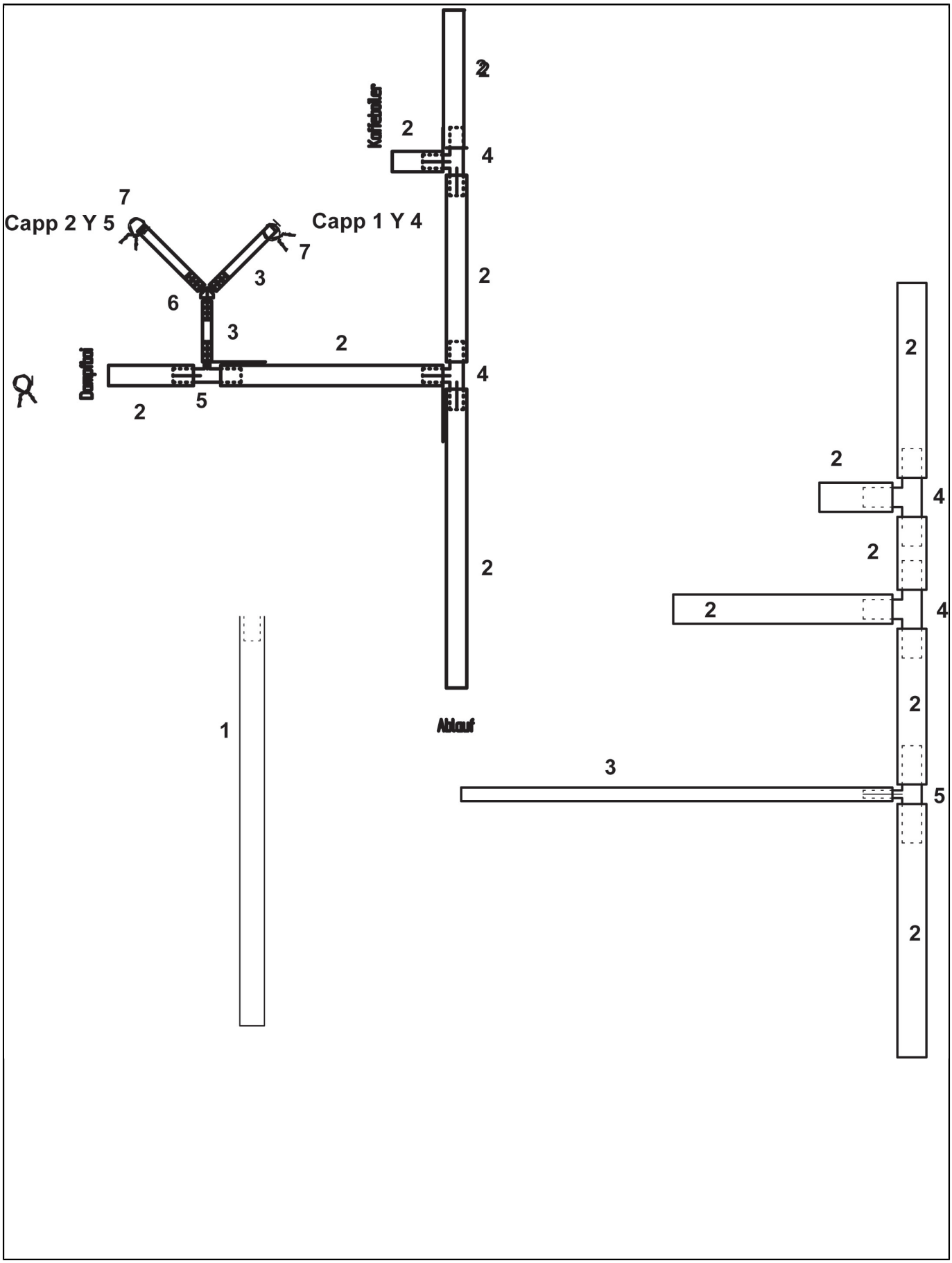

K10539_01

drain Water hose

POS.	CODE	DESCRIPTION	NOTES
1	36901804	DRAIN PIPE 14 X 1500	
2	00004473	SILICON HOSE D. 14 X 9 MM	
3	00004474	SILICON HOSE D. 8 X 5 MM	
4	00034927	T - HOSE CONNECTORD. 12MM	
5	00045714	REDUCING T CONNECTOR D. 12 - 6 - 12 MM	
6	00055748	Y UNIT D. 6 MM	
7	39930008	WIRE HOSE CLAMP 96MM	

K14030_02

Milk line MLR 5 KS 6+7

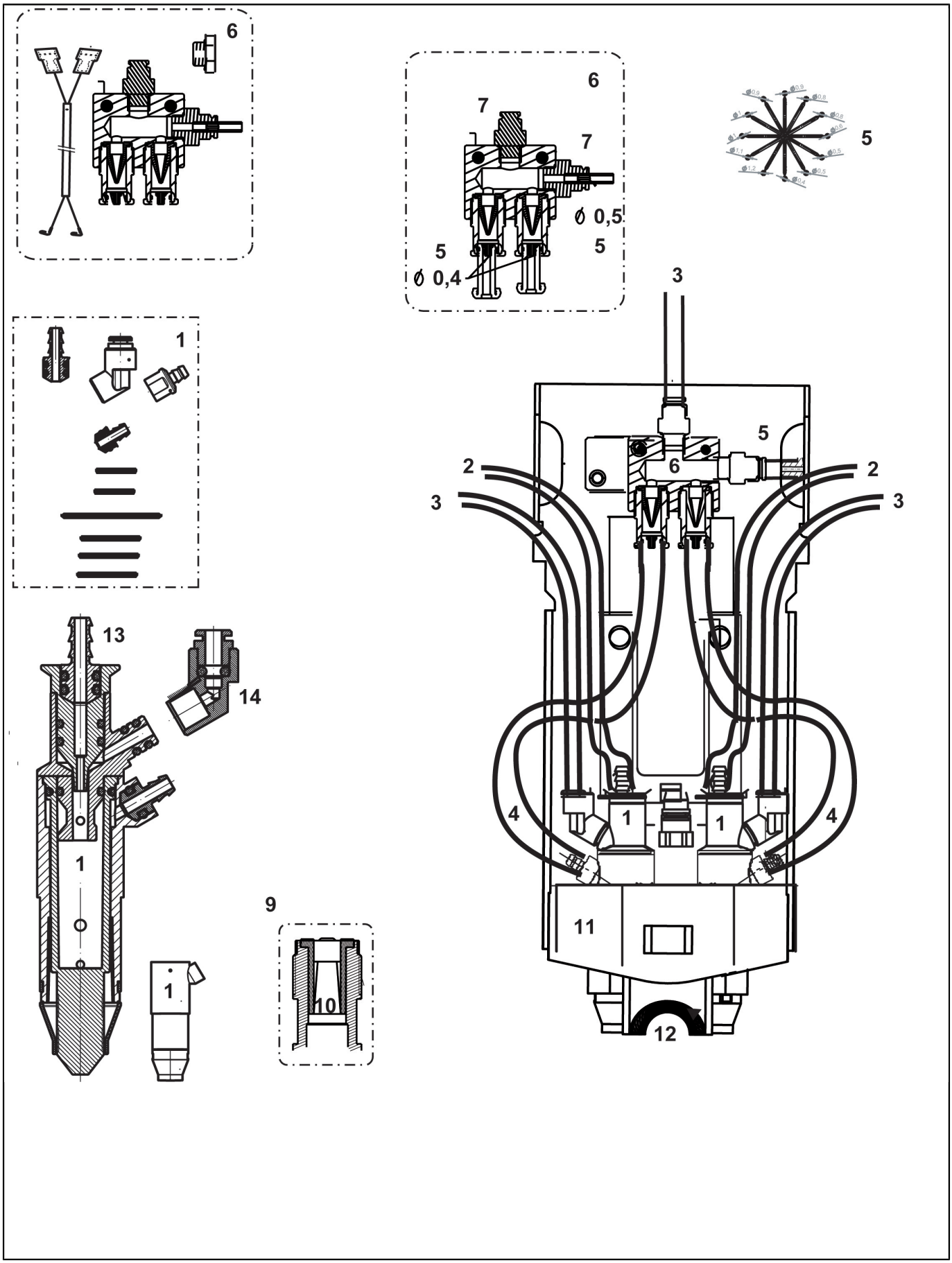

K14030_02

Milk line MLR 5 KS 6+7

POS.	CODE	DESCRIPTION	NOTES
1	00056913	O-RING KIT FROTHER HEAD	
	00100064.001	MIXER KIT	
2	00049037	SILICON HOSE PINK D. 6,0 X 3,0 MM	
3	38228072	TEFLON HOSE FOP D. 4,0 X 2,5 MM	
4	00050010.001	SILICON HOSE D. 6,0 X 3,0 MM	
5	38120127	RESTRICTION RING LITTLE WHITE	
6	10705811	AIR VALVE TOP MILK	
7	69200134	FAST STRAIGHT CONNECTOR G1/8 X 4	
9	38120106	VALVE INSERT DUCKBILL	
10	36230017	DUCKBILL	
11	00047079	COFFEE SPOUT HOUSING	
12	00047078	FLOW CUP STANDARDT	
13	00047077	FLOW CUP SELF	
14	00100042.001	CONNECTOR MILK	

K14092_01

Hot Water boiler from 03.2006

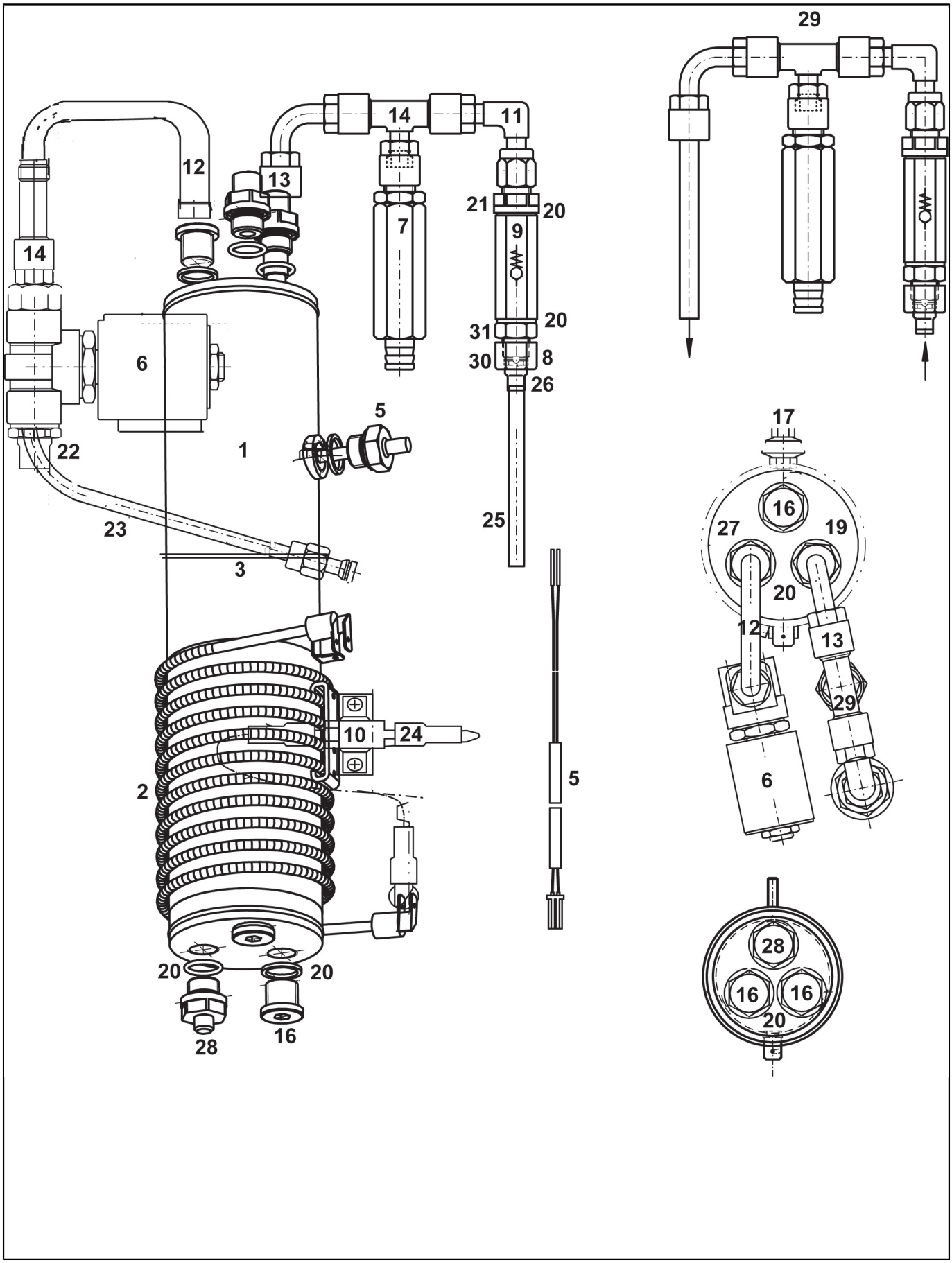

K14092_01

Hot Water boiler from 03.2006

POS.	CODE	DESCRIPTION	NOTES
1	00058349	BOILER ASSAY. 3,0 KW / 230 V	
	00060321	BOILER ASSAY. 2,5 KW / 230 V	
2	00045124	BOILER INSULATION 280 X 270 X 3 MM	
3	00044431	CLIP BOILER INSULATION	
5	00056103	TEMPERATURE SENSOR TF 14	
	00058348	TEMPERATURE SENSOR RETROFIT KIT	
	00100243.002	TEMPERATURE SENSOR	
6	00045688	ELECTROVALVE HOT WATER T	
	00100559.001	OPERATOR KIT 2/2 WAY WATER T30 (ACL)	
	00100560.001	PLUNGER 2/2 WAY WATER T30 (ACL)	
7	10060605	PRESSURE RELIEF VALVE 12 X G1/4	
8	00029221	SCREWS ON CLOWN, STRAIGHT D. 4 X G1/4	
9	00057681	CHECKVALVE	
10	00054915	TEMPERATURE LIMITER 250 C	
	00058836	TEMPERATURE LIMITER 250 C TWIN	
	37122904	SCREW 2.9X4.5	
11	00057975	RETROFIT KIT NON-RETURN VALVE G 1/8	
12	00056144	PIPE ELBOW ASSAY. TEE BOILER	
13	00056760	SUPPLY PIPE ASSAY.	
14	00055924	ADJUSTABLE L WITH COMPRESSION CONNECTORG 1/4 X D	
16	37122904	SCREW 2.9X4.5	
17	00001521	KEPS NUT M5	
19	00100559.001	OPERATOR KIT 2/2 WAY WATER T30 (ACL)	
20	00044464	GASKET 16,5 X 13,2 X 1,5 COPPER	
	00054714	GASKET 16,5 X 13,5 X 2,5 COPPER	
	00100560.001	PLUNGER 2/2 WAY WATER T30 (ACL)	
21	00044464	GASKET 16,5 X 13,2 X 1,5 COPPER	
22	00040517	THREADED MALE CONNECTION STRAIGHTD. 6 X G 1/4	
23	00040743	HOSE CONNECTION ASSAY. STEAM + HOT WATERL = 350 MM	
24	00048057	WIRE BL 140	
25	38228072	TEFLON HOSE FOP D. 4,0 X 2,5 MM	
26	00004715	FLOW LIMITER D. 0,8 MM	
27	00055864	THREADED FITTING D. 6 X G 1/4 X M 12 X 1	
	00058581	BOILER CONNECTION	
28	00100106.001	THREADED FITTING D. G 1/4 X 8 MM	
29	00045696	TEA BOILER INLET ASSAY.	
30	00033303	GASKET 11,2 X 5,2 X 2 COPPER	
31	00011313	DOUBLE NIPPLE D. G 1/4 X G1/4	

K10929_02

Cold Water valve block

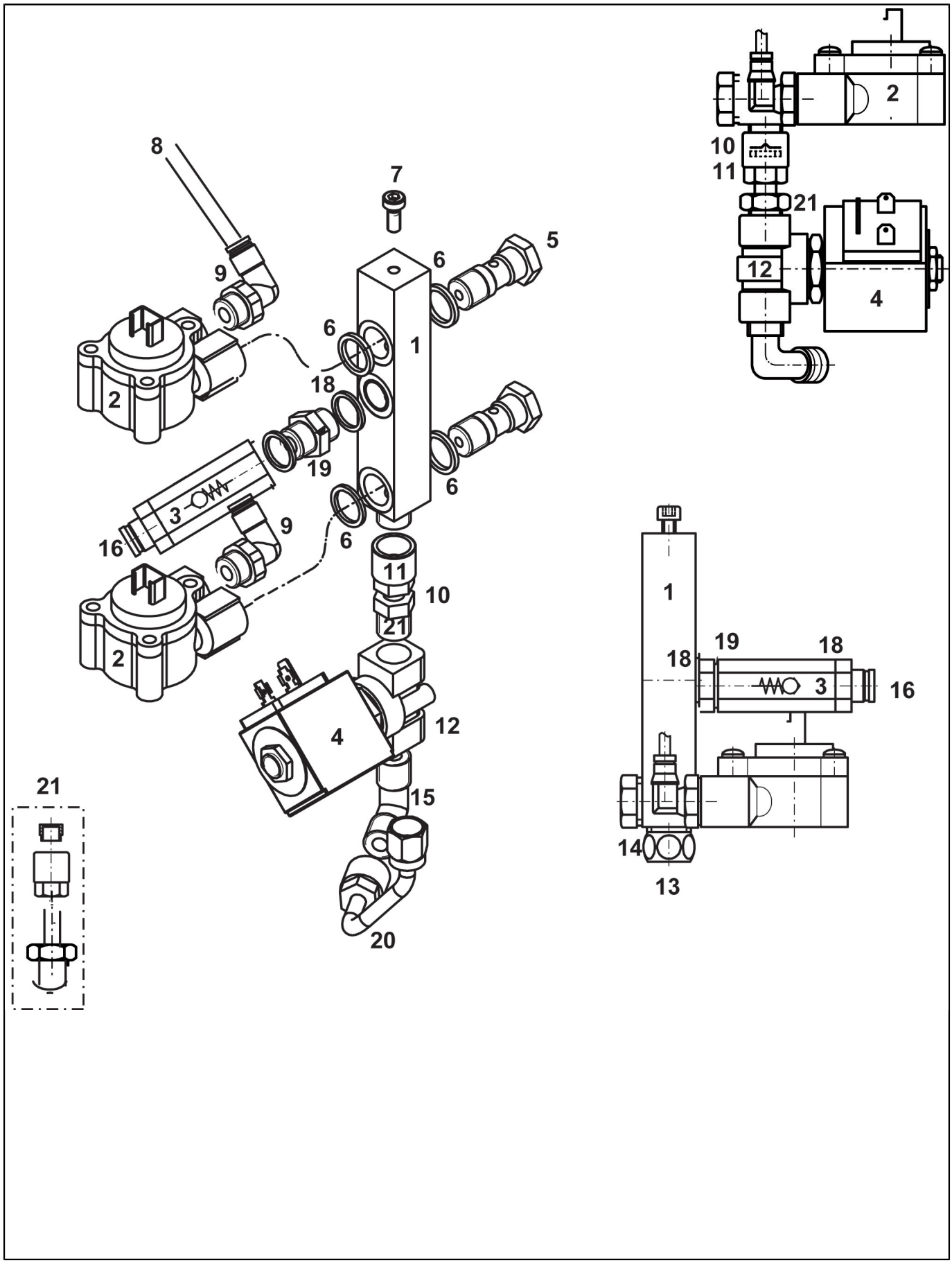

K10929_02

Cold Water valve block

POS.	CODE	DESCRIPTION	NOTES
1	00045699	DISTRIBUTING BLOCK ASSAY.	
	00056120	DISTRIBUTING BLOCK ASSAY. 3 BOILER	
2	00045715	FLOWMETER	
3	00057681	CHECKVALVE	
4	00100558.001	ELECTROVALVE 2/2 WAY WATER T30 (ACL)	
	00100559.001	OPERATOR KIT 2/2 WAY WATER T30 (ACL)	
	00100560.001	PLUNGER 2/2 WAY WATER T30 (ACL)	
5	00039675	HOLLOW SCREW D. G 1/4	
6	00046604	GASKET RING D. 17.5 X 2.0 MM	
7	00000932	HEX SOCKET HEAD SCREW M5 X 12 MM	
8	38228072	TEFLON HOSE FOP D. 4,0 X 2,5 MM	
9	69200142	ELBOW CONNECTOR G1/4x4 PPSU	
10	00004712	FLOW LIMITER D. 0,5 MM	
11	00004105	CONNECTOR NUT D. 8 MM X G 1/4	
	00033303	GASKET 11,2 X 5,2 X 2 COPPER	
12	00045698	ELETROVALVE FULL 8W/24V DC	
13	00018876	LOCKING NUT G 1/4	
14	00010488	GASKET 11,2 X 6,2 X 2 COPPER	
15	00004113	THREADED MALE ELBOW	
16	00100168.001	THREADED MALE NIPPLED. 6 MM X G 1/4	
18	00044464	GASKET 16,5 X 13,2 X 1,5 COPPER	
19	00057682	DOUBLE NIPPLED. G 1/4	
20	00055800	STEAM BOILER, SUPPLY PIPE	
	00056145	PIPE ELBOW ASSAY.	
21	00004104	CLAMPING RING SO 1-8 8 MM	
	00004105	CONNECTOR NUT D. 8 MM X G 1/4	
	00004128	CONNECTION CONICG 1/4 X D. 8MM	
	00061046	THREADED FITTING ASSAY. D. G 1/4 X 8 MM	this is a kit contain: 1 x 00004128, 1x 00004105,1x 0004104 please order them separately, kit not supplied anymore

K10491_01

Hot Water spout

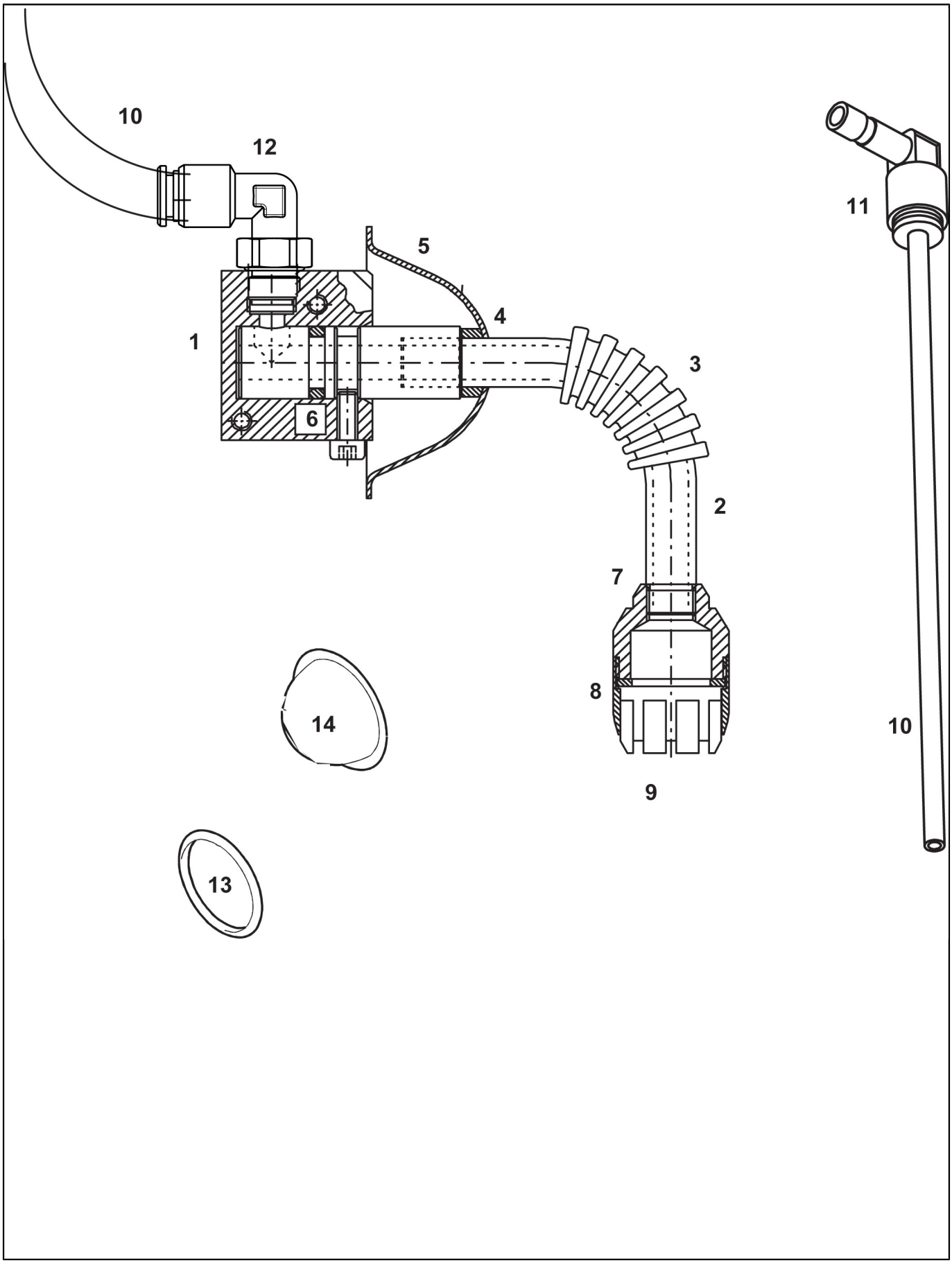

K10491_01

Hot Water spout

POS.	CODE	DESCRIPTION	NOTES
1	00040570	HOT WATER SPOUT ASSAY. (INKL. POS. 2A, 3,4,5,6,7,8	
	00041644	Manifold Assy, Tea	
	00060492	HOT WATER SPOUT ASSAY. RETROFIT KIT	
2	00038731	PIPE ASSAY.L = 52 MM	
	00043734	PIPE ASSAY.L = 107 MM	
3	36990004	RUBBER FOR STEAM PIPES	
4	00032036	GASKET 13 X 9 X 4 RUBBER	
5	00039759	SPHERICAL CAP WITH HOLE	
6	00002218	O-RING 10,77 X 2,62 EPDM 70SH	
7	00002207	O-RING 8 X 1 EPDM	
8	00038649	INTERMEDIARY ADAPTER HOT WATER	
9	00041149	NEOPERL MIXING NOZZLEM22 X 1,0 MM	
10	38228073	TEFLON HOSE FOP D. 6 X 4 MM	
11	00060076	PLUG IN ELBOW CONNECTOR 6X4	
12	69200140	ELBOW CONNECTOR G1/8x6 PPSU	
13	00002328	O-RING 47,22 X 3,53 EPDM 70SH	
14	00039757	SPHERICAL CAP WITH HOLE	

K14050_03

Spindle Motor NBUP from 03.2012

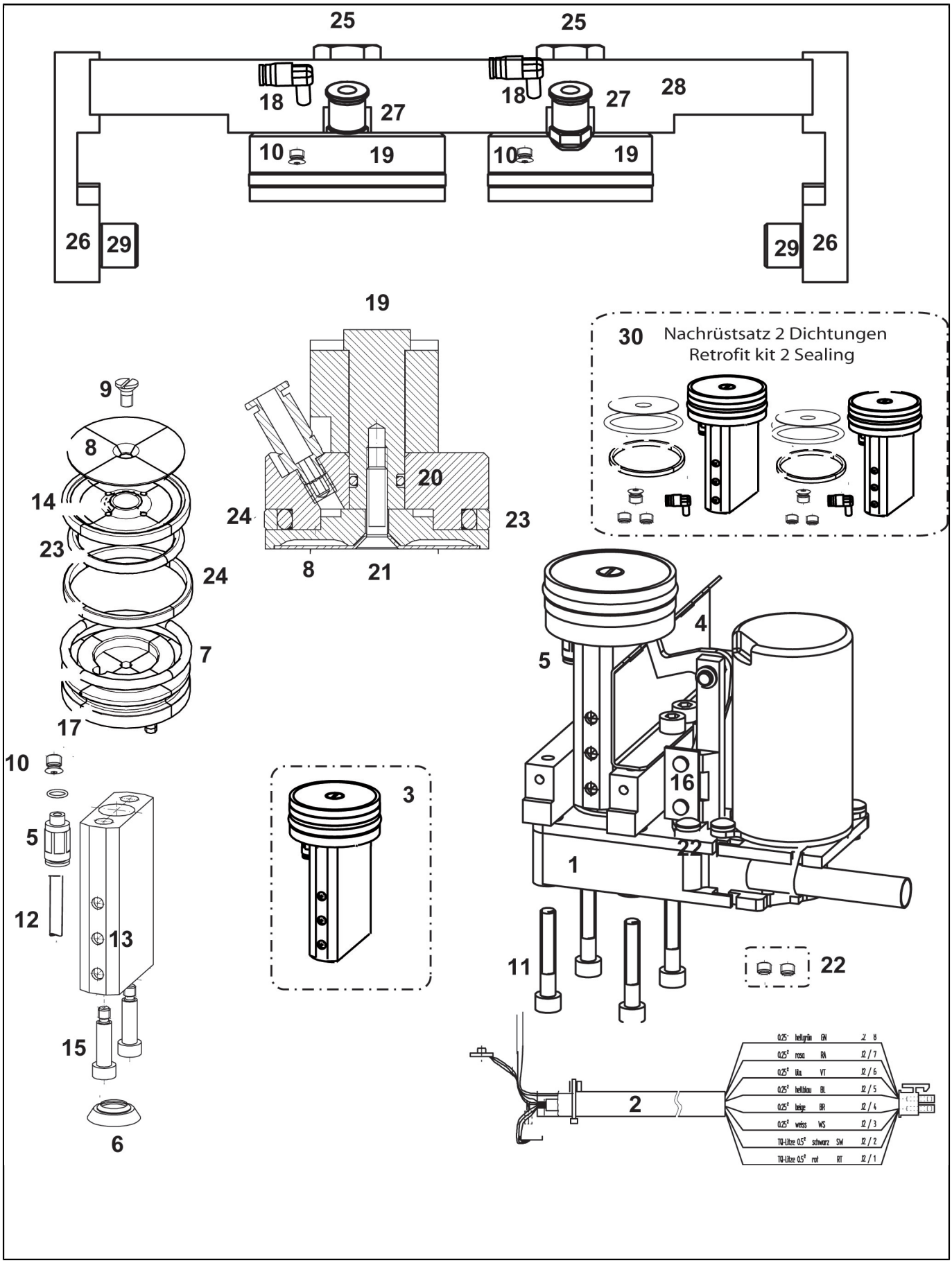

K14050_03

Spindle Motor NBUP from 03.2012

POS.	CODE	DESCRIPTION	NOTES
1	34010009	SPINDLE MOTOR 24V 61 MM	
2	00053602	SPINDLE-MOTOR WIRING WITH HALL SENSOR	
3	00055389	PISTON ASSAY. BOTTOM (PEEK) D. 44 MM	
	00056077	BREWING PISTON D. 44 MM (PEEK)	
	00056090	PISTON ASSAY. BOTTOM (PEEK) D. 37 MM	
	00100510.001	LOWER BREWING PISTON NBUP D. 44,0MM	
	10705826	LOWER PISTON D. 37	
4	00038869	PISTON GUIDE PLATE	
5	00060283	O-RING 4 X 1,2 F	
	69200133	FAST STRAIGHT CONNECTOR M5	
6	00047905	GASKET RING D. 16 X 4.5 MM NBR	
7	00100506.001	O-RING 36,09 X 3,53 SILICONE 70SH	
	00100507.001	O-RING 29,75 X 3,53 TS 70 SH	
8	00060115	BREWING SIEVE D. 37 MM	
	00060116	BREWING SIEVE D. 44 MM	
9	00001176	COUNTERSUNK SCREW M4 X 12 MM	
10	00039750	FLOW LIMITER	
	00048550	FLOW LIMITER D. 0.7MM	
11	00000935	HEX SOCKET HEAD SCREW M5 X 30 MM	
12	38228072	TEFLON HOSE FOP D. 4,0 X 2,5 MM	
13	10701050	PISTON SHAFT WITH MAGNET	
14	00054861	FILTER CARRIER	
	00054863	FILTER SUPPORT D.37	
	00054863	FILTER SUPPORT D.37	
15	00048548	HEX SOCKET HEAD SCREW FOR PEEK PISTONM4 X 15 MM	
16	00001076	CROSSED RAISED CHEESE HEAD SCREW M4 X 12 MM	
17	36930110	LOWER PISTON GR. BC18	
	38120129	LOWER PISTON D. 37 S70	
18	69200089	FAST CONNECTION HOSE D.4	
19	00046956	PISTON ABOVE D. 37 MM	
	00046957	PISTON ABOVE D. 44 MM	
20	36404007	O-RING 7,65 X 1,78 EPDM 2031	
21	00001177	COUNTERSUNK SCREW M4 X 16 MM	
22	23000197	WASHER GR S70	
23	00100135.001	O-RING 24,99 X 3,53 SILICONE	
	00100136.001	O-RING 31,35 X 3,53 SILICONE RED	
24	00039063	TURCON RING 26 X 37 X 4,2	
	00039064	TURCON RING 32 X 44 X 4,2	
25	00054868	GUDGEON PIN	
26	00038785	COMPLETE GUIDE	
27	69200133	FAST STRAIGHT CONNECTOR M5	
28	00055720	YOKE ASSAY.	
29	00038778	SPACERS ROLL	
30	10705959	KIT RETROFIT NBUP S70	

K11749_02

Steam valve block MLR 5

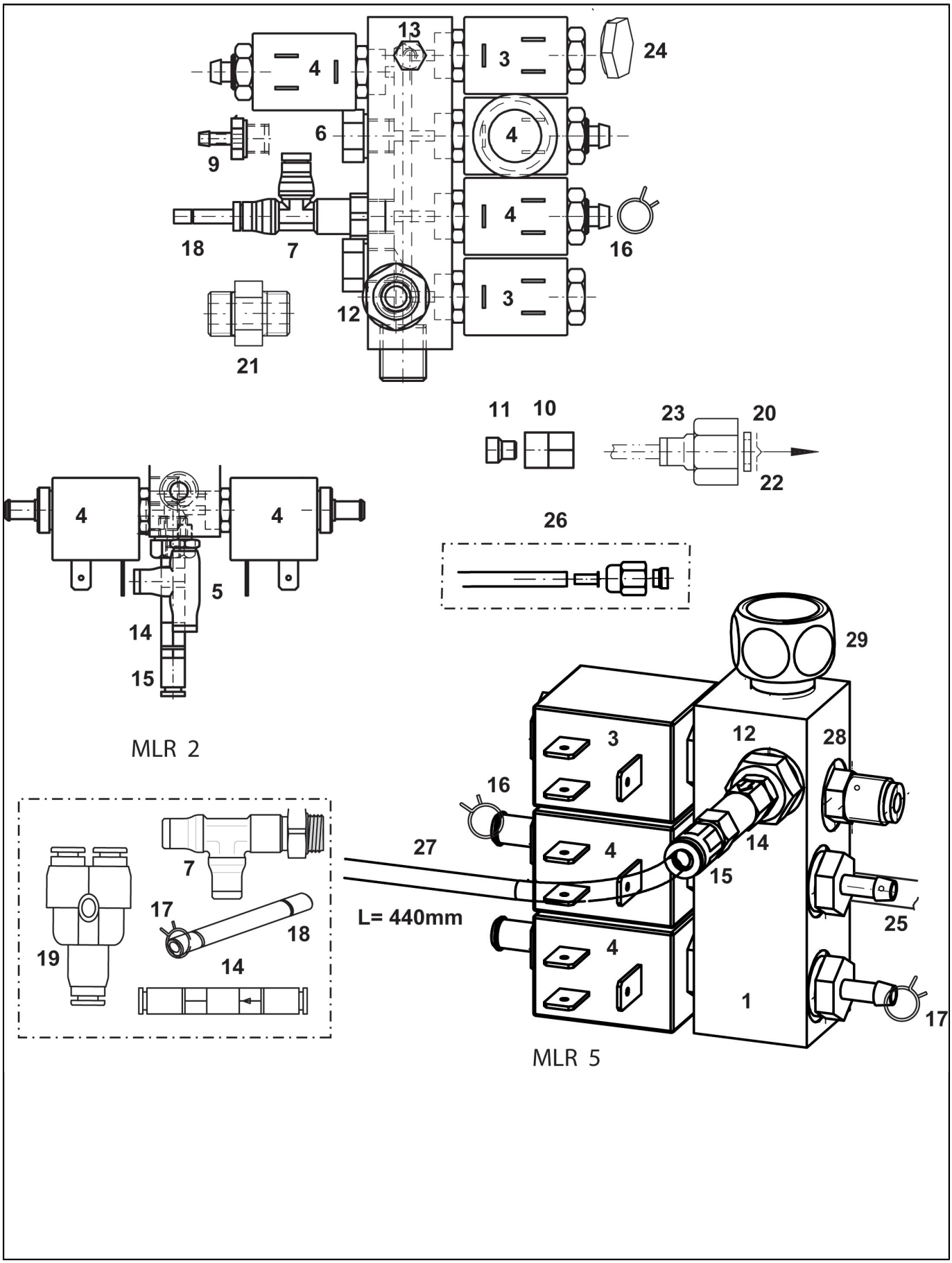

K11749_02

Steam valve block MLR 5

POS.	CODE	DESCRIPTION	NOTES
1	00100356.001	VALVE BLOCK ASSAY. (ACL WITH MLR 2)	
	00100361.001	VALVE BLOCK ASSAY. MLR 5	
3	34049006	PLUNGER 2/2 WAY WATER T22 (ACL)	
	34049007	OPERATOR KIT 2/2 WAY WATER (ACL) T22	
4	00100830.005	OPERATOR KIT 3/2 WAYS STEAM (ACL) T22	
	00100832.005	PLUNGER 3/2 WAY STEAM T22 (ACL)	
5	00029568	MALE ELBOW CONNECTOR D. 4 MM X M5	
6	23000299	CAP G1/8 BOILER ONE/ZERO	
7	00055975	L-CONNECTION D. 4 MM X G 1/8	
9	00009917	GASKET 12,5 X 9,8 X 1,2 COPPER	
	00009917	GASKET 12,5 X 9,8 X 1,2 COPPER	
	00049966	THREADED MALE NIPPLE WITH WASHER G 1/8	
10	00004101	CONNECTOR NUT D. 6 MM X G 1/8	
11	00056038	BLIND TAP D. 6MM	
12	00049333	LOCKING CAP G 1/8 X M 5	
13	00054994	LOCKING SCREW M5 X 4 MM	
14	00048820	NON-RETURN VALVE M5	
15	00100046.002	THREADED MALE NIPPLE D. 4 X M5	
16	39930008	WIRE HOSE CLAMP 96MM	
17	39930001	WIRE HOSE CLAMP 68MM	
18	00055974	DOUBLE PLUG-IN NIPPLE D. 4 MM	
19	00054344	Y-CONNECTION D. 4 MM	
20	00004713	FLOW LIMITER D. 0,6 MM	
21	00059133	O-RING 11,11 X 1.78 FKM 70SH	
	00101036.001	LOCKING SCREW WITH O-RING	
22	00010488	GASKET 11,2 X 6,2 X 2 COPPER	
23	00029221	SCREWS ON CLOWN, STRAIGHT D. 4 X G1/4	
24	36404054	O-RING 12,42 X 1,78 V 70SH 2050	
	69200134	FAST STRAIGHT CONNECTOR G1/8 X 4	
25	00009917	GASKET 12,5 X 9,8 X 1,2 COPPER	
	23000299	CAP G1/8 BOILER ONE/ZERO	
26	00004101	CONNECTOR NUT D. 6 MM X G 1/8	
	00004104	CLAMPING RING SO 1-8 8 MM	
	00004107	SUPPORTING SLEEVED. 4 MM	
27	38228072	TEFLON HOSE FOP D. 4,0 X 2,5 MM	
28	69200134	FAST STRAIGHT CONNECTOR G1/8 X 4	
29	00019974	GASKET 14,8 X 9 X 2 COPPER	
	00027170	UNION NUT G3/8 X 13,5MM	

K14090_01

Boiler group

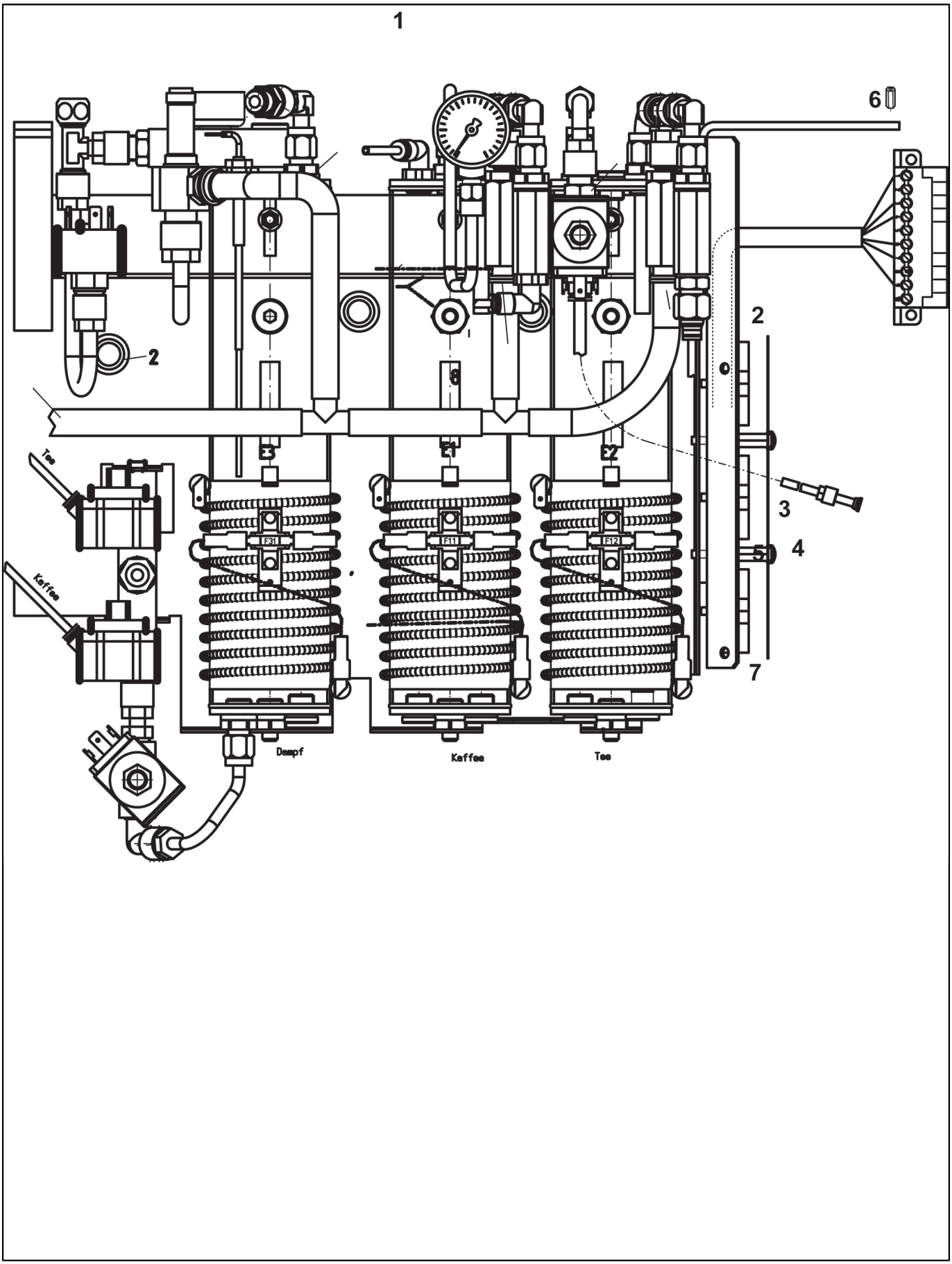

K14090_01

Boiler group

POS.	CODE	DESCRIPTION	NOTES
1	00058942	BOILER GROUP ASSAY. 3 KW FROM 03.06	
	00058943	BOILER GROUP ASSAY. 3 KW (2BOILER) COFFEE + TEE	
	00058944	BOILER GROUP ASSAY. 3 KW (2BOILER) COFFEE + STEAM	
	00060322	BOILER GROUP ASSAY. 2,5 KW	
2	34200353	RELE SSR 24-600VAC/35A	
3	00040447	INSULATION 0.35 MM MYLAR POLYESTER	
4	37030408	SCREW M 4 X 8	
6	00041707	Nut spacers M5 x 22 mm	
7	00040598	RESISTANCEOR COMPL.	

K10470_03

Water pump without MLR

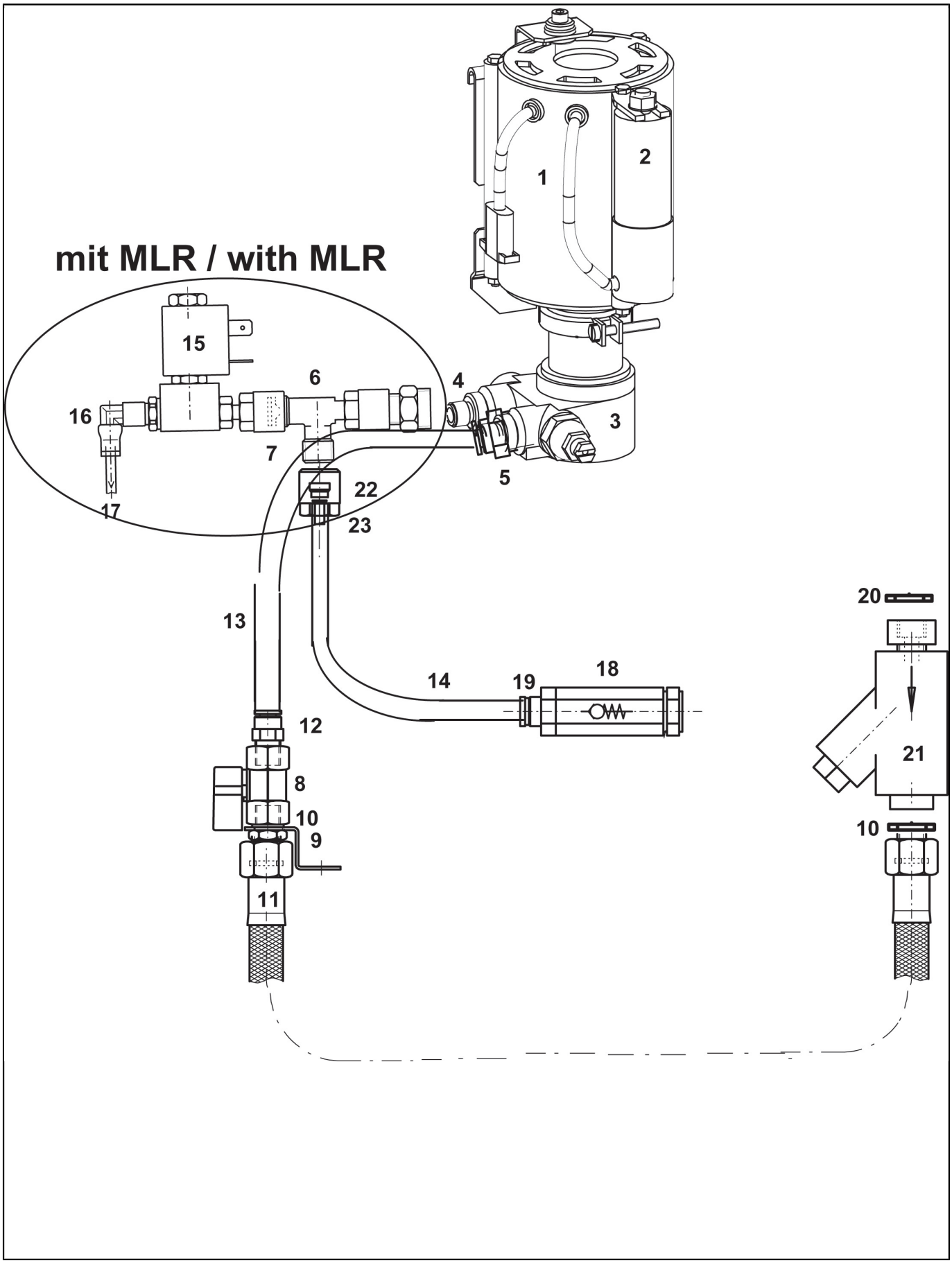

K10470_03

Water pump without MLR

POS.	CODE	DESCRIPTION	NOTES
1	00041253	MOTOR TO PUMP ASSAY. 230 V 50 HZ	
	00043215	MOTOR TO PUMP ASSAY. JAPAN 200V - 50/60HZ	
2	00042324	CAPACITOR ASSAY. 7.0 MF 200V	
	34020017	CONDENSER 6,3 MF.LT	
3	69000288	PUMP VM 100L/H ONE	
4	00041493	THREADED MALE NIPPLE D. R 3/8 X G 1/4	
5	69200138	STRAIGHT CONNECTOR G3/8 X 8	
6	00060490	ADJUSTABLE T WITH COMPRESSION CONNECTORG 1/4 X D	
7	00004713	FLOW LIMITER D. 0,6 MM	
	00033303	GASKET 11,2 X 5,2 X 2 COPPER	
8	10705719	TAP+JOINT S90	
9	23000288	DOUBLE NIPPLE G3/8 X G1/4	
10	00019974	GASKET 14,8 X 9 X 2 COPPER	
11	69000737	FLEX PIPE MM1500 NSF F3/8-F3/8 CHECK VALVE	
12	69200137	STRAIGHT NIPPLE M8 X G1/4	
13	38228074	TEFLON HOSE FEP D. 8 X 6 MM	
14	00058882	CONNECTION HOSE ASSAY D. 6 X 4 MM	
15	00101096.001	2 WAY SOLENOID (VALVE) WATER (ACL) T22	
	34049006	PLUNGER 2/2 WAY WATER T22 (ACL)	
	34049007	OPERATOR KIT 2/2 WAY WATER (ACL) T22	
16	00028840	THREADED ELBOW, MALE D. 4 X G1/4	
17	38228071	TEFLON HOSE FEP D. 4 X 2 MM	
18	00057681	CHECKVALVE	
19	00100168.001	THREADED MALE NIPPLED. 6 MM X G 1/4	
20	00002752	FLAT SEAL 18 X 13,5 X 2	
21	00046902	WATER FILTER ASSAY.	
22	00004129	CLAMPING RING 10,0 MM	
23	00004130	NUT 10,0 MM / G 3/8"	

K14040_01

Brewing group

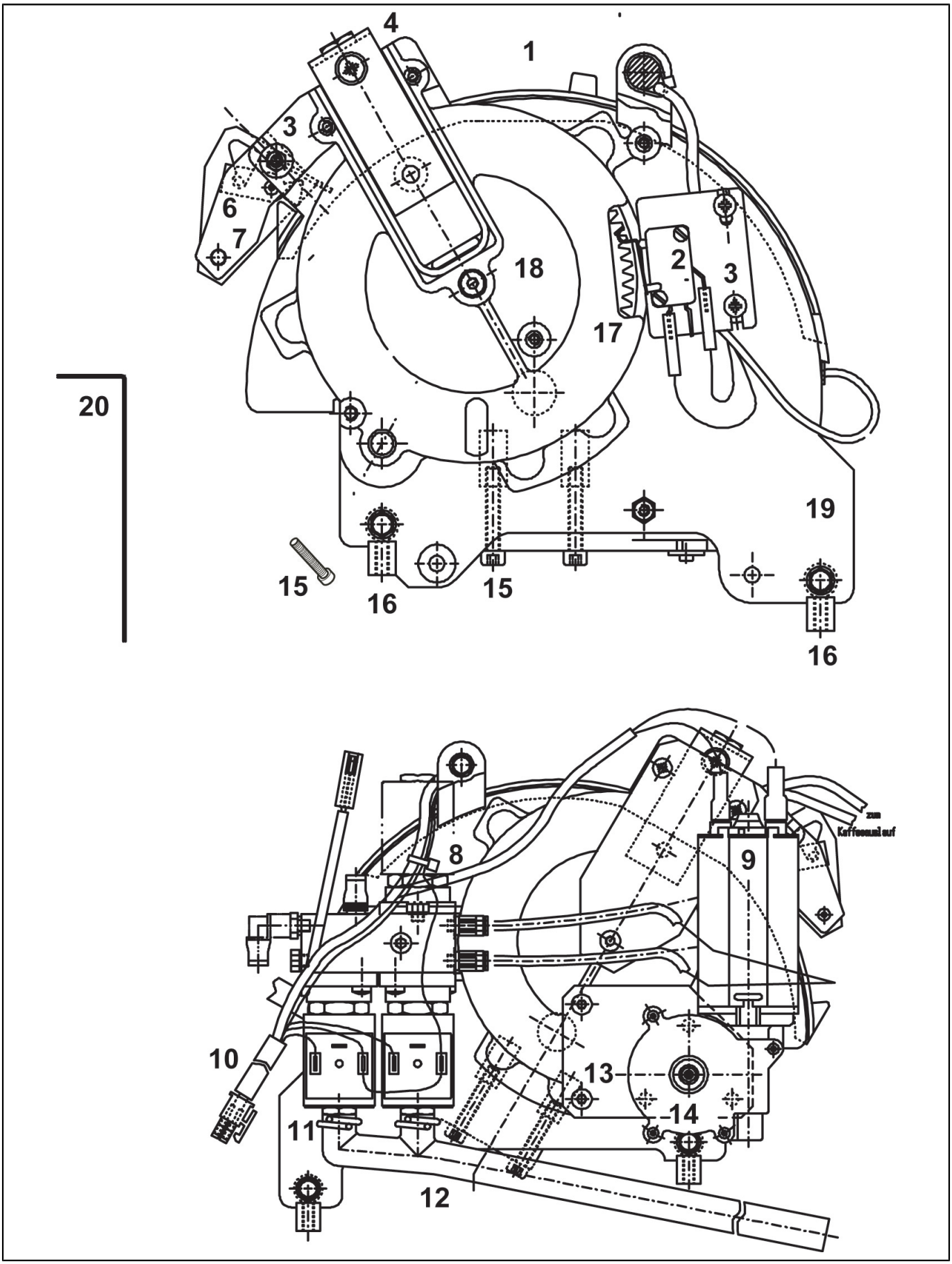

K14040_01

Brewing group

POS.	CODE	DESCRIPTION	NOTES
1	00055725	BREWING GROUP ASSAY. 7111 - 77113 / 7211 - 7214	
	00055726	BREWING GROUP ASSAY. SLEF	
2	00039088	MICRO SWITCH	
3	37030408	SCREW M 4 X 8	
4	00041653	GUIDING TAPE 5,0/2,5 X 180 MM TURCON L	
6	00041260	STRIPPER ASSAY.	
	00044381	ROCKER	
7	00001518	KEPS NUT M4	
8	34200071	FIXING CABLE CLAMP	
9	00100089.001	GEAR MOTOR	
10	00040915	CABLE HARNESS J 10	
11	00004491	HOSE CLAMP D. 8,0 MM	
12	00039135	RELIEF DRAIN HOSE	
13	00000932	HEX SOCKET HEAD SCREW M5 X 12 MM	
14	00041506	6-EDGE HEX SCREW M5 X 12 MM	
15	00029575	RAISED CHEESE HEAD SCREWM5 X 14 MM	
	00038761		
	00040956	CROSSED RAISED CHEESE HEAD SCREW M4 X 35 MM	
16	00039879	RAIL	
17	00039138	CURVE WHEEL	
18	00039090	DRIVE SHAFT	
19	00039331	SIDE PANEL LEFT ASSAY. REAR	
	00039332	SIDE PANEL LEFT ASSAY. FRONT	
20	00039868	COVERPLATE	

K14040_02

Brewing group valve

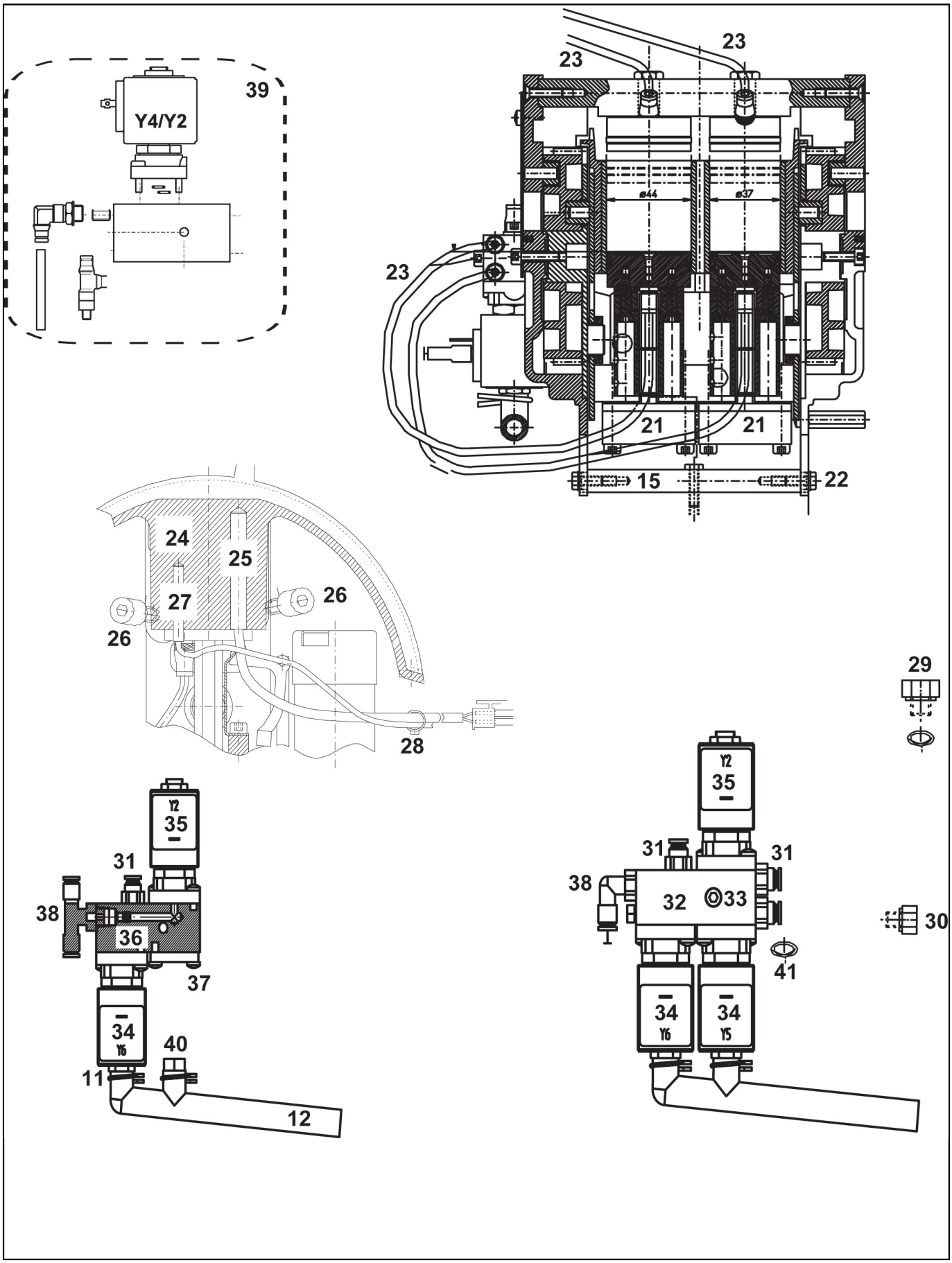

K14040_02

Brewing group valve

POS.	CODE	DESCRIPTION	NOTES
11	00004491	HOSE CLAMP D. 8,0 MM	
12	00039135	RELIEF DRAIN HOSE	
15	00038781	SPACER PIN	
21	10705939	SPINDLE MOTOR+PLATE ONE L61	
	34010009	SPINDLE MOTOR 24V 61 MM	
22	00041506	6-EDGE HEX SCREW M5 X 12 MM	
23	38228071	TEFLON HOSE FEP D. 4 X 2 MM	
24	00040609	BREWING BLOCK	
25	00056103	TEMPERATURE SENSOR TF 14	
	50000004	LUBRICANT COMPOUND KG.0.200	
26	00001722	6-EDGE HEX SCREW M4 X 16 MM	
27	00040611	HEATING CARTRIDGE ASSAY. 100W / 230V	
28	34200071	FIXING CABLE CLAMP	
29	00009915	GASKET 7,52 X 5,2 X 0,8 COPPER	
	00054994	LOCKING SCREW M5 X 4 MM	
30	00041132	HEX SOCKET HEAD SCREW M5 X 55 MM	
31	69200134	FAST STRAIGHT CONNECTOR G1/8 X 4	
32	00055715	BREWING VALVE BLOCK ASSAY. 7621 - 7113 / 70XXP11	
	00055717	BREWING VALVE BLOCK ASSAY. 70XXP15 - 70XXP17	
33	00041132	HEX SOCKET HEAD SCREW M5 X 55 MM	
34	00054048	ELECTOVALVE FLANGE 3 WAY (ACL) 2.0 MM	
	00100147.001	OPERATOR KIT 3/2 WAY WATER T30 (ACL)	
	00100149.001	PLUNGER 3/2 WAY WATER T30 (ACL)	
35	00054046	ELECTROVALVE 2/2 WAY FULL (ACL) 2.0 MM T3	
	00100559.001	OPERATOR KIT 2/2 WAY WATER T30 (ACL)	
	00100560.001	PLUNGER 2/2 WAY WATER T30 (ACL)	
36	00048153	FLOW LIMITER D. 1,1MM	
37	00001074	CROSSED RAISED CHEESE HEAD SCREW M4 X 10 MM	
38	00053755	THREADED INSERT MALE T D. 4 MM X G1/8	
	69200139	ELBOW CONNECTOR G1/8x4 PPSU	
39	00046312	RETROFIT KIT BYPASS 70 SERIES	
40	23000299	CAP G1/8 BOILER ONE/ZERO	
41	00041132	HEX SOCKET HEAD SCREW M5 X 55 MM	
	36402001	O-RING 6,07 X 1,78 EPDM 105	

K14093_03

Steam boiler from 03.2006

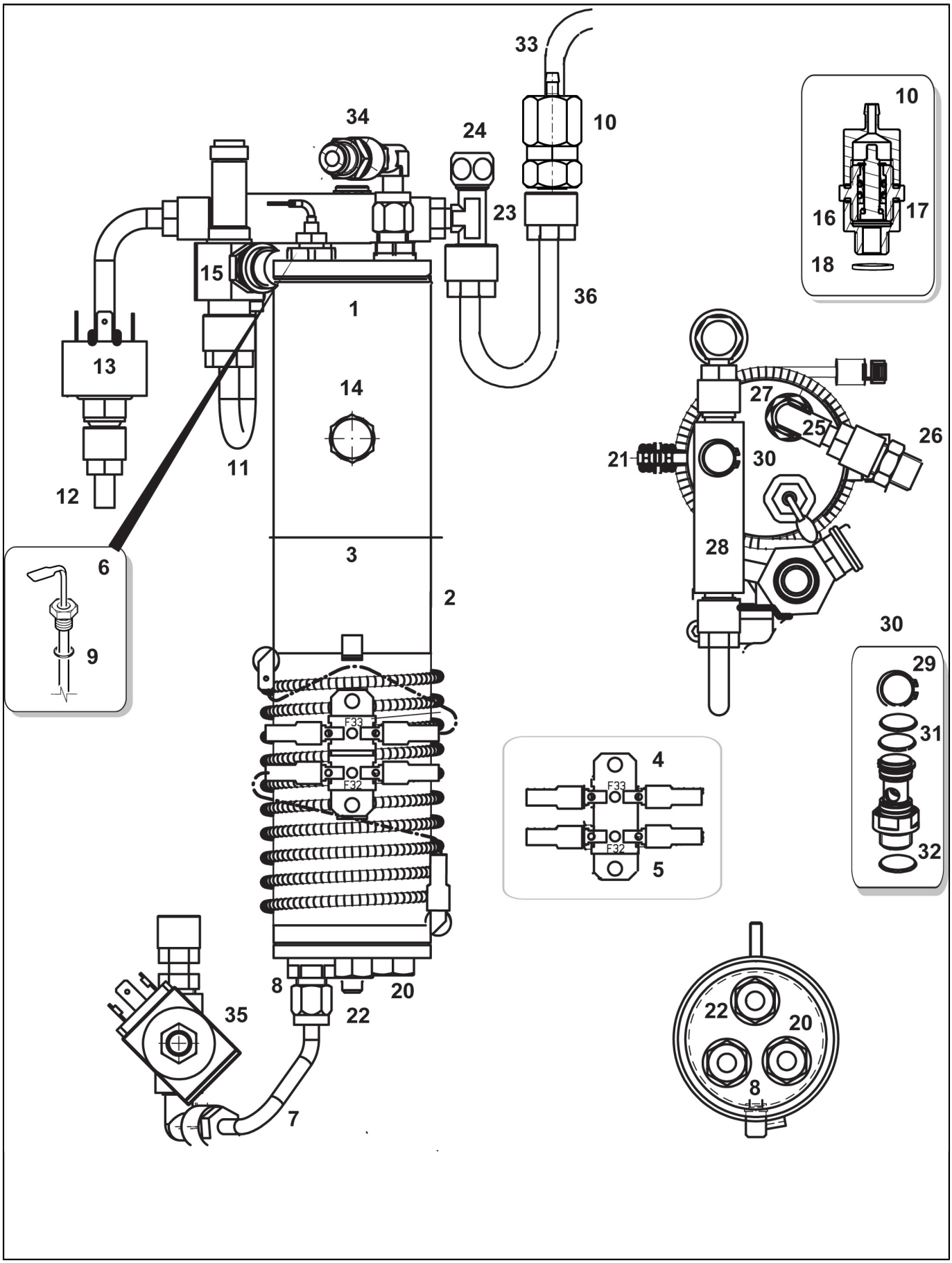

K14093_03

Steam boiler from 03.2006

POS.	CODE	DESCRIPTION	NOTES
1	00058350	BOILER ASSAY. 3,0 KW / 230 V	
	00060272	BOILER ASSAY. 2,5 KW / 230 V	
2	00045124	BOILER INSULATION 280 X 270 X 3 MM	
3	00044431	CLIP BOILER INSULATION	
4	00058836	TEMPERATURE LIMITER 250 C TWIN	
5	37122904	SCREW 2.9X4.5	
6	00100268.002	LEVEL SENSOR 140 MM WITH GASKETG1/4	
7	00055800	STEAM BOILER, SUPPLY PIPE	
	00056145	PIPE ELBOW ASSAY.	
8	00055864	THREADED FITTING D. 6 X G 1/4 X M 12 X 1	
9	00054714	GASKET 16,5 X 13,5 X 2,5 COPPER	
10	10060058	ANTIVACUUM VALVE ONE	
11	00010488	GASKET 11,2 X 6,2 X 2 COPPER	
	00056322	PIPE ELBOW ASSAY.	
12	00100280.001	PIPE ELBOW ASSAY.	
13	00100290.001	PRESSURE SWITCH 1,5 BAR	
14	00044443	THREADED FITTING D. G 1/4X G 1/8	
	00044464	GASKET 16,5 X 13,2 X 1,5 COPPER	
15	00039067	RELIEF VALVE, STEAM	
	00045682	SPLASH GUARD-HOSE D. 16,0 X 45,0 MM	
16	36404013	O-RING SILICONE 2031	
	36404053	O-RING 5,28 X 1,78 EPDM	
17	36220009	GASKET NUT NOTE TEFLON	
18	00044464	GASKET 16,5 X 13,2 X 1,5 COPPER	
20	00002240	O-RING 14 X 1,78 EPDM 70SH	
	00044443	THREADED FITTING D. G 1/4X G 1/8	
21	00001521	KEPS NUT M5	
	00001522	KEPS NUT M6	
22	00100106.001	THREADED FITTING D. G 1/4 X 8 MM	
23	00055924	ADJUSTABLE L WITH COMPRESSION CONNECTORG 1/4 X D	
24	00018876	LOCKING NUT G 1/4	
	00033303	GASKET 11,2 X 5,2 X 2 COPPER	
25	00056145	PIPE ELBOW ASSAY.	
26	00010488	GASKET 11,2 X 6,2 X 2 COPPER	
27	00056805	HOLLOW SCREW	
28	00100188.001	STEAM DISTRIBUTOR	
29	00100186.013	CIRCLIP	
30	00100272.001	HOLLOW SCREW	
31	00100185.001	O-RING 10.1 X 1.78 EPDM	
32	00002240	O-RING 14 X 1,78 EPDM 70SH	
33	00048474	SILICON HOSE D. 7 X 4 MM	
34	69200141	ELBOW CONNECTOR G1/4X6 PPSU	
35	00100558.001	ELECTROVALVE 2/2 WAY WATER T30 (ACL)	
	00100559.001	OPERATOR KIT 2/2 WAY WATER T30 (ACL)	
	00100560.001	PLUNGER 2/2 WAY WATER T30 (ACL)	
36	10705534	MECHANIC SWITCH PIPE S50	

K10840_01

Steam spout

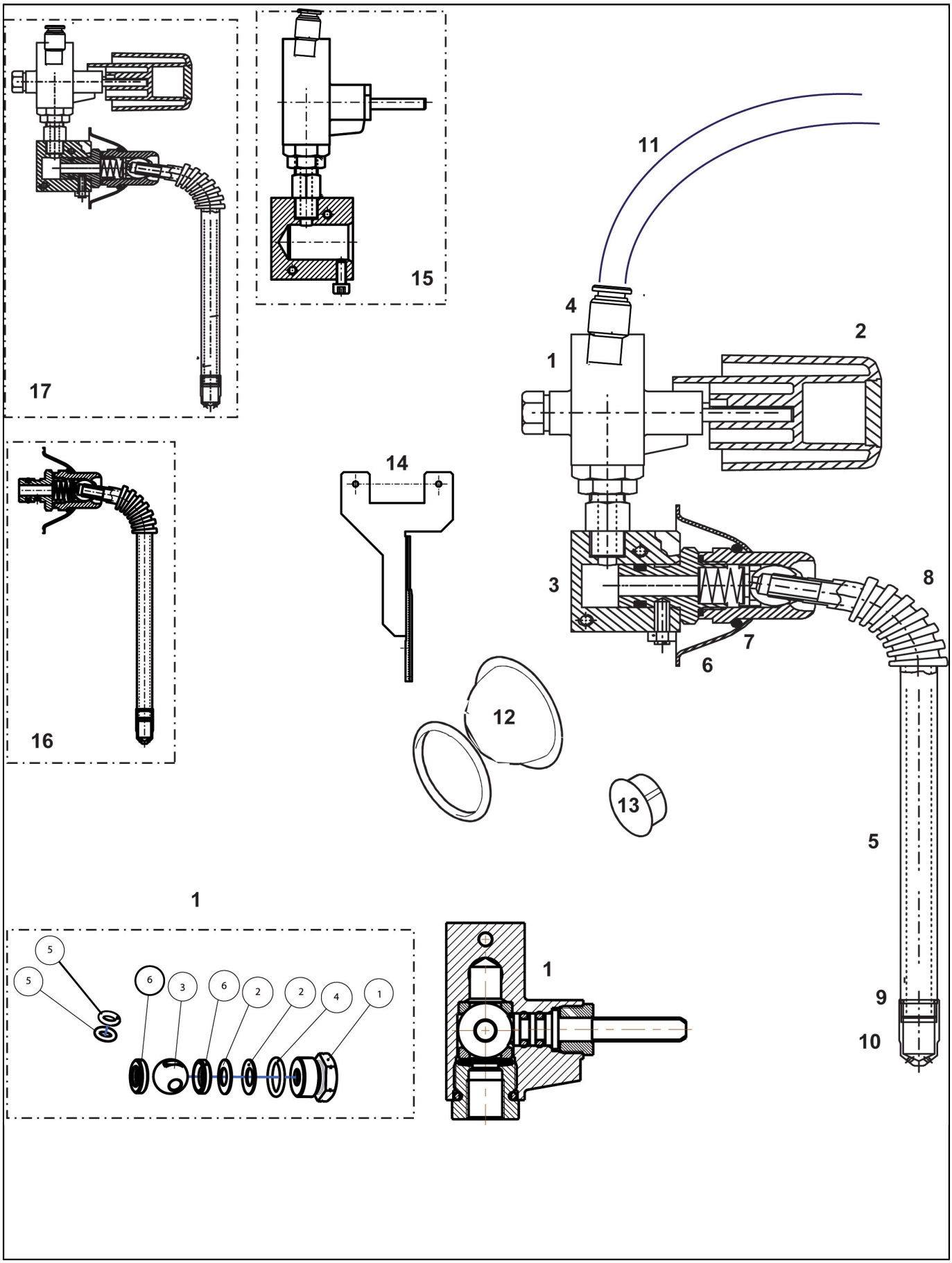

K10840_01

Steam spout

POS.	CODE	DESCRIPTION	NOTES
1	00046366	STEAM TAP	
	00046603	REPAIR KIT TO STAM TAP	
2	00043408	PLATE SPRING (HANDLE)	
	00054306	HANDLE ASSAY.	
3	00002218	O-RING 10,77 X 2,62 EPDM 70SH	
	00041644	Manifold Assy, Tea	
4	69200140	ELBOW CONNECTOR G1/8x6 PPSU	
5	00043549	Pipe Steam Outlet Arco	
	00056948	REPAIR OUTLET TUBEL = 157 MM	
6	00043462	SPHERICAL CAP	
7	00017162	O-RING 21,82 X 3,53 NBR 70SH	
8	36990004	RUBBER FOR STEAM PIPES	
9	00002207	O-RING 8 X 1 EPDM	
10	00038653	STEAM NOZZLE	
11	38228073	TEFLON HOSE FOP D. 6 X 4 MM	
12	00002328	O-RING 47,22 X 3,53 EPDM 70SH	
	00039757	SPHERICAL CAP WITH HOLE	
13	38221015	CAP D. 28 BLACK	
14	00039749	HOLDER	
	36990004	RUBBER FOR STEAM PIPES	
15	00043666	VALVE BLOCK ASSAY. STEAM	
16	00048417	STEAM OUTLET ARCO CPL. SLEWABLE	
17	00060604	STEAM SPOUT ASSAY. RETROFIT KIT SERIE 70	

K14030_01

Milk line MLR 1+2 KB

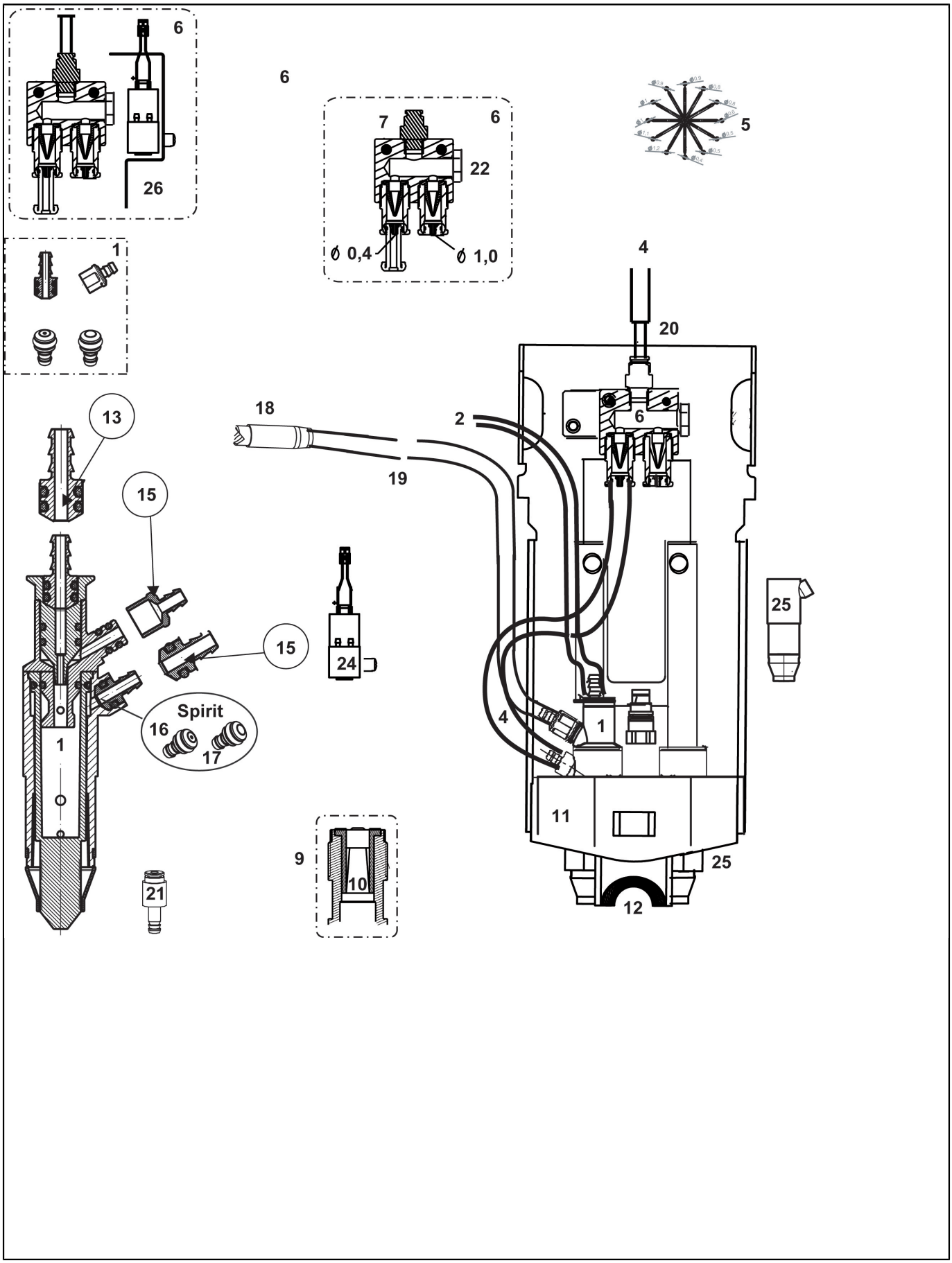

K14030_01

Milk line MLR 1+2 KB

POS.	CODE	DESCRIPTION	NOTES
1	00100064.001	MIXER KIT	
2	00049037	SILICON HOSE PINK D. 6,0 X 3,0 MM	
4	00050010.001	SILICON HOSE D. 6,0 X 3,0 MM	
5	38120127	RESTRICTION RING LITTLE WHITE	
6	00060332		
7	69200134	FAST STRAIGHT CONNECTOR G1/8 X 4	
9	38120106	VALVE INSERT DUCKBILL	
10	36230017	DUCKBILL	
11	00047079	COFFEE SPOUT HOUSING	
12	00047078	FLOW CUP STANDARDT	
13	00047077	FLOW CUP SELF	
15	00100068.001	PLUG-IN NIPPLE WITH BOREHOLE	
16	00100063.001	CONNECTOR AIRE	
17	00100067.001	PLUG-IN NIPPLE WITHOUT BOREHOLE	
18	10700005	REDUCTION KIT	
	23000196	SUCKING NOZZLE	
	38120127	RESTRICTION RING LITTLE WHITE	
19	00060162	SILICON HOSE BLUE (KB) 50SHORE D. 7,0 X 4,0 MM	
20	00055974	DOUBLE PLUG-IN NIPPLE D. 4 MM	
21	00060151	HOSE FITTING TEFLON - SILIKON	
22	00054935	LOCKING CAP WITH SEALG 1/8	
24	00100743.001	AIR PUMP	
25	00100336.001	MIXER HOUSING	
26	00101192.001	PUMP BRAKET S 5021	

K10500_01

Electrical components

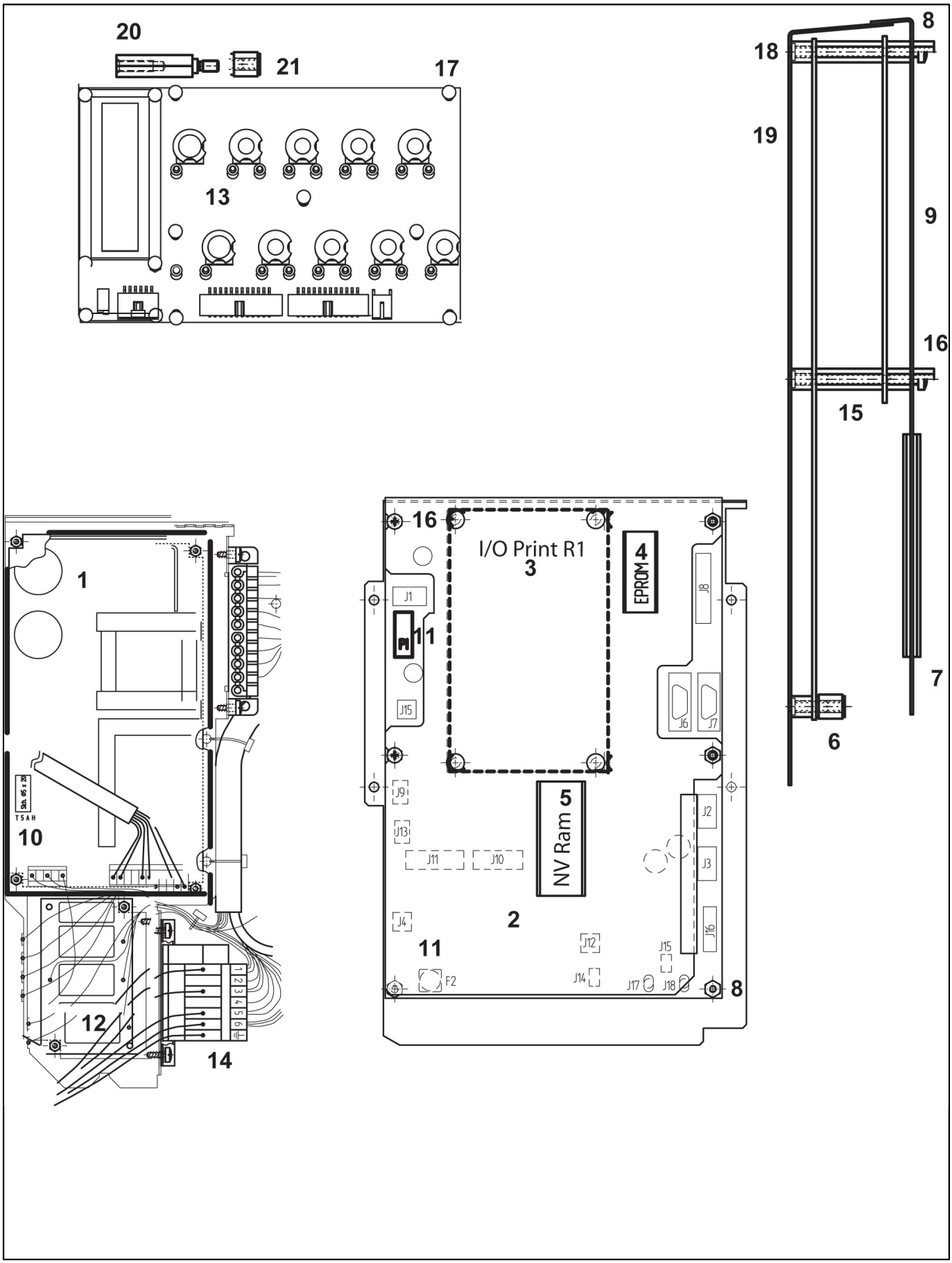

K10500_01

Electrical components

POS.	CODE	DESCRIPTION	NOTES
1	10700258	RETROFIT KIT POWER SUPPLY S50-70	
	34070086	POWER SUPPLY S50/70	
2	00100114.006	MAIN BOARD S70 R2	
	00100114.097	Main Board - replacement R2	
3	00049058	I / O PRINT R1	
4	00055961	EPROM FOR SERIES 70 R1	
	00100114.100	EPROM FOR SERIES 70 R2	
5	00043617	NON VOLATILE RAM	
6	00031191	NUT M4 MM	
7	00046959	EDGE PROTECTIONL = 85MM	
8	00046192	SPACERS	
9	00100235.001	COVER	
10	00040782	MINIATURE FUSE T5AH / 5 X 20MM 250V	
11	00040783	MINIATURE FUSE F5AH / 5 X 20MM 250V	
12	00040654	NOISE FILTER, PRINT	
	00054867	SPACERS M3 X 28MM	
13	00060254	KEYBOARD PRINT FROM 12.05 S50/S70	
	10700260	EMC RETROFIT KIT	
14	00100911.001	MAIN TERMINAL	
	00100953.001	3 TERMINAL CONNECTOR BLUE	
	00100954.001	3 TERMINAL CONNECTOR WHITE	
	00100955.001	MAIN ELECTRIC SUPPLY TERMINAL, MONOPHASE	
15	00048577	NUT SPACERS M4 X 36 MM	
16	00001076	CROSSED RAISED CHEESE HEAD SCREW M4 X 12 MM	
17	00045484	DISTANCE SLEEVE	
18	00036524	SPACERS ROLL D.8 X 8 MM	
19	00039892	CARRIER SHEET METAL	
21	00033896	NUT M3 X 8 MM	

K14016_01

Electrical circuits main board

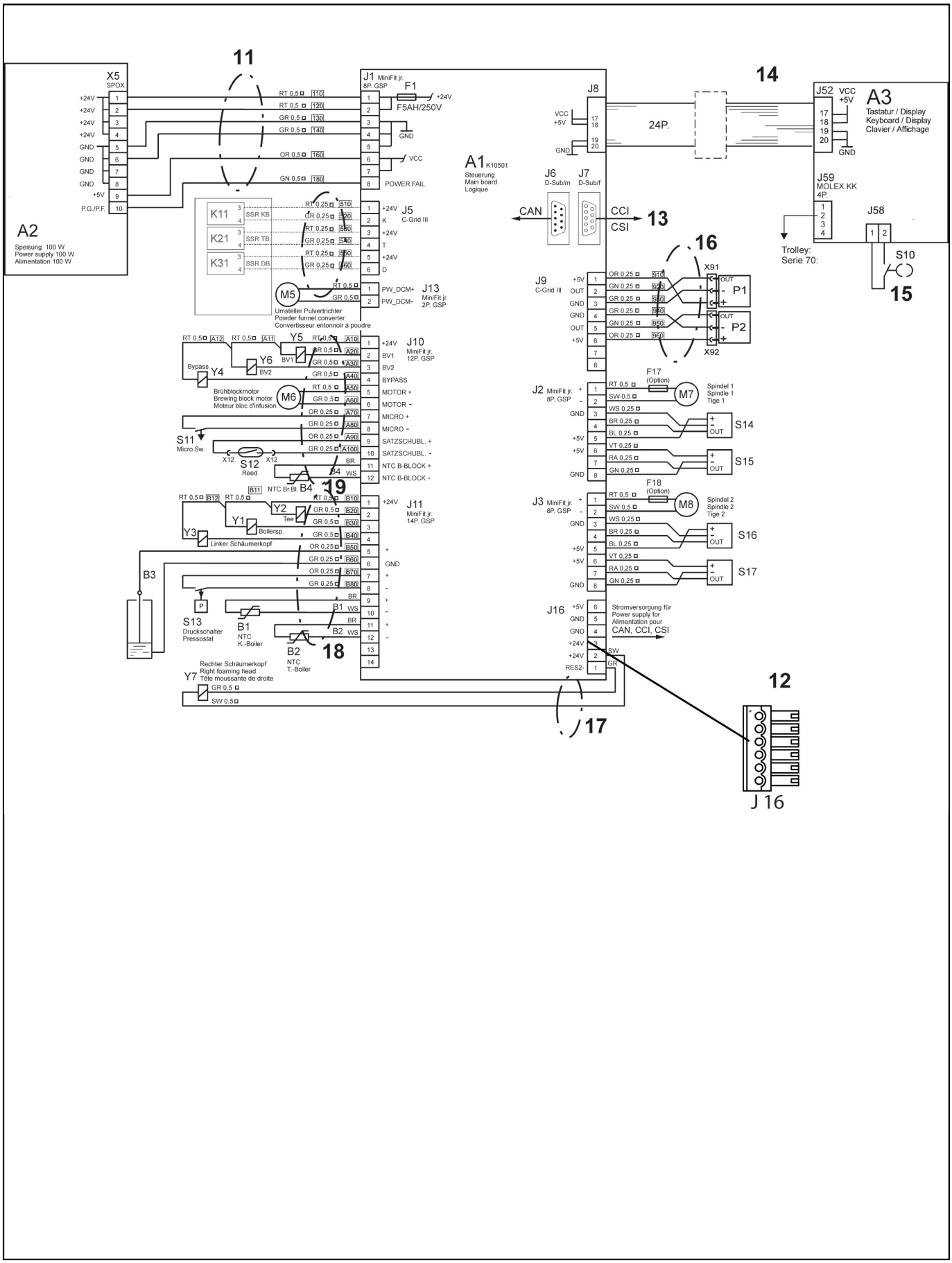

K14016_01

Electrical circuits main board

POS.	CODE	DESCRIPTION	NOTES
11	00100020.070	WIRING SET X5 - J45	
12	00039973		
13	00041333	CSI/CCI CONNECTION CABLE S 70	
	00042472	CAN MAIN CABLE	
	00048713	FLAT CABLE, IO PRINT, TO KEYBOARDL = 300MM	
14	00040891	FLAT CABLE 24 POL.L = 230MM	
	10110723	Flat cable 24 pol.L = 230mm	
	10700260	EMC RETROFIT KIT	
15	00040613	KEY LOCK SWITCH ASSAY.	
16	00056253	CABLE TO KEYBORD PRINT	
17	00047053	CABLE HARNESS J16 - Y7	
18	00058897	CABLE HARNESS J11 2 BOILER	
	00058929	CABLE HARNESS J11 3 BOILER	
19	00040915	CABLE HARNESS J 10	

K14015_01

Electrical circuits power supplay

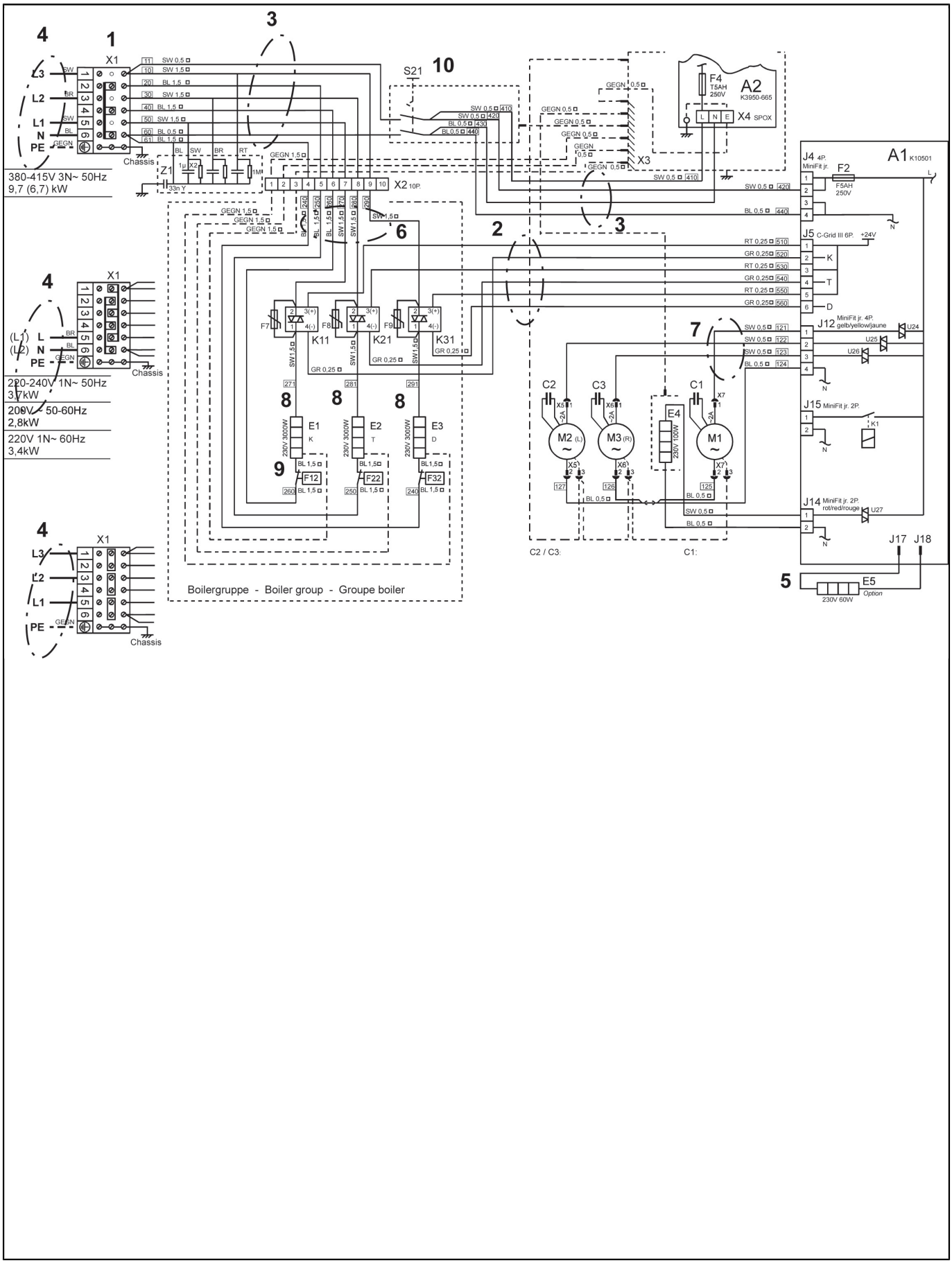

K14015_01

Electrical circuits power supplay

POS.	CODE	DESCRIPTION	NOTES
1	00100911.001	MAIN TERMINAL	
2	00040902	CABLE HARNESS J5 - K11 3 BOILER	
	00056124	CABLE HARNESS J5 - K11 2 BOILER	
3	10110718	POWER SUPPLY S70	
4	00043321	CONNECTION CABLE 3 X 2,5 MM	
	34300073	CABLE	
	34300074	CABLE 3 WIRES 2,5	
5	00046629	HEATING FILM	
6	10110720	HEATING ELEMENT WIRING S70 3 BOILERS	
	10110721	HEATING ELEMENT WIRING S70 2 BOILERS	
7	00045853	CABLE HARNESS J12	
8	00045843	CABLEL = 280MM	
	00045843	CABLEL = 280MM	
	00045844	CABLEL = 180MM	
9	00048057	WIRE BL 140	
10	00030715	ROCKER SWITCH	

K13305_03

Electrical circuits MLR 5 KS 6 + 7

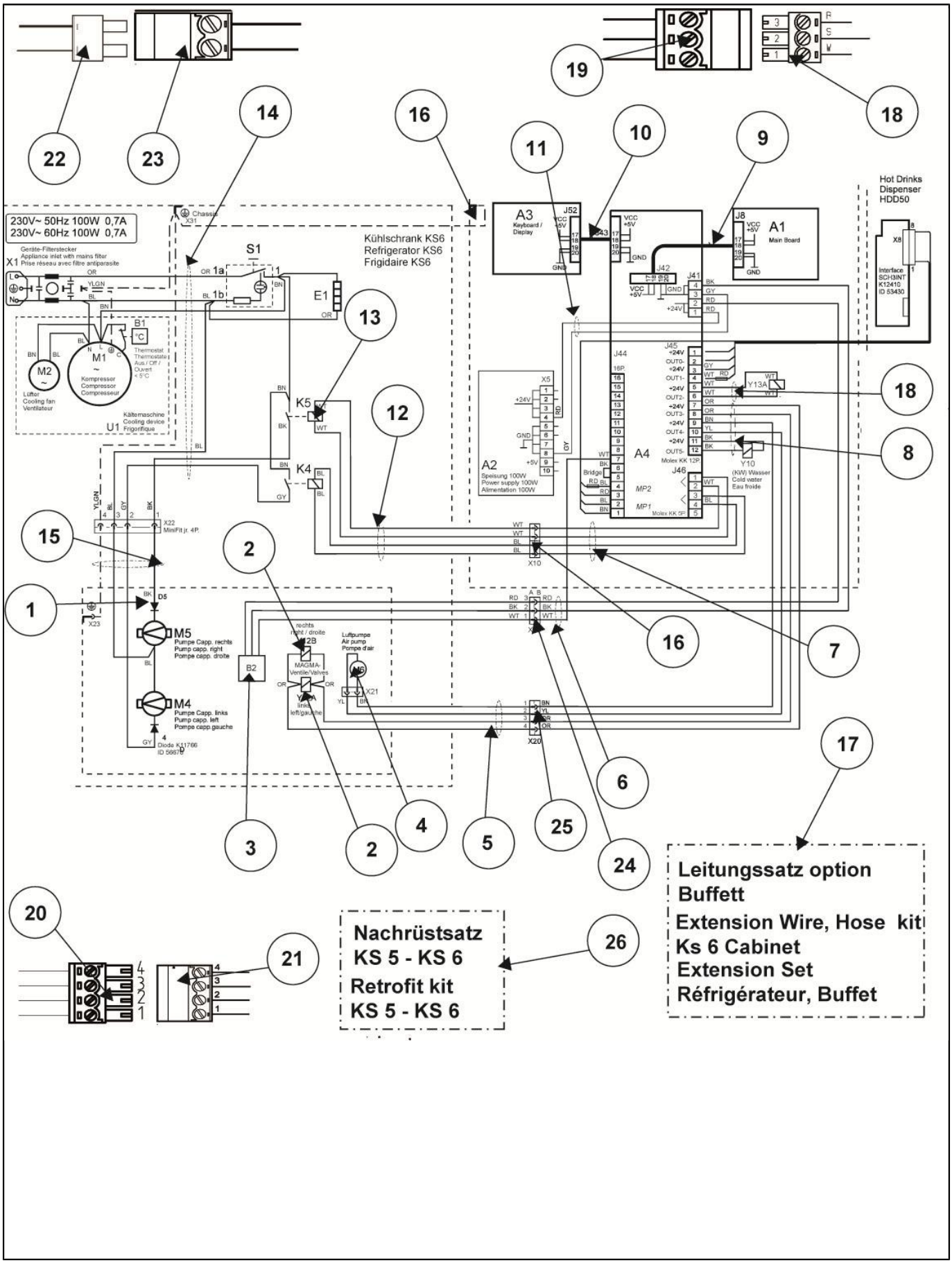

K13305_03

Electrical circuits MLR 5 KS 6 + 7

POS.	CODE	DESCRIPTION	NOTES
1	00054678	DIODE KOMPL. TO GOTEC MILK PUMP	
2	00059209	ELECTROVALVE 3 WAY 8W 24V KS7	
3	34070167	ULTRASONIC DETECTOR FRIDGE SENSOR	
4	00100743.001	AIR PUMP	
5	00059277	CABLE HARNESS X20	
6	00060128	CABLE FOR MILK SENSOR 70 SERIES	
7	00048714	CABLE HARNESS J46 - X 10A	
8	00060129	WIRING SET J45	
9	00048713	FLAT CABLE, IO PRINT, TO KEYBOARDL = 300MM	
10	00048713	FLAT CABLE, IO PRINT, TO KEYBOARDL = 300MM	
11	00100020.070	WIRING SET X5 - J45	
12	00048853	CABLE HARNESS X10B - K4 - K5	
13	00047916	RELAY 24V DC	
14	00100251.001		
15	00100250.001	CABLE HARNESS X22 TO MILK PUMP	
16	00100092.001	ADAPTER CABLE RELAYS	
17	00100078.001	CABLE HARNESS KS CABINET	
18	00057047	PLUG 3 PLOE M	
19	00019388	PLUG 3 PLOE F	
20	00019389	PLUG 4 PLOE M	
21	00033154	PLUG 4 PLOE F	
22	00019036	PLUG 2 POLE M	
23	00048774	PLUG 2 PLOE F	
24	00100090.001	ADAPTER CABLE SENSOR	
25	00100091.001	ADAPTER CABLE L AIR PUMP	
26	00060289	WIRING SET KS 6 UPGRADING S. 70	

K03950_01

Electrical accessories

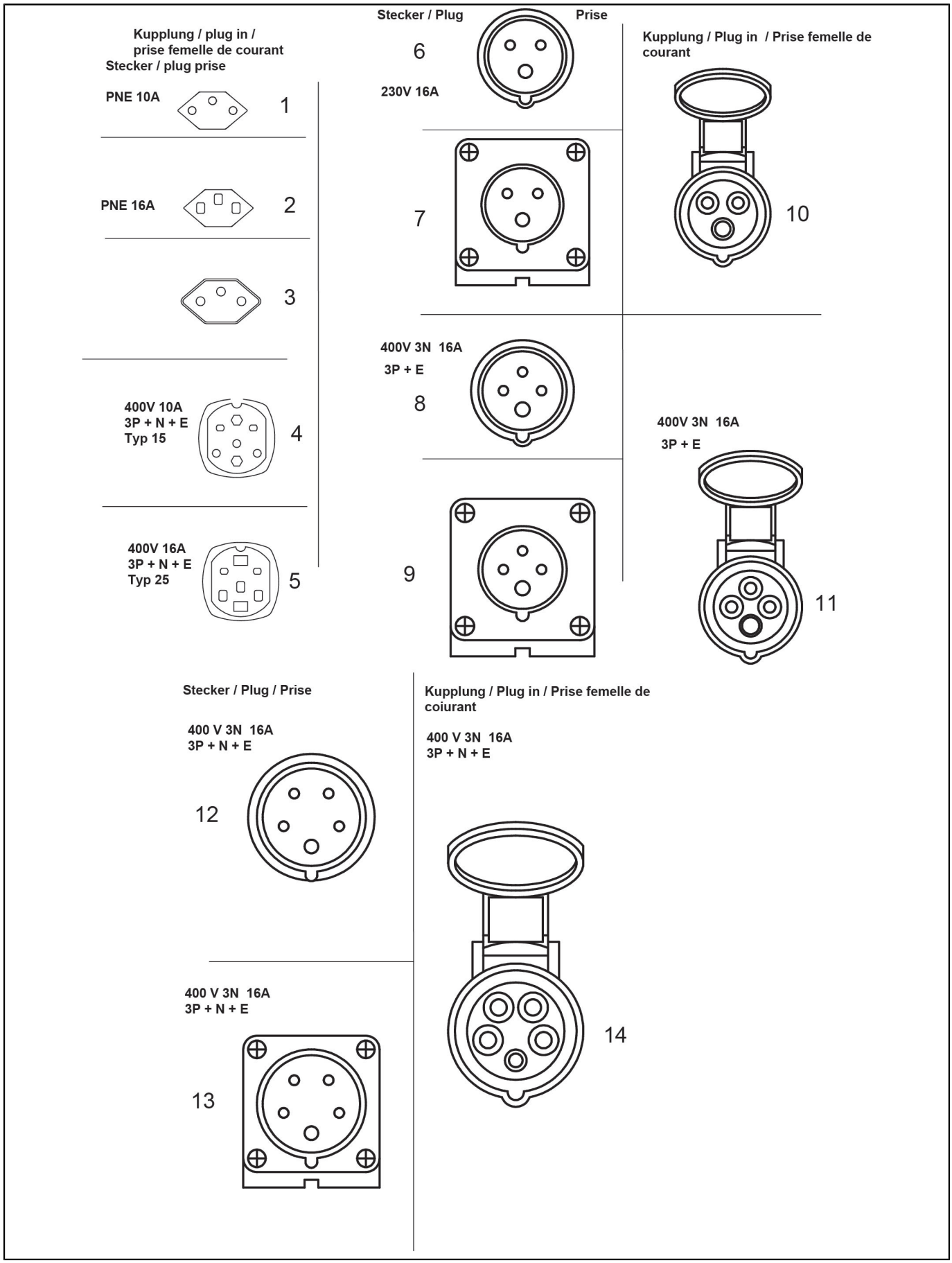

K03950_01

Electrical accessories

POS.	CODE	DESCRIPTION	NOTES
1	00003138	PLUG 230V CH	
2	00003139	PLUG-IN 230V CH	
3	00048290	MACHINE PLUG (CONNECTOR) 220V FELLER T 23 WHITE 3-	
4	00032302	PLUG 400V 10A	
5	00048427	MACHINE PLUG (CONNECTOR) FELLER T 25 WHITE 5-POL.	
6	00048029	PLUG 230V 16A	
7	00048021	SOCKET 230V 16A	
8	00048279	SOCKET 400V 16A	
9	00048241	SOCKET 400V 16A	
10	00048028	PLUG-IN 230V 16A	
11	00048280	PLUG-IN 400V 16A	
12	00043233	PLUG 400V 16A	
13	00048022	SOCKET 400V 16A	
14	00048023	PLUG-IN 400V 16A	

Alphanumeric index

Code	No. table	Pos.
00000932	K10929_02	7
00000932	K14040_01	13
00000935	K14050_03	11
00001065	K10330_01	17
00001074	K10330_01	19
00001074	K14040_02	37
00001076	K10350_01	6
00001076	K10500_01	16
00001076	K14050_03	16
00001087	K10300_01	19
00001176	K14050_03	9
00001177	K14050_03	21
00001439	K10330_01	18
00001514	K10330_01	16
00001518	K14040_01	7
00001521	K14091_02	17
00001521	K14092_01	17
00001521	K14093_03	21
00001522	K14093_03	21
00001722	K14040_02	26
00002207	K10491_01	7
00002207	K10840_01	9
00002207	K14030_04	12
00002218	K10491_01	6
00002218	K10840_01	3
00002240	K14091_02	15
00002240	K14093_03	20
00002240	K14093_03	32
00002328	K10491_01	13
00002328	K10840_01	12
00002752	K10470_03	20
00003138	K03950_01	1
00003139	K03950_01	2
00004014	K10300_01	13
00004015	K10300_01	13
00004101	K11749_02	10
00004101	K11749_02	26
00004104	K10929_02	21
00004104	K11749_02	26
00004105	K10929_02	11
00004105	K10929_02	21
00004107	K11749_02	26
00004113	K10929_02	15
00004128	K10929_02	21
00004129	K10470_03	22
00004130	K10470_03	23
00004473	K10539_01	2
00004474	K10539_01	3
00004491	K14040_01	11
00004491	K14040_02	11
00004712	K10929_02	10
00004713	K10470_03	7
00004713	K11749_02	20
00004715	K14092_01	26
00009915	K14040_02	29
00009917	K11749_02	25
00009917	K11749_02	9
00009917	K11749_02	9
00009917	K14091_02	15
00010488	K10929_02	14
00010488	K11749_02	22
00010488	K14093_03	11
00010488	K14093_03	26
00011313	K14092_01	31
00012636	K10300_01	6
00017162	K10840_01	7
00018876	K10929_02	13

Code	No. table	Pos.
00018876	K14093_03	24
00019036	K13305_03	22
00019388	K13305_03	19
00019389	K13305_03	20
00019974	K10470_03	10
00019974	K11749_02	29
00027170	K11749_02	29
00028840	K10470_03	16
00028840	K14091_02	12
00029221	K11749_02	23
00029221	K14092_01	8
00029568	K11749_02	5
00029575	K10300_01	32
00029575	K14040_01	15
00030059	K10300_01	20
00030499	K10350_01	7
00030715	K14015_01	10
00031191	K10500_01	6
00032036	K10491_01	4
00032302	K03950_01	4
00033154	K13305_03	21
00033303	K10470_03	7
00033303	K10929_02	11
00033303	K14092_01	30
00033303	K14093_03	24
00033896	K10500_01	21
00034088	K10300_01	12
00034089	K10300_01	12
00034927	K10539_01	4
00036524	K10500_01	18
00038649	K10491_01	8
00038653	K10840_01	10
00038731	K10491_01	2
00038761	K14040_01	15
00038778	K14050_03	29
00038781	K14040_02	15
00038785	K14050_03	26
00038787	K10330_01	9
00038823	K10330_01	20
00038826	K10330_01	11
00038850	K10300_01	22
00038869	K14050_03	4
00038899	K10300_01	1
00039054	K10330_01	6
00039063	K14050_03	24
00039064	K14050_03	24
00039067	K14093_03	15
00039083	K10350_01	2
00039088	K14040_01	2
00039090	K14040_01	18
00039135	K14040_01	12
00039135	K14040_02	12
00039136	K10330_01	5
00039138	K14040_01	17
00039208	K10330_01	13
00039245	K14091_02	4
00039325	K10350_01	1
00039331	K14040_01	19
00039332	K14040_01	19
00039437	K10330_01	4
00039675	K10929_02	5
00039749	K10840_01	14
00039750	K14050_03	10
00039757	K10491_01	14
00039757	K10840_01	12
00039759	K10491_01	5
00039811	K10330_01	12

Code	No. table	Pos.
00039817	K10300_01	16
00039868	K14040_01	20
00039879	K14040_01	16
00039892	K10500_01	19
00039937	K10330_01	8
00039973	K14016_01	12
00040018	K10300_01	7
00040019	K10300_01	7
00040262	K10300_01	11
00040263A	K10300_01	31
00040263B	K10300_01	31
00040263C	K10300_01	31
00040263E	K10300_01	31
00040263F	K10300_01	31
00040264A	K10300_01	4
00040264B	K10300_01	4
00040264C	K10300_01	4
00040264E	K10300_01	4
00040404	K10300_01	30
00040447	K14090_01	3
00040517	K14092_01	22
00040562	K10300_01	7
00040570	K10491_01	1
00040598	K14090_01	7
00040609	K14040_02	24
00040611	K14040_02	27
00040613	K10300_01	16
00040613	K14016_01	15
00040654	K10500_01	12
00040730	K10300_01	14
00040730	K10350_01	11
00040743	K14092_01	23
00040782	K10500_01	10
00040783	K10500_01	11
00040891	K14016_01	14
00040902	K14015_01	2
00040915	K14016_01	19
00040915	K14040_01	10
00040956	K14040_01	15
00041132	K14040_02	30
00041132	K14040_02	33
00041132	K14040_02	41
00041149	K10491_01	9
00041252	K10330_01	1
00041253	K10470_03	1
00041260	K14040_01	6
00041333	K14016_01	13
00041493	K10470_03	4
00041506	K14040_01	14
00041506	K14040_02	22
00041644	K10491_01	1
00041644	K10840_01	3
00041653	K14040_01	4
00041707	K14090_01	6
00042264	K10300_01	1
00042324	K10470_03	2
00042472	K14016_01	13
00042841	K10330_01	15
00043215	K10470_03	1
00043233	K03950_01	12
00043321	K14015_01	4
00043408	K10840_01	2
00043462	K10840_01	6
00043549	K10840_01	5
00043617	K10500_01	5
00043666	K10840_01	15
00043734	K10491_01	2

Alphanumeric index

Code	No. table	Pos.
00044381	K14040_01	6
00044431	K14092_01	3
00044431	K14093_03	3
00044443	K14091_02	16
00044443	K14091_02	27
00044443	K14093_03	14
00044443	K14093_03	20
00044464	K10929_02	18
00044464	K14091_02	15
00044464	K14092_01	20
00044464	K14092_01	21
00044464	K14093_03	14
00044464	K14093_03	18
00045069	K10350_01	4
00045124	K14091_02	2
00045124	K14092_01	2
00045124	K14093_03	2
00045375	K14091_02	3
00045484	K10500_01	17
00045682	K14093_03	15
00045688	K14092_01	6
00045695	K14091_02	23
00045696	K14092_01	29
00045698	K10929_02	12
00045699	K10929_02	1
00045714	K10539_01	5
00045715	K10929_02	2
00045843	K14015_01	8
00045843	K14015_01	8
00045844	K14015_01	8
00045853	K14015_01	7
00046140	K14091_02	25
00046192	K10500_01	8
00046272	K14030_04	10
00046312	K14040_02	39
00046366	K10840_01	1
00046603	K10840_01	1
00046604	K10929_02	6
00046629	K14015_01	5
00046902	K10470_03	21
00046956	K14050_03	19
00046957	K14050_03	19
00046959	K10500_01	7
00047053	K14016_01	17
00047077	K14030_01	13
00047077	K14030_02	13
00047077	K14030_04	15
00047078	K14030_01	12
00047078	K14030_02	12
00047079	K14030_01	11
00047079	K14030_02	11
00047079	K14030_04	9
00047905	K14050_03	6
00047916	K13305_03	13
00047934	K14030_04	3
00047935	K14030_04	4
00047937	K14030_04	10
00047960	K14030_04	13
00048021	K03950_01	7
00048022	K03950_01	13
00048023	K03950_01	14
00048028	K03950_01	10
00048029	K03950_01	6
00048057	K14015_01	9
00048057	K14092_01	24
00048153	K14040_02	36
00048241	K03950_01	9

Code	No. table	Pos.
00048279	K03950_01	8
00048280	K03950_01	11
00048290	K03950_01	3
00048405	K14091_02	13
00048417	K10840_01	16
00048427	K03950_01	5
00048474	K14093_03	33
00048548	K14050_03	15
00048550	K14050_03	10
00048577	K10500_01	15
00048713	K13305_03	10
00048713	K13305_03	9
00048713	K14016_01	13
00048714	K13305_03	7
00048774	K13305_03	23
00048820	K11749_02	14
00048853	K13305_03	12
00049037	K14030_01	2
00049037	K14030_02	2
00049058	K10500_01	3
00049333	K11749_02	12
00049510	K10300_01	14
00049510	K10350_01	11
00049538	K10350_01	8
00049784	K10300_01	12
00049848	K10350_01	5
00049849	K10350_01	1
00049852	K10350_01	9
00049966	K11749_02	9
00050010.001	K14030_01	4
00050010.001	K14030_02	4
00050095	K14030_04	5
00050096	K14030_04	2
00050117	K10350_01	10
00053602	K14050_03	2
00053755	K14040_02	38
00054046	K14040_02	35
00054048	K14040_02	34
00054306	K10840_01	2
00054344	K11749_02	19
00054647	K14030_04	6
00054678	K13305_03	1
00054714	K14091_02	15
00054714	K14092_01	20
00054714	K14093_03	9
00054861	K14050_03	14
00054863	K14050_03	14
00054863	K14050_03	14
00054867	K10500_01	12
00054868	K14050_03	25
00054915	K14091_02	10
00054915	K14092_01	10
00054935	K14030_01	22
00054946	K14030_04	8
00054981	K10300_01	18
00054994	K11749_02	13
00054994	K14040_02	29
00055003	K10300_01	8
00055389	K14050_03	3
00055443	K14030_04	14
00055460A	K10300_01	15
00055460B	K10300_01	15
00055460C	K10300_01	15
00055460E	K10300_01	15
00055557	K10300_01	9
00055715	K14040_02	32
00055717	K14040_02	32

Code	No. table	Pos.
00055720	K14050_03	28
00055725	K14040_01	1
00055726	K14040_01	1
00055734	K10300_01	18
00055748	K10539_01	6
00055800	K10929_02	20
00055800	K14093_03	7
00055803	K14091_02	25
00055805	K14091_02	6
00055862	K14091_02	19
00055864	K14091_02	24
00055864	K14092_01	27
00055864	K14093_03	8
00055923	K10330_01	3
00055924	K14091_02	14
00055924	K14092_01	14
00055924	K14093_03	23
00055961	K10500_01	4
00055974	K11749_02	18
00055974	K14030_01	20
00055975	K11749_02	7
00056038	K11749_02	11
00056077	K14050_03	3
00056090	K14050_03	3
00056103	K14040_02	25
00056103	K14092_01	5
00056120	K10929_02	1
00056124	K14015_01	2
00056144	K14092_01	12
00056145	K10929_02	20
00056145	K14091_02	18
00056145	K14093_03	25
00056145	K14093_03	7
00056253	K14016_01	16
00056322	K14093_03	11
00056544	K10300_01	30
00056760	K14092_01	13
00056805	K14093_03	27
00056836	K10300_01	20
00056913	K14030_02	1
00056948	K10840_01	5
00057047	K13305_03	18
00057648	K10300_01	5
00057648	K14030_04	7
00057655	K14030_04	1
00057681	K10470_03	18
00057681	K10929_02	3
00057681	K14091_02	9
00057681	K14092_01	9
00057682	K10929_02	19
00057975	K14092_01	11
00058174	K10300_01	7
00058346	K14091_02	1
00058348	K14091_02	5
00058348	K14092_01	5
00058349	K14092_01	1
00058350	K14093_03	1
00058366	K10300_01	18
00058398	K10300_01	2
00058399	K10300_01	2
00058581	K14091_02	20
00058581	K14092_01	27
00058641	K10300_01	3
00058836	K14091_02	10
00058836	K14092_01	10
00058836	K14093_03	4
00058869	K10300_01	3

Alphanumeric index

Code	No. table	Pos.
00058882	K10470_03	14
00058897	K14016_01	18
00058929	K14016_01	18
00058942	K14090_01	1
00058943	K14090_01	1
00058944	K14090_01	1
00059133	K11749_02	21
00059209	K13305_03	2
00059277	K13305_03	5
00060076	K10491_01	11
00060115	K14050_03	8
00060116	K14050_03	8
00060128	K13305_03	6
00060129	K13305_03	8
00060151	K14030_01	21
00060162	K14030_01	19
00060254	K10500_01	13
00060272	K14093_03	1
00060273	K14091_02	1
00060283	K14050_03	5
00060289	K13305_03	26
00060321	K14092_01	1
00060322	K14090_01	1
00060332	K14030_01	6
00060441	K10350_01	12
00060490	K10470_03	6
00060492	K10491_01	1
00060604	K10840_01	17
00061046	K10929_02	21
00100020.070	K13305_03	11
00100020.070	K14016_01	11
00100042.001	K14030_02	14
00100046.002	K11749_02	15
00100054.005	K10300_01	18
00100054.009	K10300_01	18
00100054.015	K10300_01	18
00100063.001	K14030_01	16
00100064.001	K14030_01	1
00100064.001	K14030_02	1
00100067.001	K14030_01	17
00100068.001	K14030_01	15
00100078.001	K13305_03	17
00100089.001	K14040_01	9
00100090.001	K13305_03	24
00100091.001	K13305_03	25
00100092.001	K13305_03	16
00100106.001	K14091_02	21
00100106.001	K14092_01	28
00100106.001	K14093_03	22
00100114.006	K10500_01	2
00100114.097	K10500_01	2
00100114.100	K10500_01	4
00100135.001	K14050_03	23
00100136.001	K14050_03	23
00100147.001	K14040_02	34
00100149.001	K14040_02	34
00100168.001	K10470_03	19
00100168.001	K10929_02	16
00100185.001	K14093_03	31
00100186.013	K14093_03	29
00100188.001	K14093_03	28
00100235.001	K10500_01	9
00100243.002	K14091_02	5
00100243.002	K14092_01	5
00100250.001	K13305_03	15
00100251.001	K13305_03	14
00100268.002	K14093_03	6

Code	No. table	Pos.
00100272.001	K14093_03	30
00100280.001	K14093_03	12
00100290.001	K14093_03	13
00100336.001	K14030_01	25
00100356.001	K11749_02	1
00100361.001	K11749_02	1
00100506.001	K14050_03	7
00100507.001	K14050_03	7
00100510.001	K14050_03	3
00100558.001	K10929_02	4
00100558.001	K14093_03	35
00100559.001	K10929_02	4
00100559.001	K14040_02	35
00100559.001	K14092_01	19
00100559.001	K14092_01	6
00100559.001	K14093_03	35
00100560.001	K10929_02	4
00100560.001	K14040_02	35
00100560.001	K14092_01	20
00100560.001	K14092_01	6
00100560.001	K14093_03	35
00100743.001	K13305_03	4
00100743.001	K14030_01	24
00100779.001	K10330_01	1
00100830.005	K11749_02	4
00100832.005	K11749_02	4
00100911.001	K10500_01	14
00100911.001	K14015_01	1
00100953.001	K10500_01	14
00100954.001	K10500_01	14
00100955.001	K10500_01	14
00101036.001	K11749_02	21
00101096.001	K10470_03	15
00101192.001	K14030_01	26
10060058	K14093_03	10
10060605	K14091_02	7
10060605	K14092_01	7
10110718	K14015_01	3
10110720	K14015_01	6
10110721	K14015_01	6
10110723	K14016_01	14
10700005	K14030_01	18
10700258	K10500_01	1
10700260	K10500_01	13
10700260	K14016_01	14
10701050	K14050_03	13
10705529	K10300_01	10
10705529	K10350_01	3
10705530	K10350_01	3
10705534	K14093_03	36
10705719	K10470_03	8
10705811	K14030_02	6
10705826	K14050_03	3
10705939	K14040_02	21
10705959	K14050_03	30
23000196	K14030_01	18
23000197	K14050_03	22
23000288	K10470_03	9
23000299	K11749_02	25
23000299	K11749_02	6
23000299	K14040_02	40
34010009	K14040_02	21
34010009	K14050_03	1
34020017	K10470_03	2
34020022	K10330_01	2
34020025	K10330_01	2
34049006	K10470_03	15

Code	No. table	Pos.
34049006	K11749_02	3
34049007	K10470_03	15
34049007	K11749_02	3
34070086	K10500_01	1
34070167	K13305_03	3
34200069	K10330_01	14
34200071	K14040_01	8
34200071	K14040_02	28
34200353	K14090_01	2
34300073	K14015_01	4
34300074	K14015_01	4
36220009	K14093_03	17
36230017	K14030_01	10
36230017	K14030_02	10
36402001	K14040_02	41
36404007	K14050_03	20
36404013	K14093_03	16
36404053	K14093_03	16
36404054	K11749_02	24
36901804	K10539_01	1
36930110	K14050_03	17
36990004	K10491_01	3
36990004	K10840_01	14
36990004	K10840_01	8
37030408	K14040_01	3
37030408	K14090_01	4
37060413	K10330_01	7
37122904	K14092_01	10
37122904	K14092_01	16
37122904	K14093_03	5
38120106	K14030_01	9
38120106	K14030_02	9
38120127	K14030_01	18
38120127	K14030_01	5
38120127	K14030_02	5
38120129	K14050_03	17
38221015	K10840_01	13
38228071	K10470_03	17
38228071	K14040_02	23
38228072	K10929_02	8
38228072	K11749_02	27
38228072	K14030_02	3
38228072	K14030_04	11
38228072	K14050_03	12
38228072	K14091_02	11
38228072	K14092_01	25
38228073	K10491_01	10
38228073	K10840_01	11
38228074	K10470_03	13
39930001	K11749_02	17
39930008	K10539_01	7
39930008	K11749_02	16
45010208	K10300_01	21
45010209	K10300_01	21
50000004	K14040_02	25
69000288	K10470_03	3
69000737	K10470_03	11
69200089	K14050_03	18
69200133	K14050_03	27
69200133	K14050_03	5
69200134	K11749_02	24
69200134	K11749_02	28
69200134	K14030_01	7
69200134	K14030_02	7
69200134	K14040_02	31
69200137	K10470_03	12
69200138	K10470_03	5

Alphanumeric index

Code	No. table	Pos.
69200139	K14040_02	38
69200140	K10491_01	12
69200140	K10840_01	4
69200141	K14093_03	34
69200142	K10929_02	9
69200142	K14091_02	8

Contacts

HEADQUARTERS, PRODUCTION PLANT AND R&D CENTERS

Rancilio Group s.p.a.
Viale della Repubblica 40
20010 Villastanza di Parabiago
Milano - Italy
Tel +39 0331 408200
Fax +39 0331 551437
www.ranciliogroup.com
info@ranciliogroup.com

Egro Suisse AG
Bahnhofstrasse 66
5605 Dottikon - Switzerland
Tel. +41 (0)56 616 95 95
Fax +41 (0)56 616 95 97
www.egrocoffee.com
info@egrocoffee.com

WORLDWIDE BRANCH LOCATIONS

SPAIN
RancilioGroup Espana, s.a.
Gran Vía de Carlos III, 84 3ª
Edificio Trade
08028 Barcelona - Spain
Ph. +34 902 884 275
Ph. +34 934 923 414
Fax +34 934 965 701
www.ranciliogroup.com
info-es@ranciliogroup.com

PORTUGAL
Rancilio Group Portugal Lda
Estrada da Falagueira nº 68 E
2700-365 Amadora-Lisboa - Portugal
Ph. + 351 21 019 10 91
Fax + 351 21 019 10 91

Rua Nova do Seixo 1282
4465-706 Leca do Balio-Porto - Portugal
Ph. + 351 22 010 14 19
Fax + 351 22 010 14 19
www.ranciliogroup.com
info-pt@ranciliogroup.com

GERMANY
Rancilio Group Deutschland GmbH
Talstrasse 27
97990 Weikersheim - Germany
Ph. +49 7934 99 29 30
Fax +49 7934 99 29 330
www.ranciliogroup.de
info-de@ranciliogroup.com

SWITZERLAND
Egro Suisse AG
Bahnhofstrasse 66
5605 Dottikon - Switzerland
Tel. +41 (0)56 616 95 95
Fax +41 (0)56 616 95 97
www.egrosuisse.ch
info@egrosuisse.ch

USA/CANADA
RancilioGroup North America Inc.
1340 Internationale Parkway / Suite 200
Woodridge, IL 60517 - U.S.A.
Ph: +1 630 914 7900
Fax: +1 630 914 7901
Toll Free: +1 877 726 2454
www.ranciliogroup.com
info@ranciliogroupna.com