EGRO

BUILT FOR EXCELLENCE

EMQM v.36

SPARE PARTS CATALOGUE

en-US

EGRO MODE QUICK MILK

EGRO MODE

Index

1000 - Housing.....4
1001 - Front Panel.....6
2000 - Coffee line.....8
2001 - Coffee Brewing Group.....10
2001_2 - 12
2002 - Bean Hopper-Grinders.....14
2003 - Water Inlet System.....16
2005 - 18
3000 - Electric Part/Electronic Board.....20
4000 - 22
5001 - 24
5002 - POWDER MODULE.....26
5003 - 28
5004 - 30
Alphanumeric index.....32

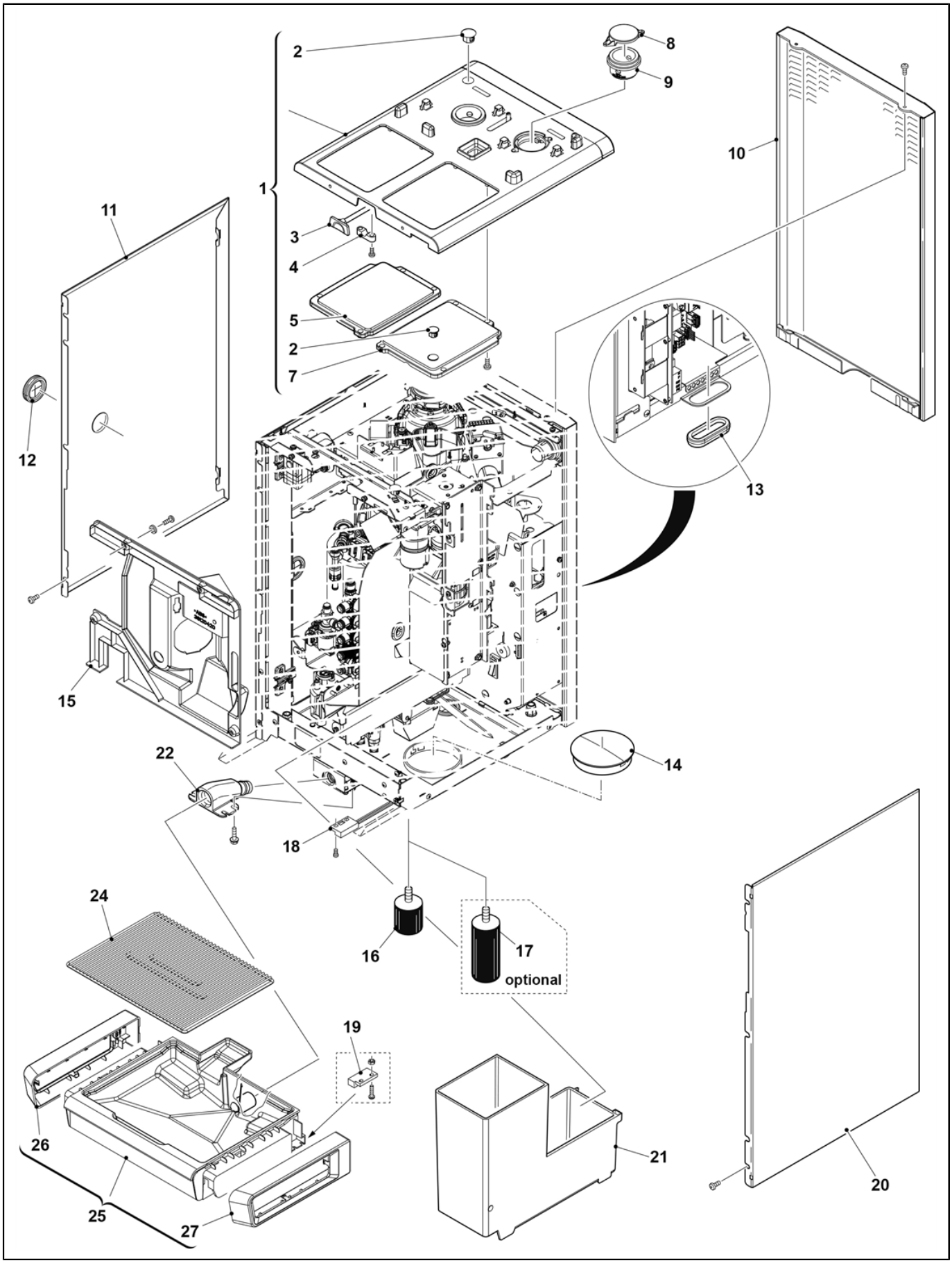
1
2
3
4
5
2
7
8
9
10
11
12
13
14
15
16
17
optional
18
19
20
21
22
24
25
26
27

Pos.	Code	Description	Notes
1	10120248	Top Lid Wiring	
	10701908	Top Lid Assy.	
2	38221026	Closing Cap D.12	
3	38120453	closing handle	
4	34200398	cableholder with screw fix	
5	38120440	lid no powder left	
7	38120441	lid no powder right	
8	38120455	Coffee Lid Single Grinder	
9	36990125	beans inlet rubber	
	38120452	coffee sensor protection	
10	32551590A	Rear Panel	
11	32551589A	Side Panel With Hole	
	32551600A	Side Panel	
12	34200319	Cableholder With Membrane	
13	36322011	oval cablehole 46x12	
14	38221018	Cap D. 85.7 Mm	
15	38120420	mixing system bracket	
	38120430	internal cover front door	
16	69001227	Foot 40X 102 M10	
17	69001226	Foot 40X 52 M10	
18	34020138	Magneti Reed 25x14	
19	34020138	Magneti Reed 25x14	
20	32551600A	Side Panel	
21	100600020	KIT SCARICO FONDI	
	38120700	coffee waste bin	
	38910002	Coffee Drain Pipe 75 X 250	
22	10705750	Retrofit Kit Drip Tray/16 Zero	
	36404065	O-Ring 17.0X3.5 Nbr 70 Black	
24	10781314	Cup Tray	
25	10701906	Drain Tray Assy.	
26	38120707	DRIP TRAY LEFT SIDE PART MODE	
27	38120708	DRIP TRAY RIGHT SIDE PART MODE	
28	34100026	closing with push and micro	

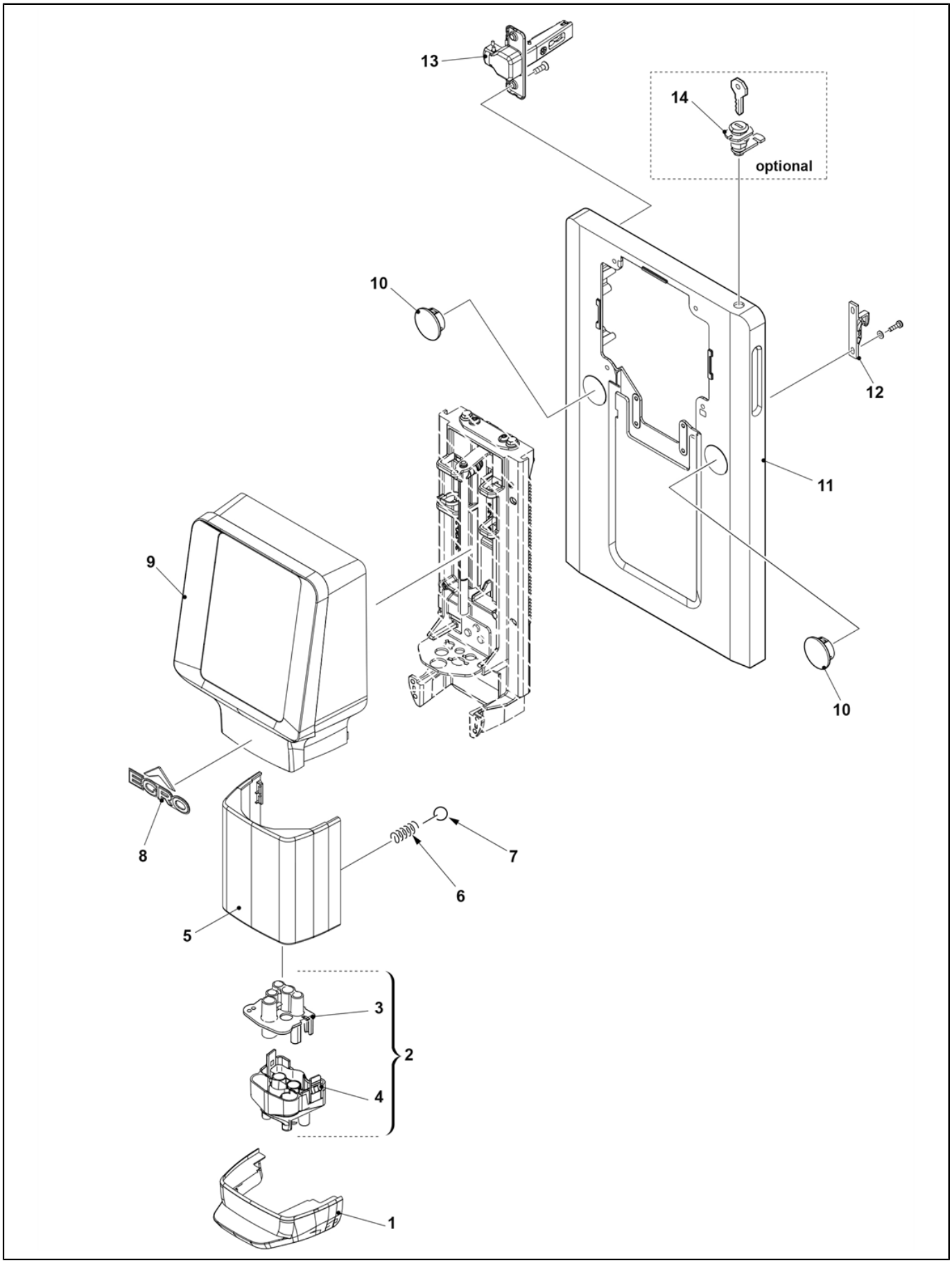
13
14
optional
10
12
11
9
10
8
7
6
5
3
2
4
1

Pos.	Code	Description	Notes
1	38120609	Closing Cover For Outlet Next	
2	10701391	Standard Spout D. 6.3Mm	
3	38120210	Upper Spout Nms	
4	38120277	Coffee Outlet Lower Part D.6,3	
5	38120710	COVER outlet MODE black	
	38120710L	COVER outlet MODE black QM	
6	39110062	At Ball Spring	
7	37900115	Ball 1/4 100	
8	45010384	Egro Logo Small/21	
9	101000003	Display 7 Inch	
10	38120722	Cap No Wand	
11	21000021A	Front Door Mode	
12	69000424	Hook Front Panel	
14	100600010	Lock door Mode	
15	69000287	Hinge Salice	
	69000319	Hinge Salice Next	

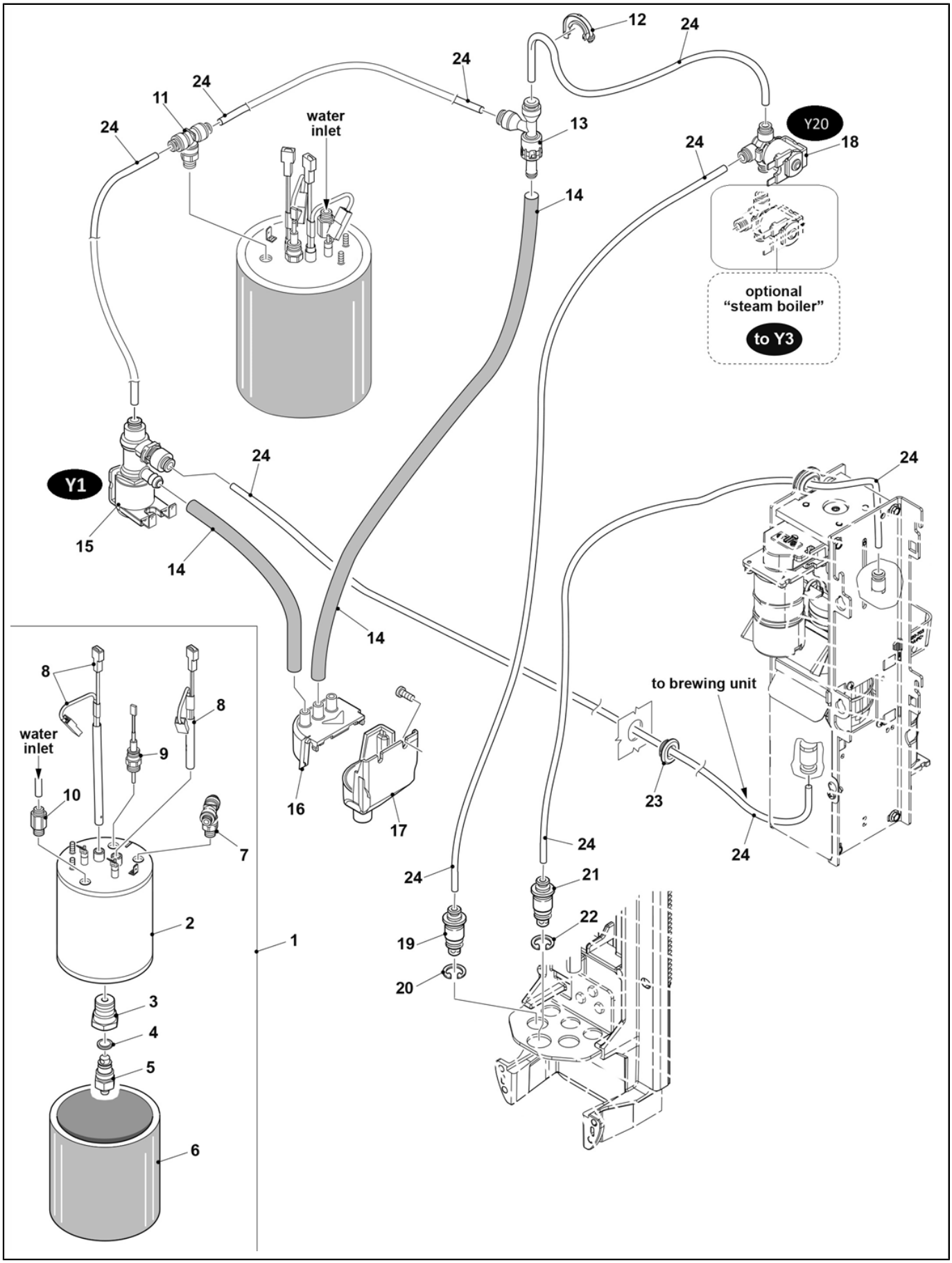
12
24
24
11
24
water
inlet
13
Y20
18
24
14
optional
"steam boiler"
to Y3
Y1
24
15
14
14
24
8
8
water
inlet
9
10
7
16
17
to brewing unit
23
24
24
24
21
22
19
20
2
1
3
4
5
6

Pos.	Code	Description	Notes
1	10702042	Coffee Boiler 230 Assy	
2	10020046	Coffee Boiler 230V 1800W 0,5L	
	10020047	Coffee Boiler 120V 1400W 0,5L	
3	23000463	Drain connection NTC	
4	36402003	O-Ring 9,25 X 1,78 V 75Sh	
5	25217018	Connection Hot Water Drain	
6	69001224	Boiler Insulation 0,5	
7	69200207	T connector 6xG1/8 PPSU	
8	34200402	Thermal Fuse 20a	
9	34070381	Temperature Probe NTC	
10	69200173	Check Valve 4 X G1/8	
11	69200208	T Connector 4xG1/8 PPSU	
12	38120611	Elbow D.180 Pipe Fep D.4	
13	69200204	Expansion Valve 12Bar	
14	00004475	Silicon Hose D. 12 X 8 Mm	
15	34040215	Solenoid valve 3/2 24v d2	
16	38120110	Drain Collector Upper Part	
17	38120109	Drain Collector Lower Part	
18	34040217	Solenoid Valve 1.2 24V	
19	10701019	Central Injector/14	
20	37521001	Snap Ring D. 10	
21	10701020	Coffee Injector	
22	00100186.013	Snap Ring D. 13 Inox	
23	34200359	cable hole clase 5 1gr	
24	38228072	Teflon Hose Fep D. 4,0 X 2,5	

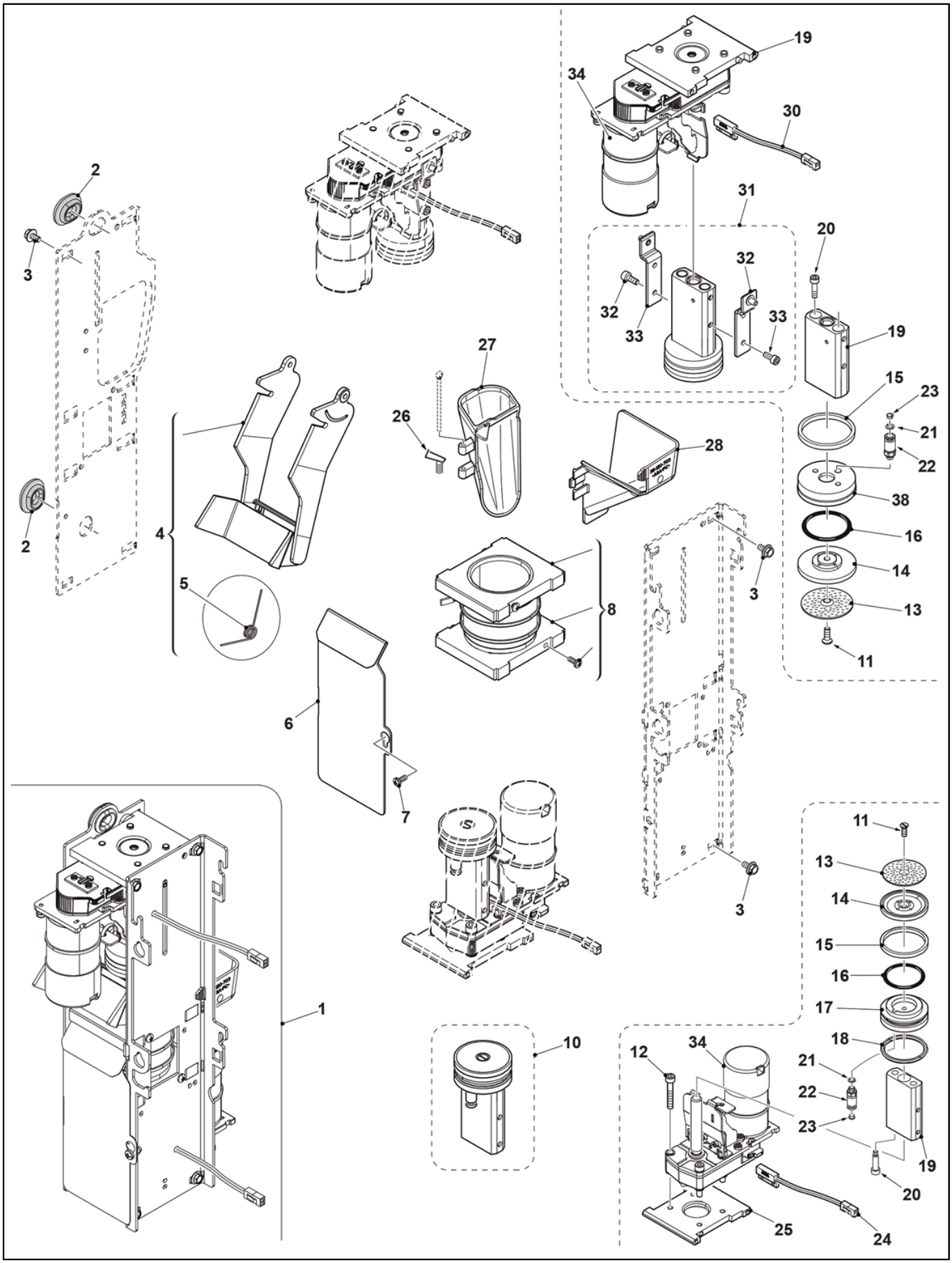
19
34
30
31
20
32
32
33
33
19
15
23
21
22
38
16
14
13
11
2
3
2
27
26
28
4
5
8
3
6
7
3
11
13
14
15
16
17
18
21
22
23
19
20
1
10
12
34
25
24

Pos.	Code	Description	Notes
1	00057446 10054008	Gasket Kit Brewing Group Bc18 Brewing Unit Bc18	
2	36322004	Panel Gummy	
3	37040409	Screw M4 X 8 Te	
4	10700192	Wipe Assy. Bc18	
5	39110088		
6	32332529	spindle motor cover lower	
7	00001074	Crossed Raised Cheese Head Screw M4 X 10 Mm	
8	10701036	Brewing Chamber Bc18	
10	10700177	Lower Piston Bc18	
11	00001176	Countersunk Screw M4X12 Mm	
12	00000935	Hex Socket Head Screw M5 X 30 Mm	
13	00060116	Brewing Sieve D. 44 Mm	
14	36930022	Filter Holder 50 Peek	
15	00039064	Turcon Ring 39 X 44 X 4	
16	00100136.001	O-Ring 31,35 X 3,53 Silicone 70Sh Red	
17	36930110	Lower Piston Gr. Bc18	
18	00100506.001	O-Ring 36,09 X 3,53 Silicone 70Sh	
19	10701050	Piston Shaft With Magnet	piston shaft for BC18, ATTENTION to the magnet position. (could be used also on L61 or previous groups, put the magnet on the opposite side) albero pistone per BC18, ATTENZIONE alla posizione del magnete. (può essere utilizzato su gruppi L61 o precedenti posizionando al contrario il magnete)
20	00048548	Hex Socket Head Screw For Peek Pistonm4 X 15 Mm	
21	00060283	O-Ring 4 X 1,2 F	
22	69200133	Straight Connector D.4 X M5	
23	00048550	Flow Limiter D. 0.7	
24	34020125	End Switch Spindle Motor	
25	240100002		
26	39110089	funnel spring bc18/22	
27	38120702	BG ROTATABLE FUNNEL	
28	38120703	BG COFFEE GROUNDS SLIDE	Fit for all generation brewing unit (L61/ BC18)/ passt für alle Generationen von Brühgruppen (L61/BC18)
29	340100004		
30	34020125	End Switch Spindle Motor	
31	10700176	Upper Piston Bc18	
32	32331443	Bracket Upper Piston	
33	00000928	Hex Socket Head Screw M4 X10 Mm	
34	10701051	Spindle Motor With Sensor	
38	36930111	Upper Piston Group Bc18	

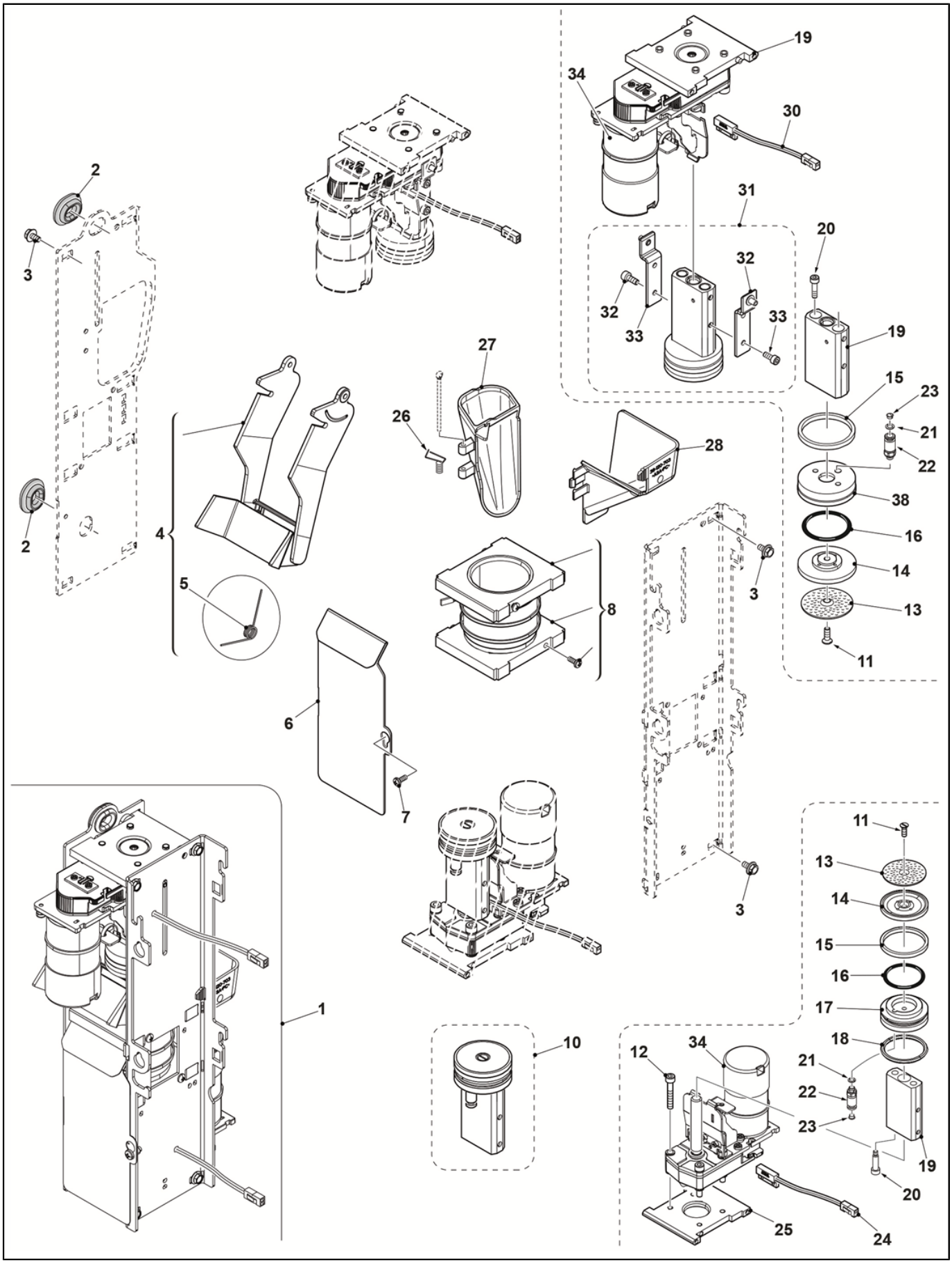
19
34
30
31
20
32
32
33
33
19
15
23
21
22
38
16
14
13
11
2
3
2
27
26
28
4
5
8
3
6
7
3
11
13
14
15
16
17
18
21
22
23
19
20
1
10
12
34
25
24

Pos.	Code	Description	Notes
1	10054011 10701591	Brewing Unit Bc22 Kit Group Gasket Bc22	
2	36322004	Panel Gummy	
3	37040409	Screw M4 X 8 Te	
4	10700192	Wipe Assy. Bc18	
5	39110088		
6	32332529	spindle motor cover lower	
7	00001074	Crossed Raised Cheese Head Screw M4 X 10 Mm	
8	10701904	Brewing Chamber BC22	
10	10701008	Lower Piston Bc22	
11	00001176	Countersunk Screw M4X12 Mm	
12	00000935	Hex Socket Head Screw M5 X 30 Mm	
13	40200013	Shower Brewing Unit Egro 46Mm	
14	36930022	Filter Holder 50 Peek	
15	36201037	Turcon Ring 39 X 50 X 4	
16	36404024	Oring 37,69X3,53 80Sh	
17	36930117	Lower Piston Bc22	
18	36404066	Oring 42,86X3,53 80Sh	
19	10701050	Piston Shaft With Magnet	piston shaft for BC18, ATTENTION to the magnet position. (could be used also on L61 or previous groups, put the magnet on the opposite side) albero pistone per BC18, ATTENZIONE alla posizione del magnete. (può essere utilizzato su gruppi L61 o precedenti posizionando al contrario il magnete)
20	00048548	Hex Socket Head Screw For Peek Pistonm4 X 15 Mm	
21	00060283	O-Ring 4 X 1,2 F	
22	69200133	Straight Connector D.4 X M5	
23	00048550	Flow Limiter D. 0.7	
24	34020125	End Switch Spindle Motor	
25	101000038	GEAR MOTOR LOWER NO PIN PLATE+SENSOR BC18 MODE	
26	39110089	funnel spring bc18/22	
27	38120702	BG ROTATABLE FUNNEL	
28	38120703	BG COFFEE GROUNDS SLIDE	Fit for all generation brewing unit (L61/ BC18)/ passt für alle Generationen von Brühgruppen (L61/BC18)
30	34020125	End Switch Spindle Motor	
31	10701007	Upper Piston Assy. Bc22	
32	32331443	Bracket Upper Piston	
33	00000928	Hex Socket Head Screw M4 X10 Mm	
34	101000008 101000038 340100004	GEAR MOTOR UPPER +PLATE+SENSOR BC18 MODE GEAR MOTOR LOWER NO PIN PLATE+SENSOR BC18 MODE	
38	36930118	Upper Piston Bc22	

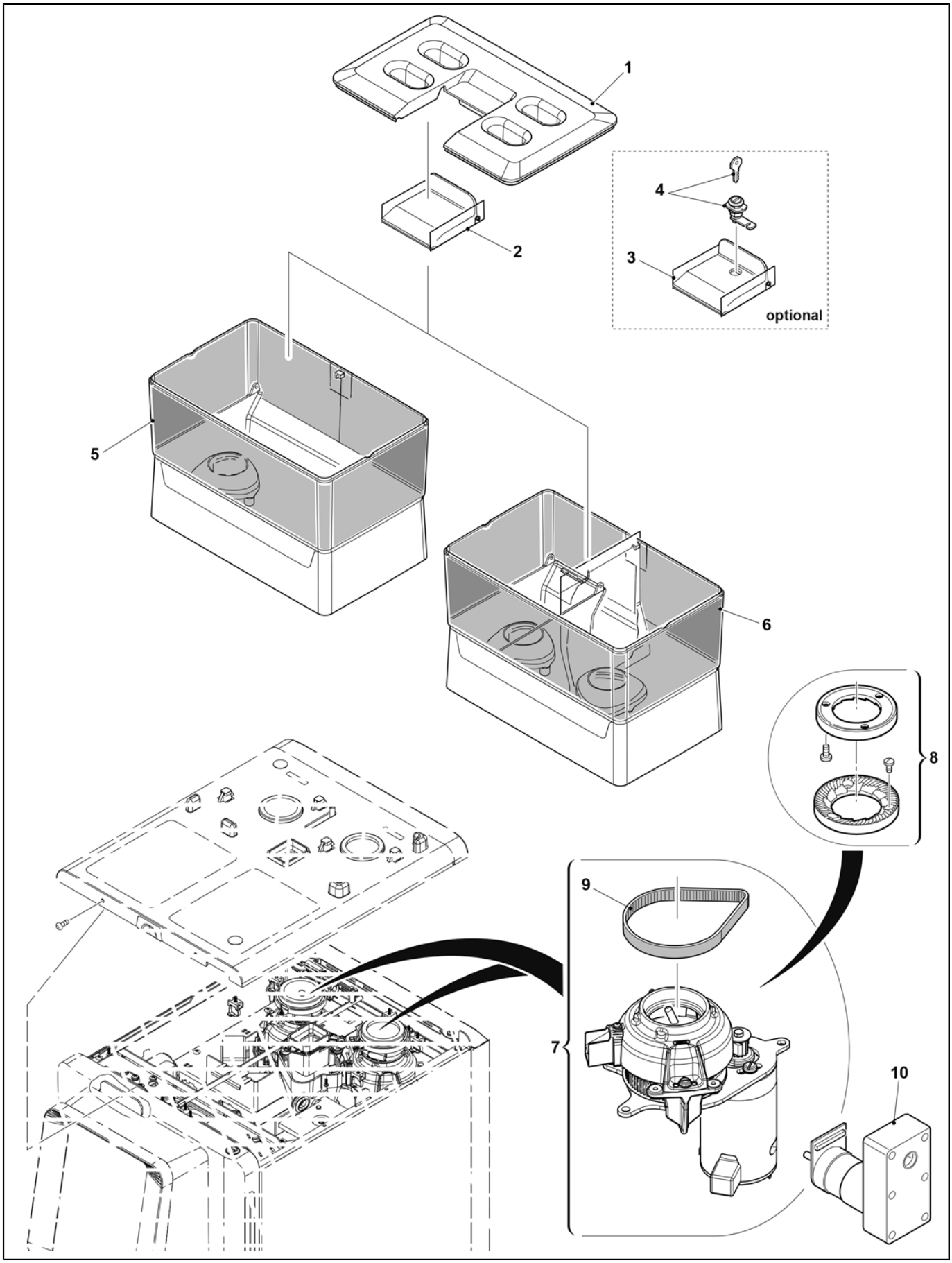
1
2
3
4
optional
5
6
7
8
9
10

Pos.	Code	Description	Notes
1	38120439	Bean Hopper Lid	
2	38120450	Decaf Inlet Cap	
3	38120450L	Decaf Inlet Cap Self	
4	100600010R		
5	10701888	Single Bean Hopper Assy.	
6	10701889	Double Bean Hopper Assy.	
7	10706109	Grinder 230V Assy.	
	10706111	Grinder 120V Assy.	
8	69140068		
9	69140067	wheel with belt Mode	
10	34010026	Spindle Motor Encoder 24v 30RPM	

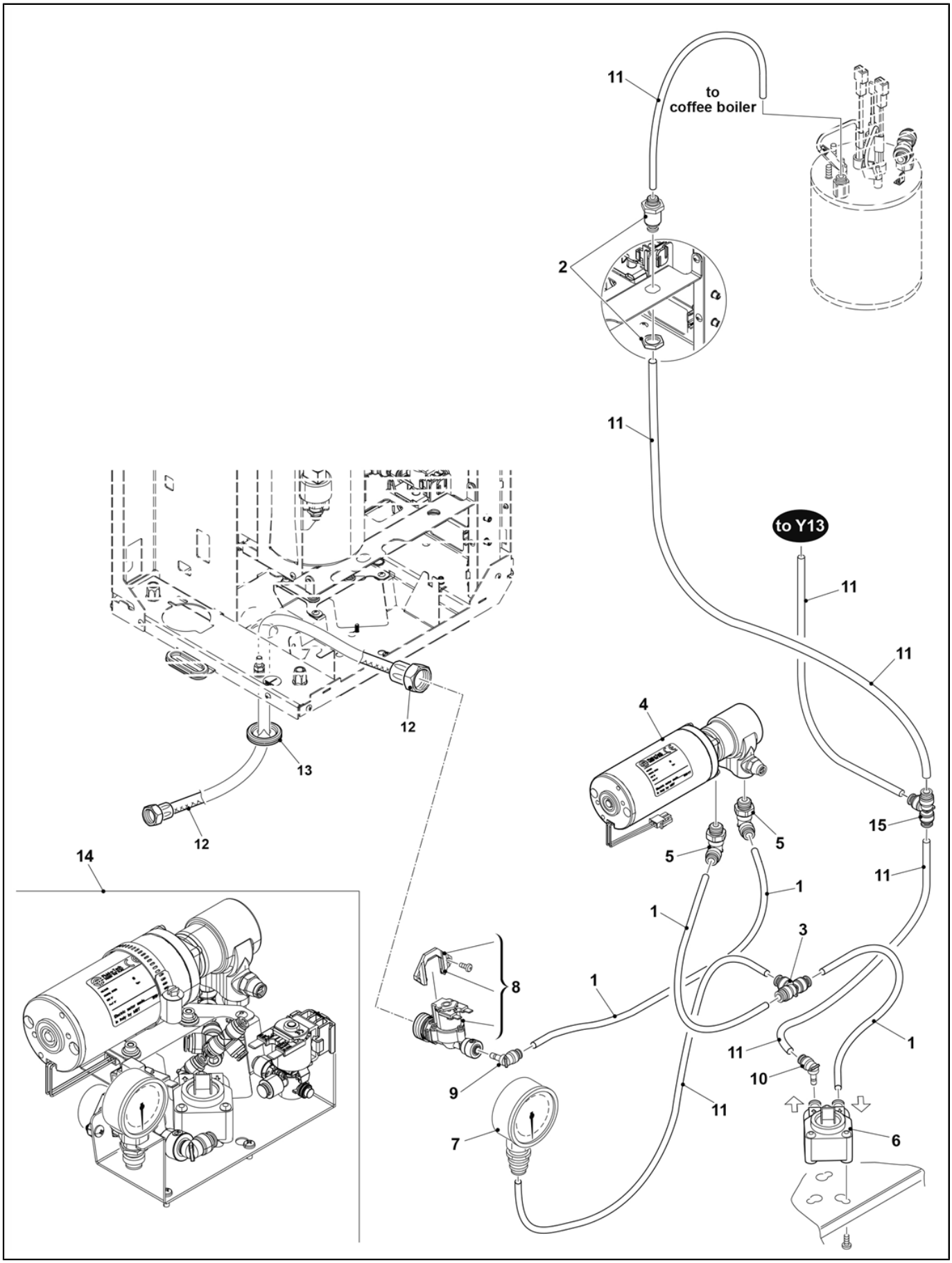
11
to
coffee boiler
2
11
to Y13
11
11
4
12
13
12
15
5
5
14
11
1
1
3
8
1
11
1
10
9
11
7
6

Pos.	Code	Description	Notes
1	38228073	Teflon Hose Fep D. 6 X 4	
2	69200181	Straight Connector 4X4 X14	
3	00100897.001	T - Connectord. 6 X 4 X 6 Mm	
4	34011041	Pump Zero Plus 24V	
5	69200154	Elbow Connector 6 X G1/4 X 1,78 Ppsu	
6	34070377	Flowmeter	
7	35002513	Manometer Pumpe 0-16	
8	34040216	Solenoid valve 2/2 24v d10	
9	69200188	Elbow Connector 4Ff D6 Ppsu	
10	69200188	Elbow Connector 4Ff D6 Ppsu	
11	38228072	Teflon Hose Fep D. 4,0 X 2,5	
12	69001221	Flex Pipe Mm1500 Nsf F3/8-F3/4 Check Valve	
13	34200319	Cableholder With Membrane	
14	13077081	Water Pump Assy.	
15	69200166	T Connector D.4 Ppsu	

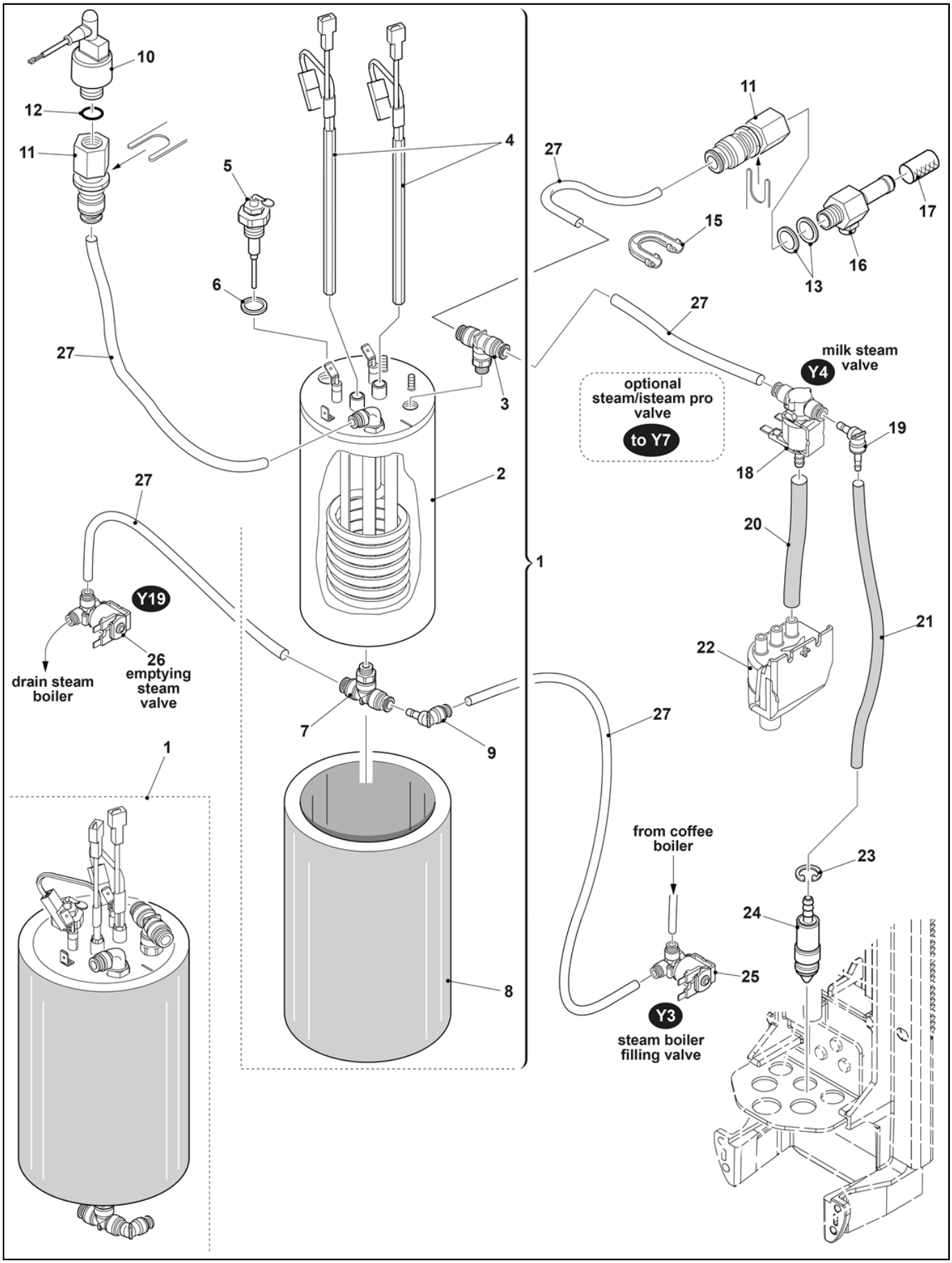
10
12
11
5
6
4
27
3
2
1
7
9
8
27
Y19
drain steam boiler
26
emptying steam valve
1
11
27
15
17
16
13
27
milk steam valve
Y4
optional steam/isteam pro valve
to Y7
19
18
20
21
22
27
from coffee boiler
23
24
25
Y3
steam boiler filling valve

Pos.	Code	Description	Notes
1	10702041	Steam Boiler 230 Assy.	
2	10020048	Steam Boiler 230V 1500W 0,8L	
	10020049	Steam Boiler 120V 1400W 0,8L	
3	69200207	T connector 6xG1/8 PPSU	
4	34200402	Thermal Fuse 20a	
5	34200389	level sensor h75mm	
6	36404039	O-Ring 14 X 1,78 V 75Sh 2056	
7	69200207	T connector 6xG1/8 PPSU	
8	69001225	Boiler Insulation 0,8	
9	69200188	Elbow Connector 4Ff D6 Ppsu	
10	34200288	Pressure Sensor	
11	69200209	Straight Connector 6xG3/8 M14x1	
12	00058587	Gasket 15 X 7,2 X 2,1 Rubber Epdm Perox	
13	00019974	Gasket 14,8 X 9 X 2 Copper	
15	38120666	elbow guide D6	
16	00004473	Silicon Hose D. 14 X 9 Mm	
	00039067	Relief Valve, Steam	
	00055794	Wire Hose Clamp 159 Mm	
17	00003230	Insulationg Tube D. 16 Mm	
18	34040213	Solenoid valve 3/2 24v	
19	69200188	Elbow Connector 4Ff D6 Ppsu	
20	00004475	Silicon Hose D. 12 X 8 Mm	
21	00049209	Silicon Hose D. 7,0 X 3,0 Mm	
22	38120109	Drain Collector Lower Part	
	38120110	Drain Collector Upper Part	
23	00001951	Snap Ring D. 6 Inox	
24	10701023	Steam Injector Qm	
	10701024	Steam Injector Tm/Qmpro	
25	34040217	Solenoid Valve 1.2 24V	
26	34040214	Solenoid valve 2/2 24v d2,5	
27	38228073	Teflon Hose Fep D. 6 X 4	

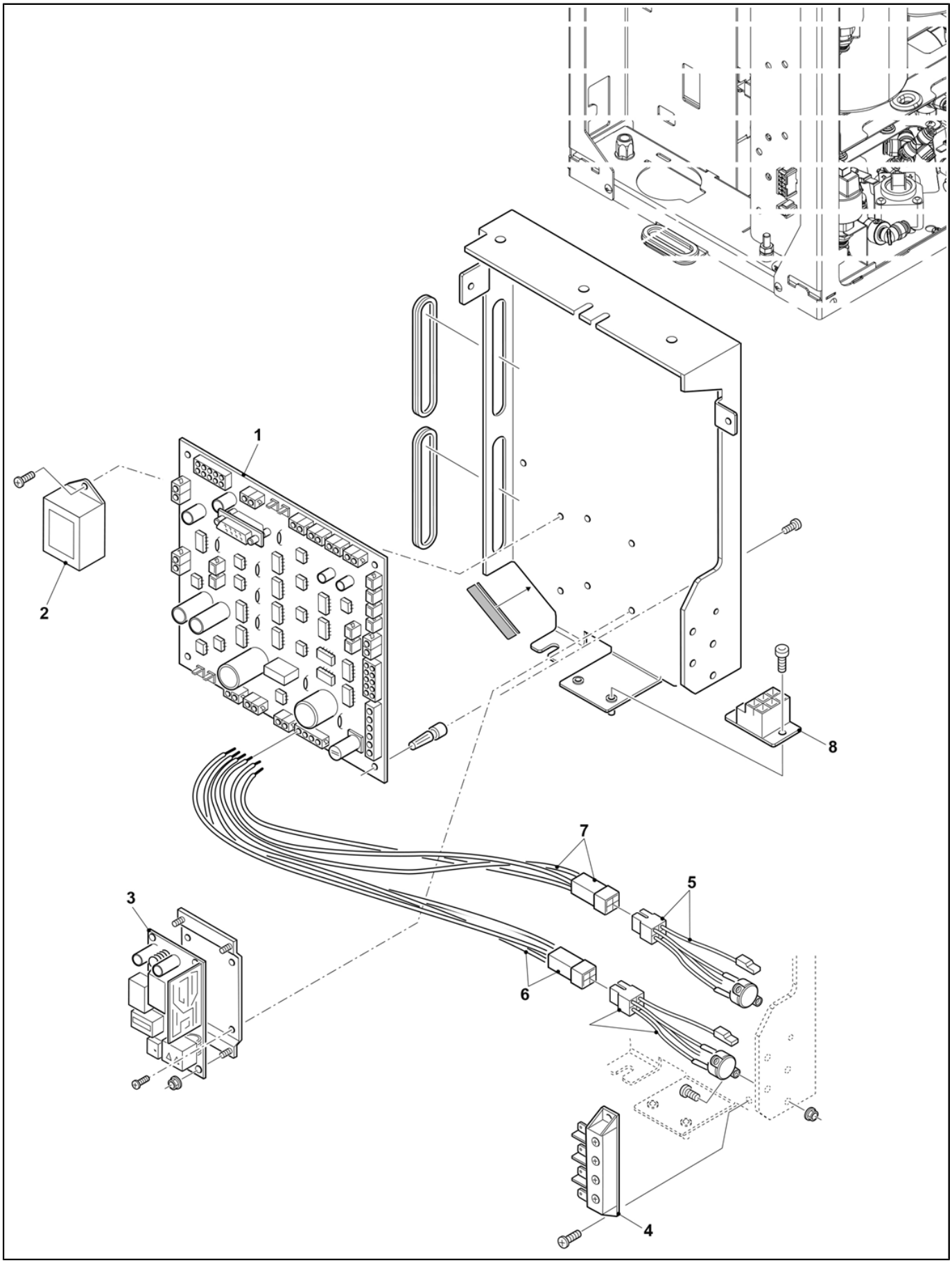
1
2
3
4
5
6
7
8

Pos.	Code	Description	Notes
1	101000006	Kit Cpu Mode	
2	34021017	Emc Filter	
3	34070385		
4	34150026	Clamp 4 Position	
5	10701053	Kit Triac Zero	
6			
7			
8			

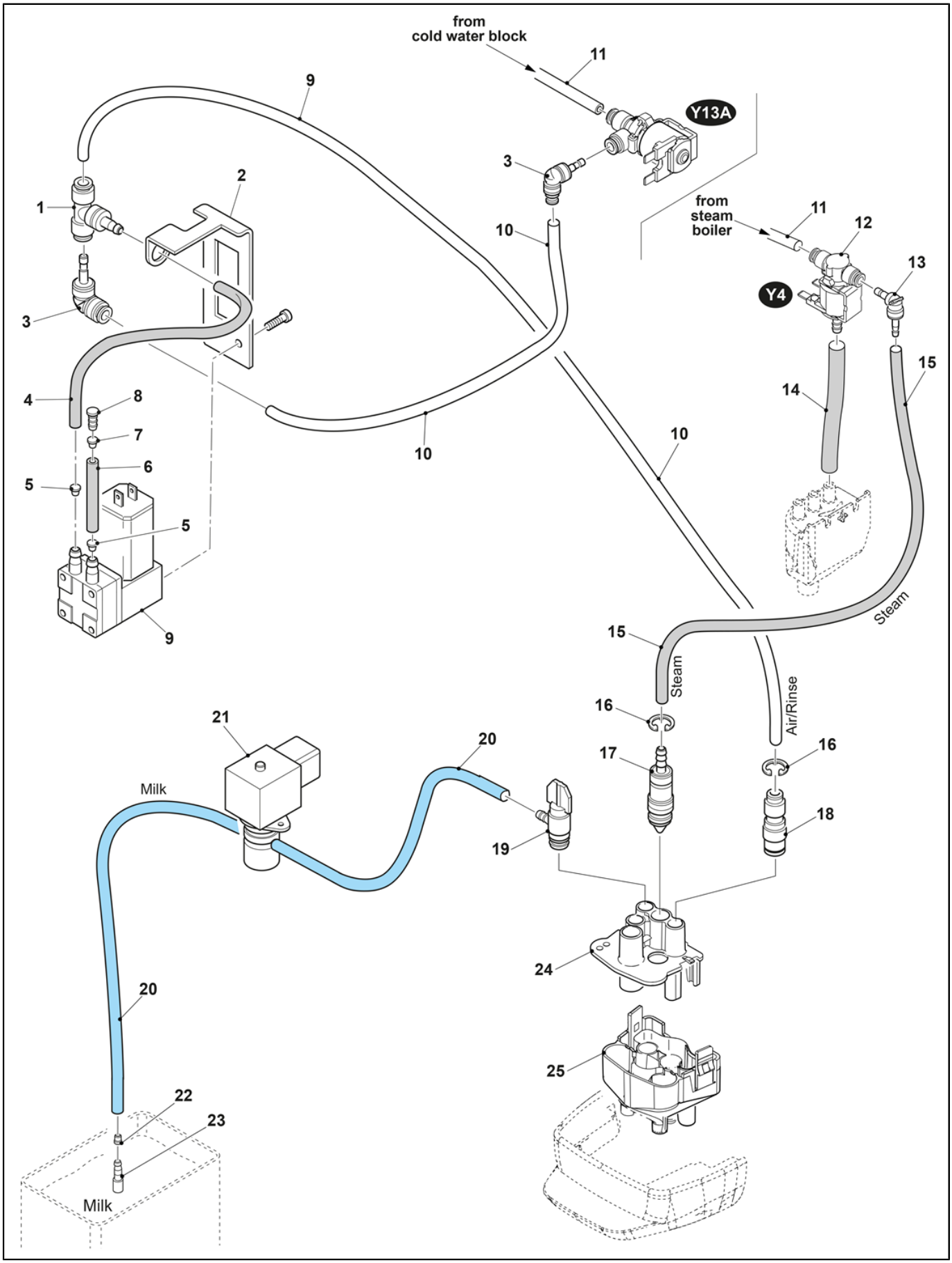
from
cold water block
11
9
Y13A
3
2
1
10
from
steam
boiler
11
12
13
Y4
3
15
14
4
8
7
10
10
6
5
5
9
15
Steam
Steam
Air/Rinse
16
21
20
17
16
Milk
18
19
24
20
25
22
23
Milk

EGRO
BUILT FOR EXCELLENCE

Pos.	Code	Description	Notes
1	69200128	T Fast Connector With Check Valve	
2	32332510		
3	69200160	Elbow Connector 4 X 4 Ppsu	
4	00049209	Silicon Hose D. 7,0 X 3,0 Mm	
5	38120127	Restriction Ring Little White	
6	00049209	Silicon Hose D. 7,0 X 3,0 Mm	
7	38120127	Restriction Ring Little White	
8	69150018	Filter Airpump Nms	
9	34011038A	Air Pump 24Vdc/16	
10	38228072	Teflon Hose Fep D. 4,0 X 2,5	
11	38228072	Teflon Hose Fep D. 4,0 X 2,5	
12	34040213	Solenoid valve 3/2 24v	
13	39930003	Wire Hose Clamp 76Mm	
	69200188	Elbow Connector 4Ff D6 Ppsu	
	69200189	Connector D4 Ppsu	
14	00004474	Silicon Hose D. 8 X 5 Mm	
15	38228072	Teflon Hose Fep D. 4,0 X 2,5	
16	00001951	Snap Ring D. 6 Inox	
17	10701023	Steam Injector Qm	
18	10701018	Injector Nms	
19	10701021	Milk Injector Quick Milk/14	
20	00060162	Silicon Hose Blue (Kb) 50Shore D. 7,0 X 4,0 Mm	
21	341000028		
	690300022	PINCH VALVE MODE	
22	38120128	Restriction Ring Big Black	
23	10700005	Reduction Kit	
24	38120128	Restriction Ring Big Black	
25	38120277	Coffee Outlet Lower Part D.6,3	

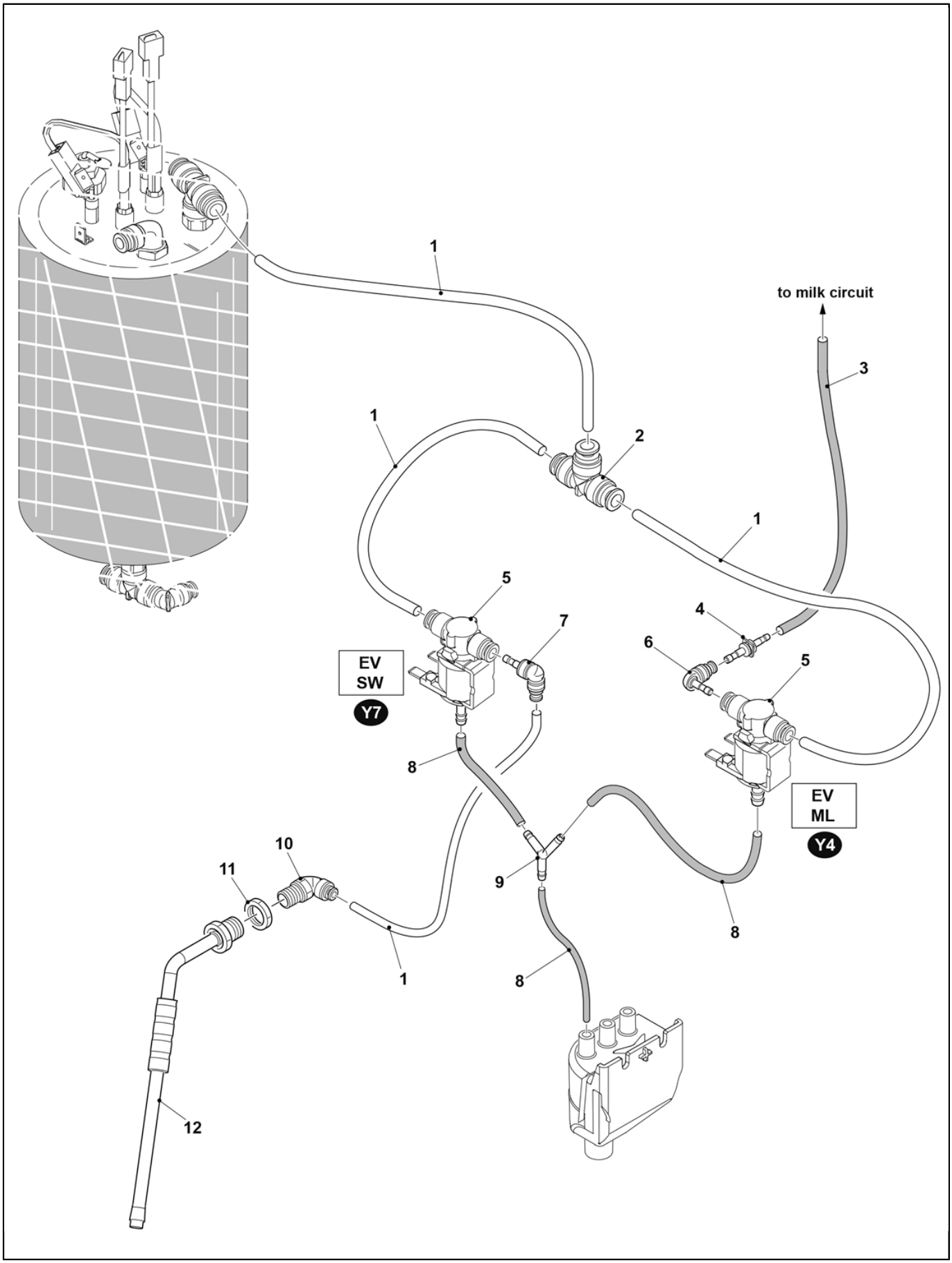
1
to milk circuit
3
1
2
1
5
7
4
6
5
EV
SW
Y7
8
EV
ML
Y4
10
11
9
8
1
8
12

Pos.	Code	Description	Notes
2	10020048	Steam Boiler 230V 1500W 0,8L	
	10020049	Steam Boiler 120V 1400W 0,8L	
3	69200207	T connector 6xG1/8 PPSU	
4	34200402	Thermal Fuse 20a	
5	34200068	Level Probe Assembly 70	
6	00002240	O-Ring 14 X 1,78 Epdm 70Sh	
7	69200188	Elbow Connector 4Ff D6 Ppsu	
	69200207	T connector 6xG1/8 PPSU	
8	69001225	Boiler Insulation 0,8	
9	38228073	Teflon Hose Fep D. 6 X 4	
10	34200288	Pressure Sensor	
11	00039067	Relief Valve, Steam	
12	34040218	solenoid valve 2/2 D.1,2 24V x2	
13	69200188	Elbow Connector 4Ff D6 Ppsu	
	69200189	Connector D4 Ppsu	
14	00004474	Silicon Hose D. 8 X 5 Mm	
15	00049209	Silicon Hose D. 7,0 X 3,0 Mm	
	38228073	Teflon Hose Fep D. 6 X 4	
16	38120109	Drain Collector Lower Part	
	38120110	Drain Collector Upper Part	
17	00001951	Snap Ring D. 6 Inox	
18	10701023	Steam Injector Qm	
19	34040218	solenoid valve 2/2 D.1,2 24V x2	

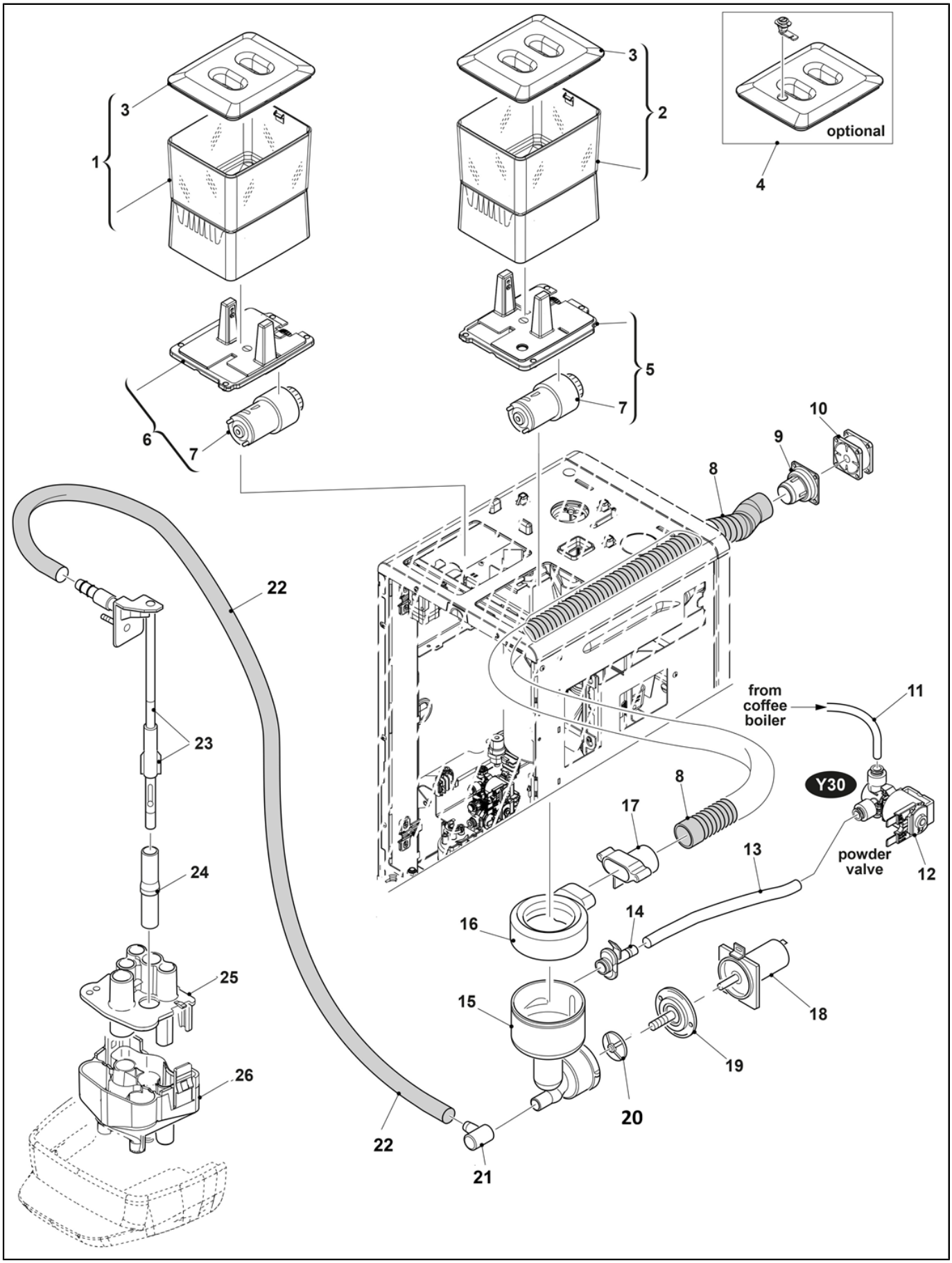
1
2
3
4
5
6
7
8
9
10
11
12
13
14
15
16
17
18
19
20
21
22
23
24
25
26
optional
from coffee boiler
Y30
powder valve

Pos.	Code	Description	Notes
1	10701891	Left Powder Hopper Assy.	
2	10701890	Right Powder Hopper Assy.	
3	38120447	Powder Hopper Lid	
4	10702076		
5	10701892	Righ Powder Motor Assy.	
6	10701893	Left Powder Motor Assy.	
7	34010025	Powder Hopper Motor 24V	
8	36901803	Suction Pipe 29,6 X 25	
9	38120146	Fun Adapter Powder Module	
10	10120250	Fan Wit Connector	
11	38228072	Teflon Hose Fep D. 4,0 X 2,5	
12	34040217	Solenoid Valve 1.2 24V	
13	38228072	Teflon Hose Fep D. 4,0 X 2,5	
14	10701948	adapter mixer quick fit black assy.	
15	10701947	Mixing Chamber Assy.	
16	38120425	upper ring mixing chamber	
17	38120145	Mixer Manifold Powder Module	
18	10701945	Motor Mixer Assy.	
19	10701946	Fixing Block Mixer Assy.	
20	38120461	fan mixer	
21	38120423	elbow outlet pipe mixing chamber	
22	00004473	Silicon Hose D. 14 X 9 Mm	
23	38120419	Upper Part Powder Pipe NMS+	
24	38120215	Lower Powder Pipe	
25	10701391	Standard Spout D. 6.3Mm	
	38120210	Upper Spout Nms	
26	10701391	Standard Spout D. 6.3Mm	
	38120277	Coffee Outlet Lower Part D.6,3	

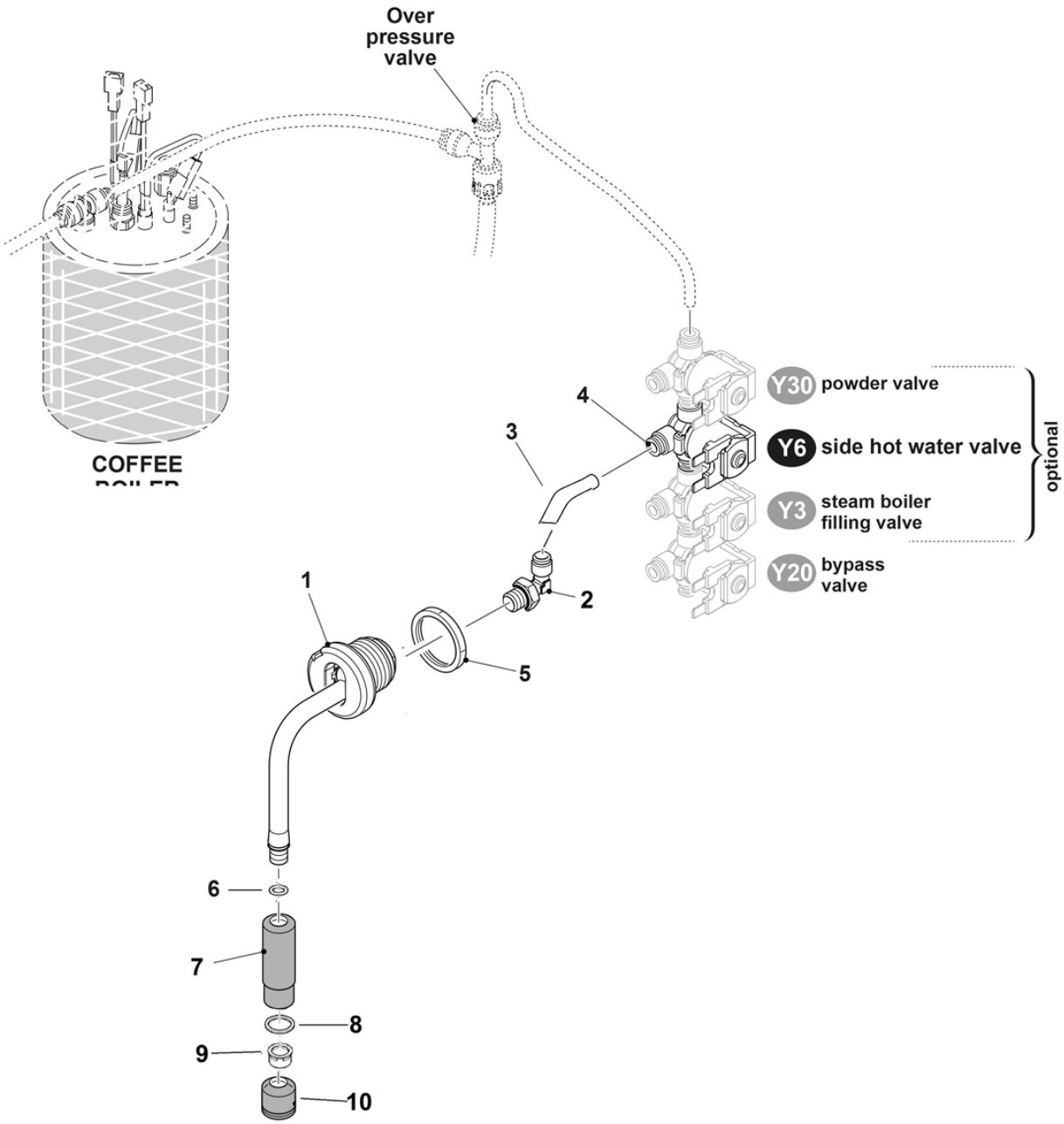
Over pressure valve
COFFEE
Y30 powder valve
Y6 side hot water valve
Y3 steam boiler filling valve
Y20 bypass valve
optional
1
2
3
4
5
6
7
8
9
10

Pos.	Code	Description	Notes
1	100300027		
2	69200139	Elbow Connector 4 X G1/8 Ppsu	
3	38228072	Teflon Hose Fep D. 4,0 X 2,5	
4	34040217	Solenoid Valve 1.2 24V	
5	23000521	nut m26x1,5	
6	36301050	O-Ring 6.4X1.9	
7	38120697	Handle water wand Mode	
8	36301049	O-Ring Gasket water sprayer	
9	100600030		
10	230100025		

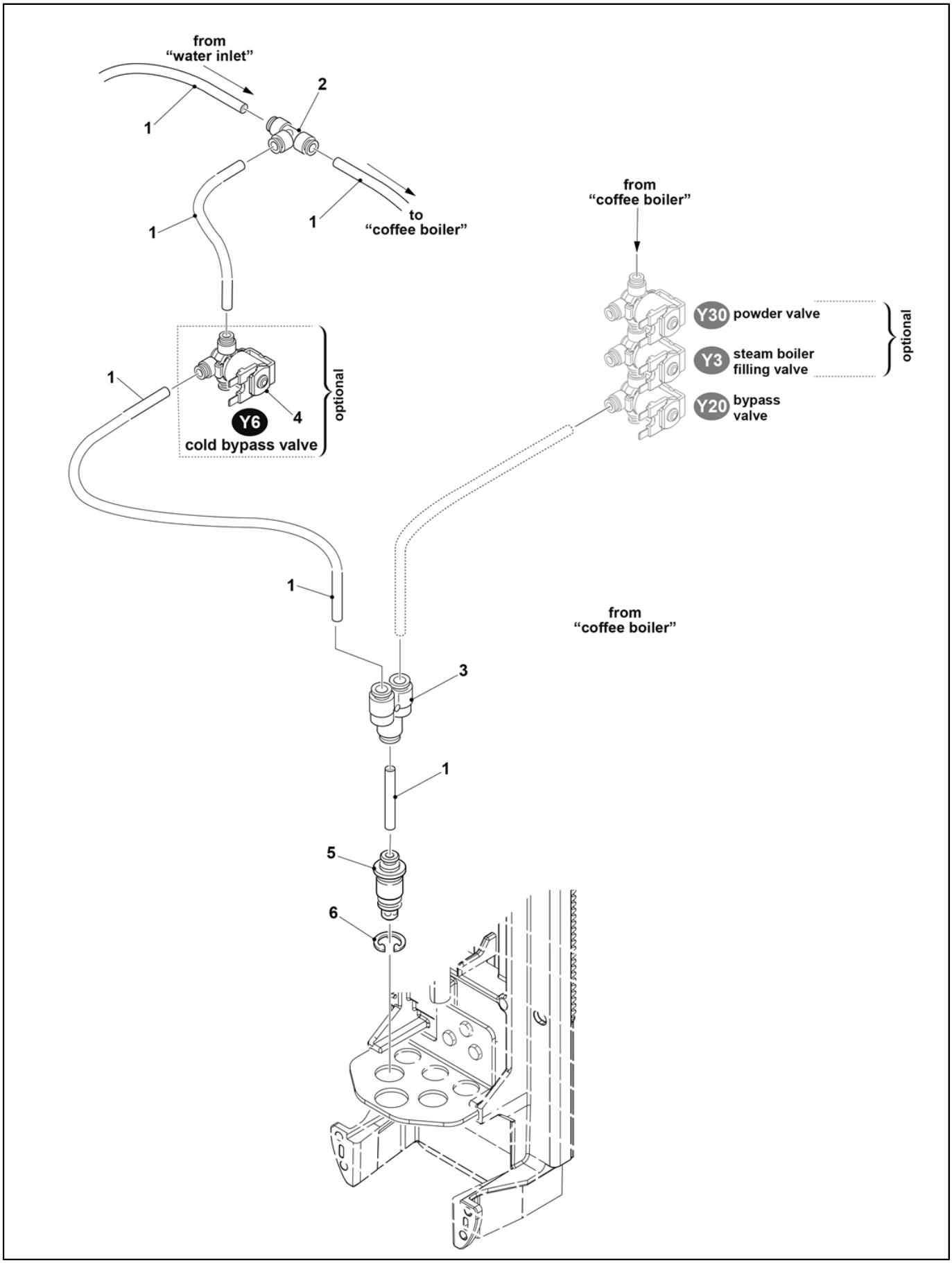
from
"water inlet"
1
2
1
1
to
"coffee boiler"
from
"coffee boiler"
Y30 powder valve
Y3 steam boiler filling valve
Y20 bypass valve
optional
1
Y6
4
cold bypass valve
optional
1
from
"coffee boiler"
3
1
5
6

Pos.	Code	Description	Notes
1	38228072	Teflon Hose Fep D. 4,0 X 2,5	
2	69200166	T Connector D.4 Ppsu	
3	69200187	Y Connector D.4 Ppsu	
4	34040217	Solenoid Valve 1.2 24V	
5	10701019	Central Injector/14	
6	37521001	Snap Ring D. 10	

Alphanumeric index

Code	No. table	Pos.
	3000	6
	3000	7
	3000	8
00000928	2001	33
00000928	2001_2	33
00000935	2001	12
00000935	2001_2	12
00001074	2001	7
00001074	2001_2	7
00001176	2001	11
00001176	2001_2	11
00001951	2005	23
00001951	4000	16
00001951	5001	17
00002240	5001	6
00003230	2005	17
00004473	2005	16
00004473	5002	22
00004474	4000	14
00004474	5001	14
00004475	2000	14
00004475	2005	20
00019974	2005	13
00039064	2001	15
00039067	2005	16
00039067	5001	11
00048548	2001	20
00048548	2001_2	20
00048550	2001	23
00048550	2001_2	23
00049209	2005	21
00049209	4000	4
00049209	4000	6
00049209	5001	15
00055794	2005	16
00057446	2001	1
00058587	2005	12
00060116	2001	13
00060162	4000	20
00060283	2001	21
00060283	2001_2	21
00100136.001	2001	16
00100186.013	2000	22
00100506.001	2001	18
00100897.001	2003	3
10020046	2000	2
10020047	2000	2
10020048	2005	2
10020048	5001	2
10020049	2005	2
10020049	5001	2
100300027	5003	1
10054008	2001	1
10054011	2001_2	1
100600010	1001	14
100600010R	2002	4
100600020	1000	21
100600030	5003	9
101000003	1001	9
101000006	3000	1
101000008	2001_2	34
101000038	2001_2	25
101000038	2001_2	34
10120248	1000	1
10120250	5002	10
10700005	4000	23
10700176	2001	31

Code	No. table	Pos.
10700177	2001	10
10700192	2001	4
10700192	2001_2	4
10701007	2001_2	31
10701008	2001_2	10
10701018	4000	18
10701019	2000	19
10701019	5004	5
10701020	2000	21
10701021	4000	19
10701023	2005	24
10701023	4000	17
10701023	5001	18
10701024	2005	24
10701036	2001	8
10701050	2001	19
10701050	2001_2	19
10701051	2001	34
10701053	3000	5
10701391	1001	2
10701391	5002	25
10701391	5002	26
10701591	2001_2	1
10701888	2002	5
10701889	2002	6
10701890	5002	2
10701891	5002	1
10701892	5002	5
10701893	5002	6
10701904	2001_2	8
10701906	1000	25
10701908	1000	1
10701945	5002	18
10701946	5002	19
10701947	5002	15
10701948	5002	14
10702041	2005	1
10702042	2000	1
10702076	5002	4
10705750	1000	22
10706109	2002	7
10706111	2002	7
10781314	1000	24
13077081	2003	14
21000021A	1001	11
23000463	2000	3
23000521	5003	5
230100025	5003	10
240100002	2001	25
25217018	2000	5
32331443	2001	32
32331443	2001_2	32
32332510	4000	2
32332529	2001	6
32332529	2001_2	6
32551589A	1000	11
32551590A	1000	10
32551600A	1000	11
32551600A	1000	20
340100004	2001	29
340100004	2001_2	34
34010025	5002	7
34010026	2002	10
34011038A	4000	9
34011041	2003	4
34020125	2001	24
34020125	2001	30

Code	No. table	Pos.
34020125	2001_2	24
34020125	2001_2	30
34020138	1000	18
34020138	1000	19
34021017	3000	2
34040213	2005	18
34040213	4000	12
34040214	2005	26
34040215	2000	15
34040216	2003	8
34040217	2000	18
34040217	2005	25
34040217	5002	12
34040217	5003	4
34040217	5004	4
34040218	5001	12
34040218	5001	19
34070377	2003	6
34070381	2000	9
34070385	3000	3
341000028	4000	21
34100026	1000	28
34150026	3000	4
34200068	5001	5
34200288	2005	10
34200288	5001	10
34200319	1000	12
34200319	2003	13
34200359	2000	23
34200389	2005	5
34200398	1000	4
34200402	2000	8
34200402	2005	4
34200402	5001	4
35002513	2003	7
36201037	2001_2	15
36301049	5003	8
36301050	5003	6
36322004	2001	2
36322004	2001_2	2
36322011	1000	13
36402003	2000	4
36404024	2001_2	16
36404039	2005	6
36404065	1000	22
36404066	2001_2	18
36901803	5002	8
36930022	2001	14
36930022	2001_2	14
36930110	2001	17
36930111	2001	38
36930117	2001_2	17
36930118	2001_2	38
36990125	1000	9
37040409	2001	3
37040409	2001_2	3
37521001	2000	20
37521001	5004	6
37900115	1001	7
38120109	2000	17
38120109	2005	22
38120109	5001	16
38120110	2000	16
38120110	2005	22
38120110	5001	16
38120127	4000	5
38120127	4000	7

Alphanumeric index

Code	No. table	Pos.
38120128	4000	22
38120128	4000	24
38120145	5002	17
38120146	5002	9
38120210	1001	3
38120210	5002	25
38120215	5002	24
38120277	1001	4
38120277	4000	25
38120277	5002	26
38120419	5002	23
38120420	1000	15
38120423	5002	21
38120425	5002	16
38120430	1000	15
38120439	2002	1
38120440	1000	5
38120441	1000	7
38120447	5002	3
38120450	2002	2
38120450L	2002	3
38120452	1000	9
38120453	1000	3
38120455	1000	8
38120461	5002	20
38120609	1001	1
38120611	2000	12
38120666	2005	15
38120697	5003	7
38120700	1000	21
38120702	2001	27
38120702	2001_2	27
38120703	2001	28
38120703	2001_2	28
38120707	1000	26
38120708	1000	27
38120710	1001	5
38120710L	1001	5
38120722	1001	10
38221018	1000	14
38221026	1000	2
38228072	2000	24
38228072	2003	11
38228072	4000	10
38228072	4000	11
38228072	4000	15
38228072	5002	11
38228072	5002	13
38228072	5003	3
38228072	5004	1
38228073	2003	1
38228073	2005	27
38228073	5001	15
38228073	5001	9
38910002	1000	21
39110062	1001	6
39110088	2001	5
39110088	2001_2	5
39110089	2001	26
39110089	2001_2	26
39930003	4000	13
40200013	2001_2	13
45010384	1001	8
69000287	1001	15
69000319	1001	15
69000424	1001	12
69001221	2003	12

Code	No. table	Pos.
69001224	2000	6
69001225	2005	8
69001225	5001	8
69001226	1000	17
69001227	1000	16
690300022	4000	21
69140067	2002	9
69140068	2002	8
69150018	4000	8
69200128	4000	1
69200133	2001	22
69200133	2001_2	22
69200139	5003	2
69200154	2003	5
69200160	4000	3
69200166	2003	15
69200166	5004	2
69200173	2000	10
69200181	2003	2
69200187	5004	3
69200188	2003	10
69200188	2003	9
69200188	2005	19
69200188	2005	9
69200188	4000	13
69200188	5001	13
69200188	5001	7
69200189	4000	13
69200189	5001	13
69200204	2000	13
69200207	2000	7
69200207	2005	3
69200207	2005	7
69200207	5001	3
69200207	5001	7
69200208	2000	11
69200209	2005	11

Contacts

HEADQUARTERS, PRODUCTION PLANT AND R&D CENTERS

Rancilio Group s.p.a.
Viale della Repubblica 40
20010 Villastanza di Parabiago
Milano - Italy
Tel +39 0331 408200
Fax +39 0331 551437
www.ranciliogroup.com
info@ranciliogroup.com

Egro Suisse AG
Bahnhofstrasse 66
5605 Dottikon - Switzerland
Tel. +41 (0)56 616 95 95
Fax +41 (0)56 616 95 97
www.egrocoffee.com
info@egrocoffee.com

WORLDWIDE BRANCH LOCATIONS

SPAIN
RancilioGroup Espana, s.a.
Gran Vía de Carlos III, 84 3ª
Edificio Trade
08028 Barcelona - Spain
Ph. +34 902 884 275
Ph. +34 934 923 414
Fax +34 934 965 701
www.ranciliogroup.com
info-es@ranciliogroup.com

PORTUGAL
Rancilio Group Portugal Lda
Estrada da Falagueira nº 68 E
2700-365 Amadora-Lisboa - Portugal
Ph. + 351 21 019 10 91
Fax + 351 21 019 10 91

Rua Nova do Seixo 1282
4465-706 Leca do Balio-Porto - Portugal
Ph. + 351 22 010 14 19
Fax + 351 22 010 14 19
www.ranciliogroup.com
info-pt@ranciliogroup.com

GERMANY
Rancilio Group Deutschland GmbH
Talstrasse 27
97990 Weikersheim - Germany
Ph. +49 7934 99 29 30
Fax +49 7934 99 29 330
www.ranciliogroup.de
info-de@ranciliogroup.com

SWITZERLAND
Egro Suisse AG
Bahnhofstrasse 66
5605 Dottikon - Switzerland
Tel. +41 (0)56 616 95 95
Fax +41 (0)56 616 95 97
www.egrosuisse.ch
info@egrosuisse.ch

USA/CANADA
RancilioGroup North America Inc.
1340 Internationale Parkway / Suite 200
Woodridge, IL 60517 - U.S.A.
Ph: +1 630 914 7900
Fax: +1 630 914 7901
Toll Free: +1 877 726 2454
www.ranciliogroup.com
info@ranciliogroupna.com