RANCILIO

coffeeing the World

C5S1 v.43

SPARE PARTS CATALOGUE

en-US

CLASSE 5 S 1GR

CLASSE 5

Index

Table 1000_5 - Housing 1gr S/ST....4
Table 2007 - STEAM TAP....6
Table 2008 - WATER TAP....8
Table 2004_1 - GRUPPO EROGAZIONE 1gr....10
Table 2003_2 - BOILER 1gr....12
Table 2001_2 - IMPIANTO IDRAULICO 1GR S....14
Table 3001_2 - PARTI ELETTRICHE/ELETTRONICHE 1GR S/S-TANK....16
Table 4000 - Clever Steam Tap....18
Alphanumeric index....20

1000_5

Housing 1gr S/ST

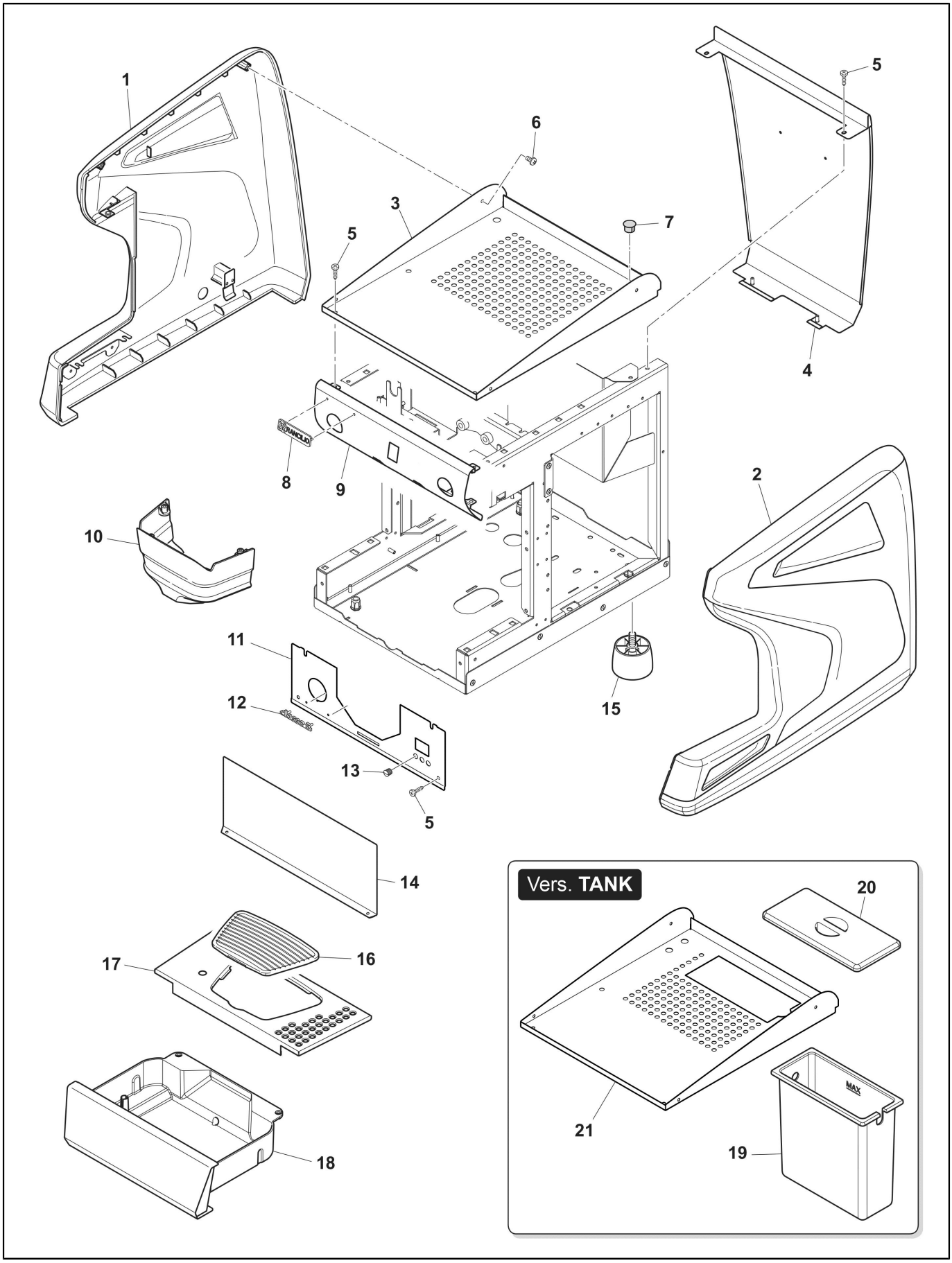

1000_5

Housing 1gr S/ST

POS.	CODE	DESCRIPTION	NOTES
1	10701188	Side Panel Left Black Classe 5-7/16	
	10701260	Side Panel Left White Classe 5-7/16	
2	10701187	Side Panel Right Black Classe 5-7/16	
	10701259	Side Panel Right White Classe 5-7/16	
3	32332043	Top Lid Classe 5 1Gr	
4	32332048	Rear Panel Classe 5 1Gr	
	42200122	Rancilio Plate Mm115	
5			
6			
7			
8	42200121	Rancilio Plate Mm 70	
9	32332040	Control Panel 1Classe S Gr 5 S	
10	38120300	Group Cover C5 Comp-1Gr	
11	32332041	Upper Front Panel 1Gr Classe 5	
12	42200140	Plate C5	
13	38120328	Orange Glass Classe 5 1Gr	
	38120329	Green Glass Classe 5 1Gr	
14	32332042	Lower Front Panel 1Gr C5	
15	38123568	Machine Foot	
	38123852	Riser For Machine Foot	
16	38120591	Cup Tray Grid Black	
17	32332047	Cup Tray Grid/17 1Gr Classe 5	
18	10701002	Drain Tray 1Grv Usb-S	
	10701004	Drain Tray 1Grv St	
	36990037	Drain Tray Cap Zero	
	38120326	Level Floating 1Gr Classe 5	
19	38120335	Water Tank 2L	
20	38123011	Lid	
21	32332044	Top Lid Classe 5 1Gr St	

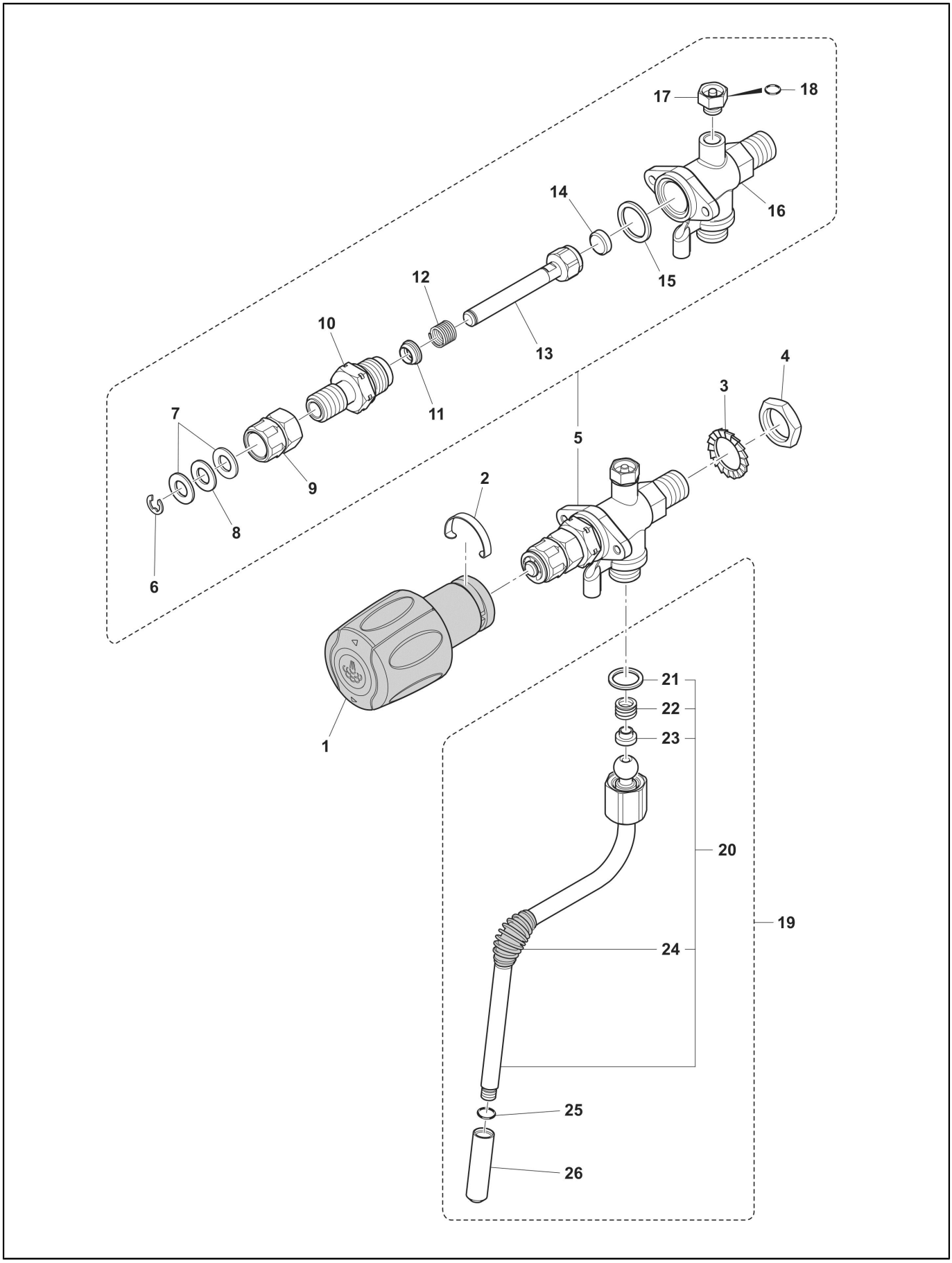
17
18
14
16
15
12
10
13
4
3
7
11
5
9
2
8
6
1
21
22
23
20
19
24
25
26

POS.	CODE	DESCRIPTION	NOTES
1	10060189	Steam Tap/16	
2	32210001	Steam Handle Spring	
3	37431600	Outer Toothed Washer D16	
4	26220005	Flat Nut 3/8	
5	10060149	Steam Tap+Av Valve	
6	37510700	Snap Ring D. 7	
7	32239044	New Steam Cock Washer	
8	36230001	Teflon Washer	
9	23220029	Reg Bush For New Cock	
10	23000302	Stem Guide Ptfe	
11	36990078	Shaft Gasket Fast Tap	
12	39110035	Water-Steam Cock Spring	
13	10060002	Rod+Nut And Steam Cock Gasket	
14	36301105	Gasket For Nut Steam Tap Epdm	
15	27400001	Gasket Copper Compass Re Group	
16	10701621	Steam Tap Body With Av. Valve/19	
17	10705180	Kit Av Valve Steam Tap	
18	36404058	O-Ring 3.68 X 1.78 Epdm 70Sh Teflon	
19	10706034	Steam Pipe+Joint Lg.25 Inox	
20	10049112	Steam Pipe Inox Lg 25	
21	36220009	Gasket Nut Note Teflon	
22	39110038	Spring Connection Steam Tap	
23	36930016	Gasket Teflon Connection Steam Wand	
24	36990004	Rubber For Steam Pipes	
25	36301050	O-Ring 6.4X1.9	
26	23000121	Sprayer Lg25 D1.1 4Holes	
	23000121	Sprayer Lg25 D1.1 4Holes	
27	36930017	Teflon Gasket For Steam Wand Nut	

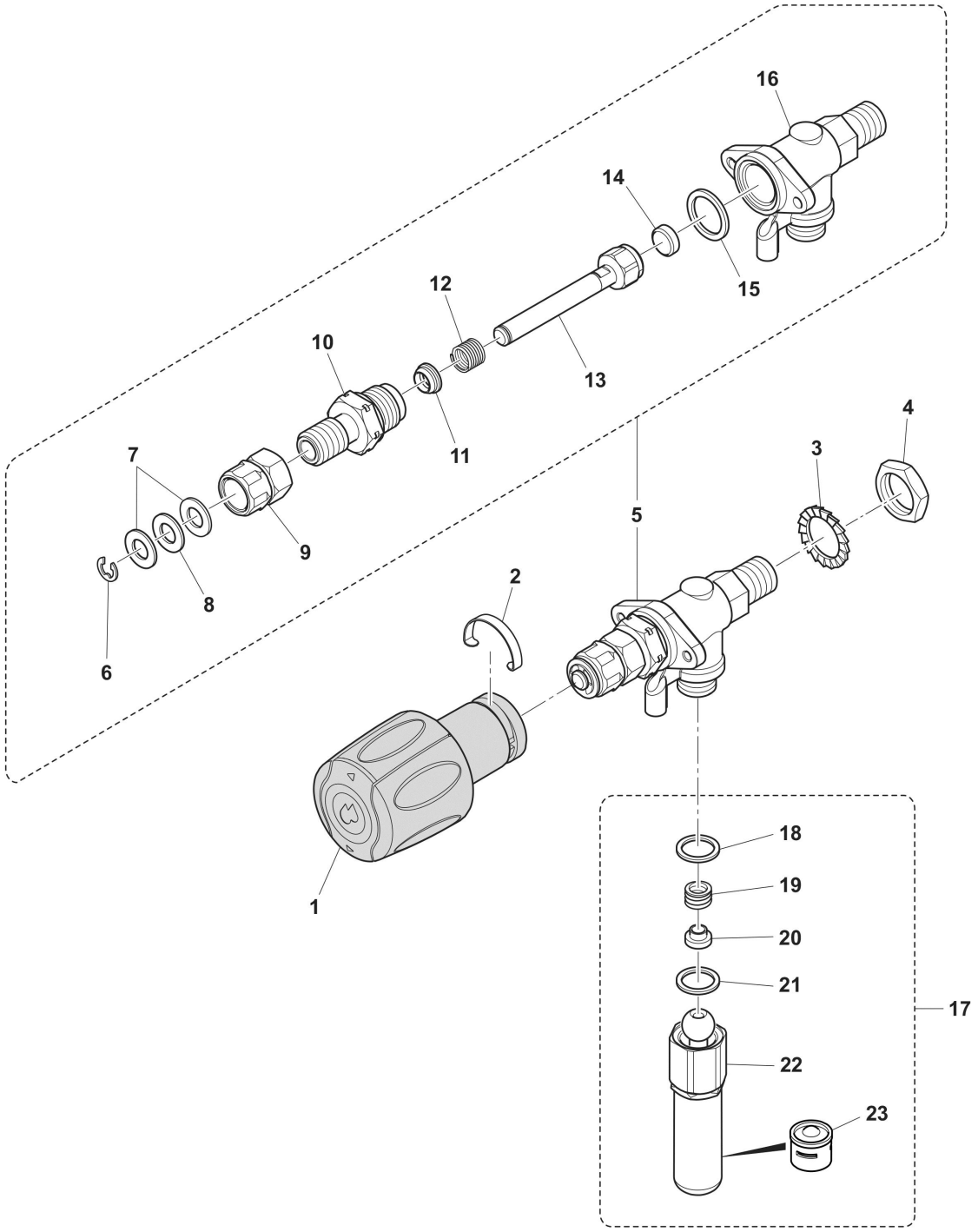
16
14
15
12
10
13
11
4
3
7
5
9
2
8
6
1
18
19
20
21
17
22
23

POS.	CODE	DESCRIPTION	NOTES
1	10060188	Hot Water Tap Handle/16	
2	32210001	Steam Handle Spring	
3	37431600	Outer Toothed Washer D16	
4	26220005	Flat Nut 3/8	
5	10060153	Water Tap	
6	37510700	Snap Ring D. 7	
7	32239044	New Steam Cock Washer	
8	36230001	Teflon Washer	
9	23220029	Reg Bush For New Cock	
10	23000302	Stem Guide Ptfe	
11	36990078	Shaft Gasket Fast Tap	
12	39110035	Water-Steam Cock Spring	
13	10060002	Rod+Nut And Steam Cock Gasket	
14	36301105	Gasket For Nut Steam Tap Epdm	
15	27400001	Gasket Copper Compass Re Group	
16	10060023	Steam Tap Body With Bush+A.V. Valve	
17	10701406	Hot Water Wand+Extension Classe 5	
	10701409	LANCIA ACQUA C5 ETL-AI-	
18	36220009	Gasket Nut Note Teflon	
19	39110038	Spring Connection Steam Tap	
20	36930016	Gasket Teflon Connection Steam Wand	
21	36930017	Teflon Gasket For Steam Wand Nut	
22	10049014	Water Outlet	ETL version
	10705799	ROMPISPRUZZO+SPRUZZATORE-AI-	
	23000373	Extension Water Wand Classe 5	
23	25135020	Water Sprayer Filter C7	

2004_1

GRUPPO EROGAZIONE 1gr

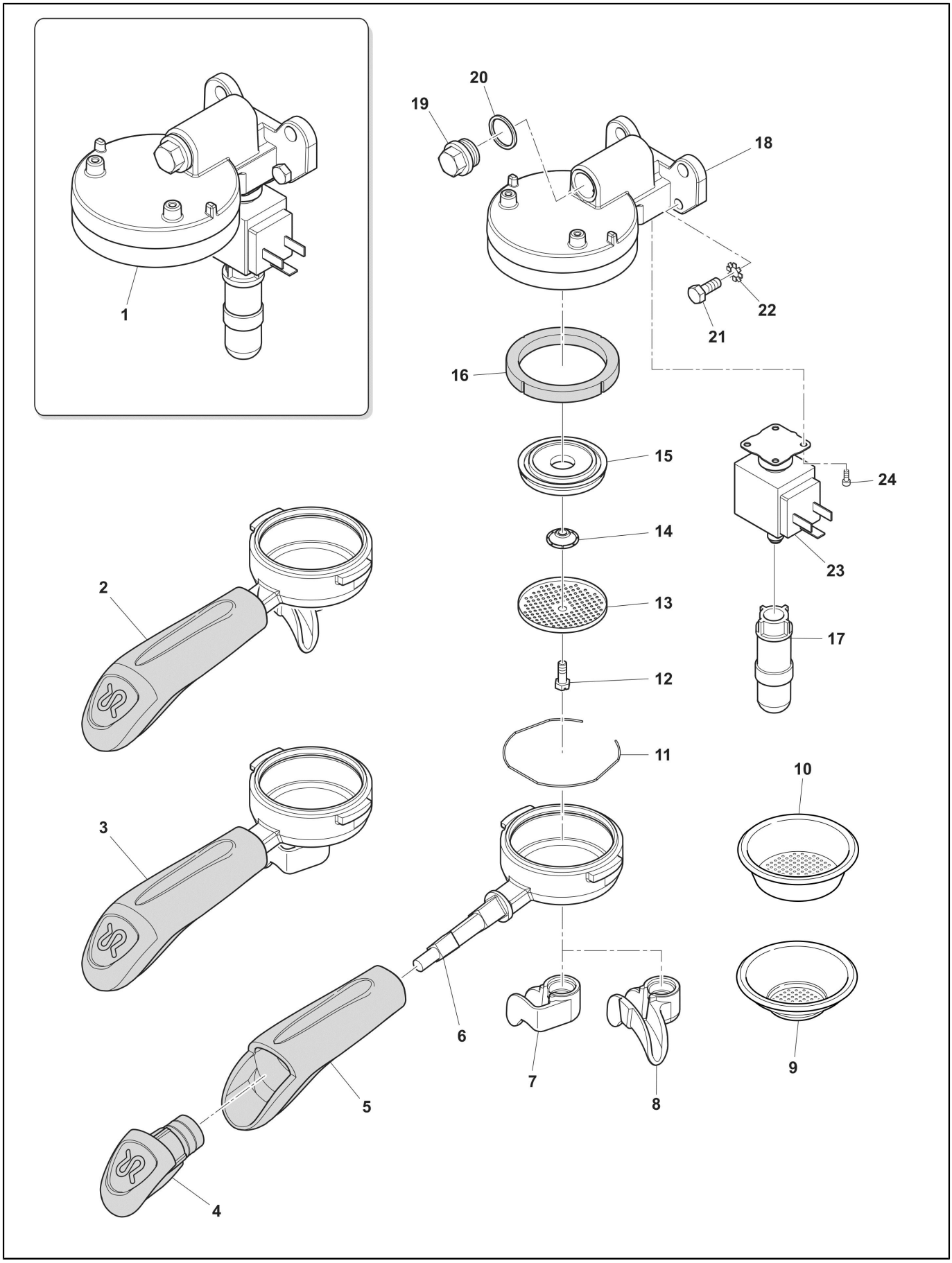

2004_1

GRUPPO EROGAZIONE 1gr

POS.	CODE	DESCRIPTION	NOTES
1	10051182	Brewing Group Epoca 1/Club 230V	
2	10071100	Filter-Holder No Beck	
	10071137R	Porta-Flter Rr/09 2Doses	
3	10071118R	Porta-Flter Rr/09 1Dose	
4	10705535	Filterholder Cap With Ring	
5	10705091	Kit Filter Holder Tap 07	
6	20112211	Filter Holder Body Mc/09	
7	21102601	1 Cup Beak Mc/09	
8	21100801	2 Cup Beak Mc/09	
9	40100106	8Gr Filter Inox	
10	40100107	16Gr Filter Inox	
11	25105007	Filter Spring	
12	37030518	Shower Screw	
13	40200005	Shower Net	
14	25139001	Group Jetbreaker	
15	20200182	Shower Holder Brass	
16	36301046	Group Gasket Perossidica Hp	
17	10090002	Therm.Group Jetbreaker	
18	20200042	Group Epoca 1Gr	
	36402001	O-Ring 6,07 X 1,78 Epdm 105	
19	20122653	Brewing Group Cap	
20	27400002	Gasket For Brewing Group Cap	
21	37040617	Screw M6 X 16	
	37040835	Screw M8 X 35 Te Fezn	
22	37430600	Toothed Washer D. 6	
23	34040149	Valve 3/2 220-240V Ul (Sirai)	
	34040150	Valve 3/2 110-120V 60Hz Ul (Sirai)	
24	37060413	Screw M 4 X 12	

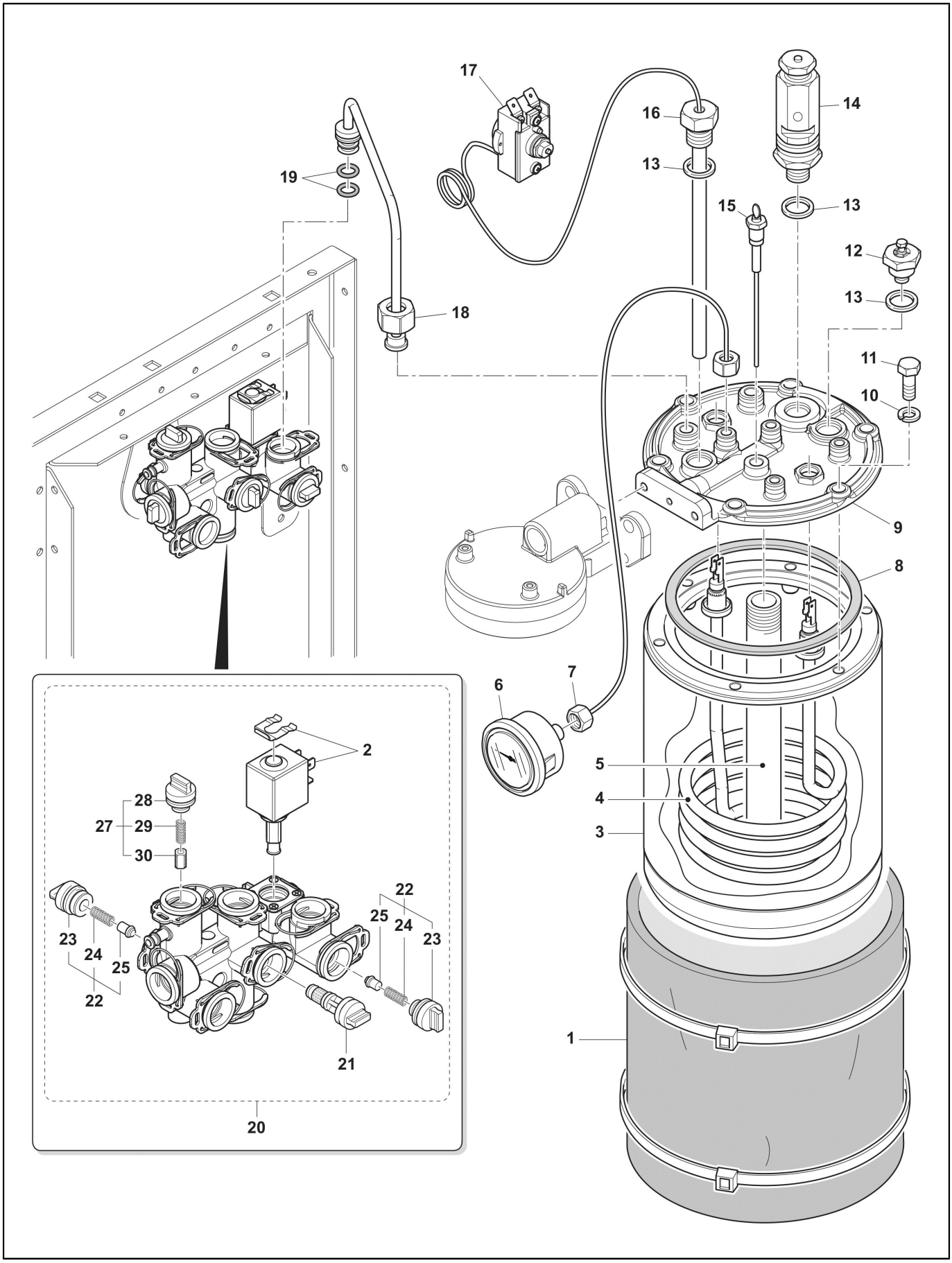
17
16
14
19
13
15
13
12
13
18
11
10
9
8
7
6
5
4
3
2
28
27
29
30
22
25
24
23
23
24
25
22
21
1
20

POS.	CODE	DESCRIPTION	NOTES
1	69000428	Boiler Insulation Vertical Boiler	
2	69140014	Operator Kit 220-240V Hydraulic Module	
	69140015	Operator Kit 110-120V Hydraulic Module	
3	10025015	Boiler Body	
4	33111013	Heating Element W.1200 V.110	
	33111015	Heating Element 120V 1600W	
	33122017	Heating Elementw.1700 V.230	
5	10030033	Heat Exchanger Epoca 1Gr/14	
6	35002512	Manometer Boiler Mc/15	
7	10041052	Pipe 4X3X400 F1/4-F1/8	
8	36220018	Gasket For Boiler	
9	10029306	Heating Exchanger With Cover	
10			
11	37040821	Screw M 8X22	
12	10060051	Antivacuum Valve With Weight	
13	27350003	Gasket 3/8 X 2 Copper	
14	10060525	Safety Valve 1,9Bar 3/8	
15	34200088	Level Probe Assembly	
16	10042129	Vertical Boiler Thermostat Sleeve	
17	34200354	High Limit Thermostat 165/15 110V Ul	
	34200355	High Limit Thermostat 165/15 220V	
18	10042144	Pipe 6 X 4 Boiler Classe 5 1Gr H.H.	
19	36404052	O-Ring 9,16 X 2,62 F 3037	
20	10700300	Starter Kit Hydro Hub 220-24V	
	10700300	Starter Kit Hydro Hub 220-24V	
	10701245	Hydro Hub 120V 60Hz	
	10701246	Hydro Hub 230V	
21	69140006	Filter Hydraulic Module	
22	69140047	Kit Check Valve Complete	
23	69140048	Gummy+Bush	
24	69140018	Spring Check Valve	
25	69140016	Check Valve Cap	
27	69140009	Pressure Relief Valve Hydraulic Module	
28	69140019	Pressure Relief Valve Cap	
29	69140010	Spring Pressure Relief Valve Hydraulic Module	
30	69140011	Plunger Pressure Relief Valve Hydraulic Module	

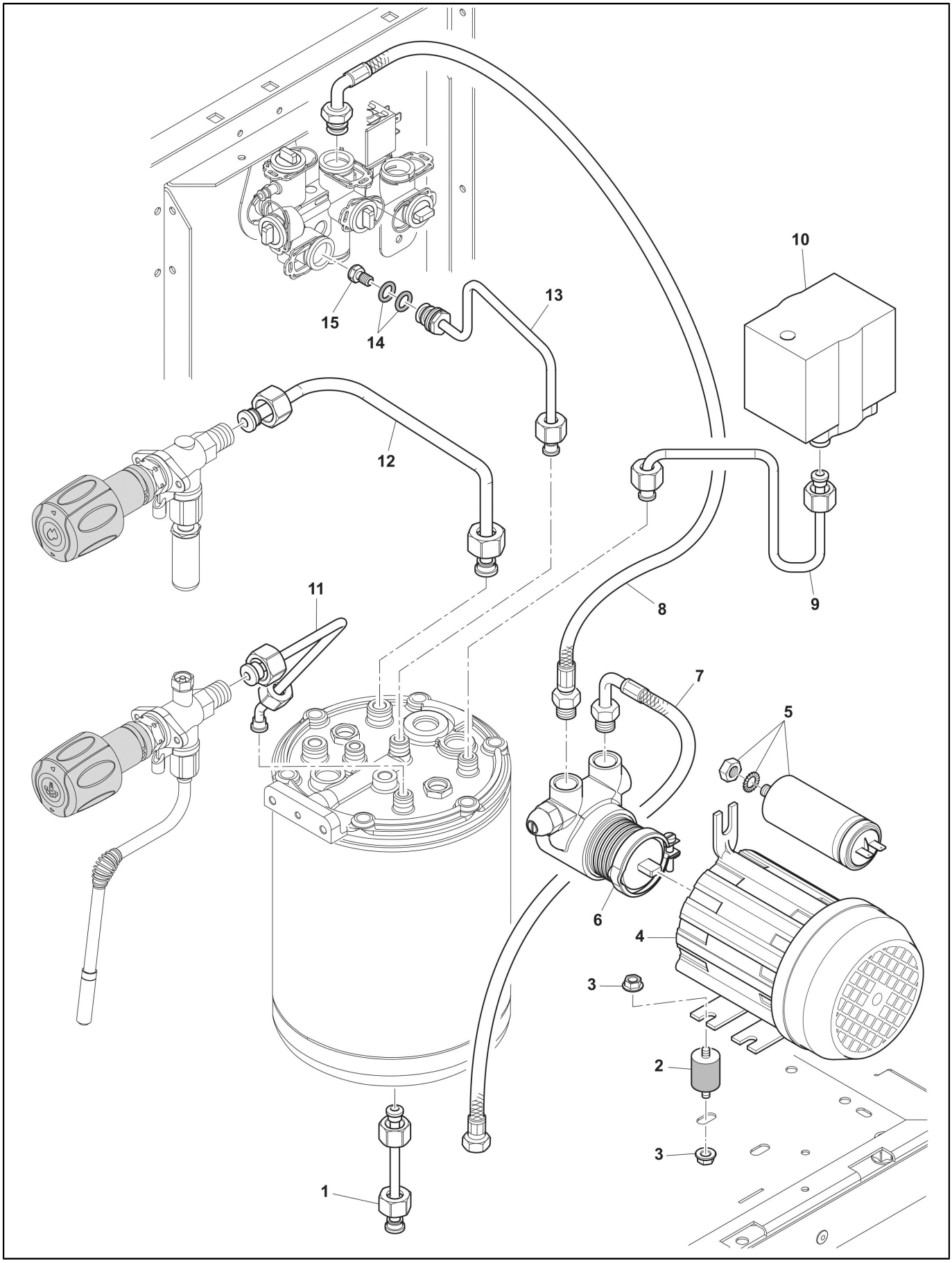
10
13
15
14
12
11
8
9
7
5
6
4
3
2
3
1

POS.	CODE	DESCRIPTION	NOTES
2	36322003	Anti-Vibrating Device 20 X 20 - M6 X 10 Sh45	
3	80134961	Nut M6	
4	34011009	Motor 110 V Ce / Ul	
	34011102	Vm Motor 230V	
5	34020020	Capacitor 8 Mf Rpm	
6	10705960	Kit Pumping Element	
7	69000734	Flex Pipe Mm1800 With Elbow+Check Valve	
8	69000836	Pipe Flex 3/8M-Sn 350 With Bend	
9	10042149	Pipe Pressure Switch Classe 5 1Gr	
10	34200109	Mech. Pressure Switch P/303	
11	10042145	Pipe 6 X 4 Steam Pipe-Boiler 1Gr	
12	10043078	Pipe Hot Water Outlet Boiler Classe 5 1Gr	
13	10042148	Pipe H.H.-Heat Exch. Classe 5 1Gr.Vert.	
14	36404052	O-Ring 9,16 X 2,62 F 3037	
15	10701530	Flow Limiter Hydrohub 1Gr	

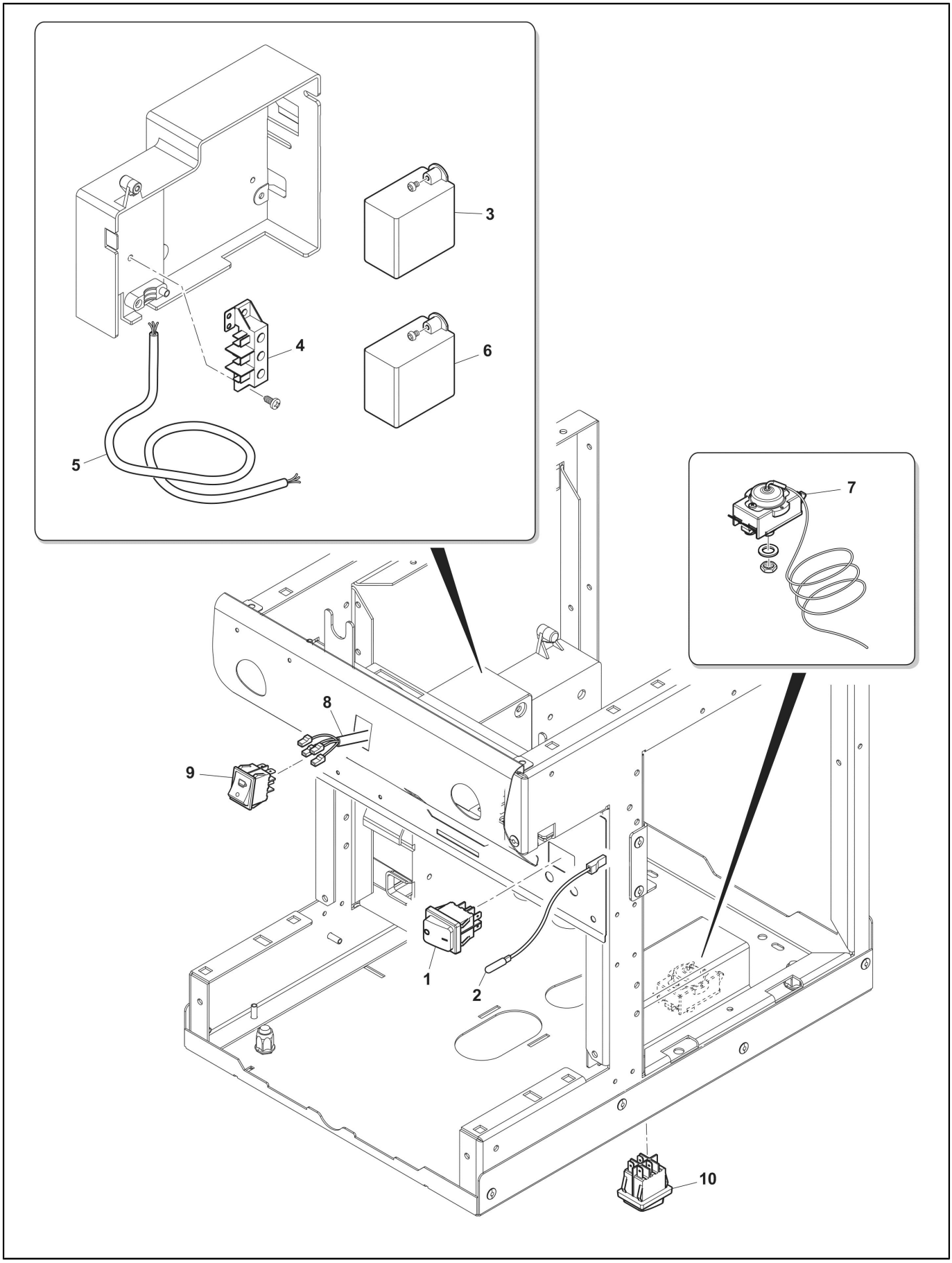
3
4
6
5
7
8
9
1
2
10

POS.	CODE	DESCRIPTION	NOTES
1	34030146	Switch With Membrane	
2	34030147	Lamp 220V Orange C5 1Gr	
	34030148	Green Light 220V Classe 5 1Gr	
	34030149	Lamp 110V Orange C5 1Gr	
	34030150	Green Light 110V Classe 5 1Gr	
3	34070028	Transductor Rals 110V	
	34070029	Transductor Rals 220/240V	
4	34150023	Clamp 3 Pol.	
5	34300121	CAVO SJO/SJTO 3X12AWG UL-CSA L=2000+OCCHIELLO DI	
6	34200276	RELE' TYCO KUHP-115A51-120	Only for 1 gr. version ST 110v Solo per versione 1 gr. ST 110V
7	34200354	High Limit Thermostat 165/15 110V Ul	
	34200355	High Limit Thermostat 165/15 220V	
8	10110967	Wiring 1Grv.C5 St 110V	
	10110969	Wiring 1Grv. C5 S	
	10110970	Wiring 1Grv. C5 St 230V	
9	34030134	Coffee Switch Mod M	
10	34030146	Switch With Membrane	

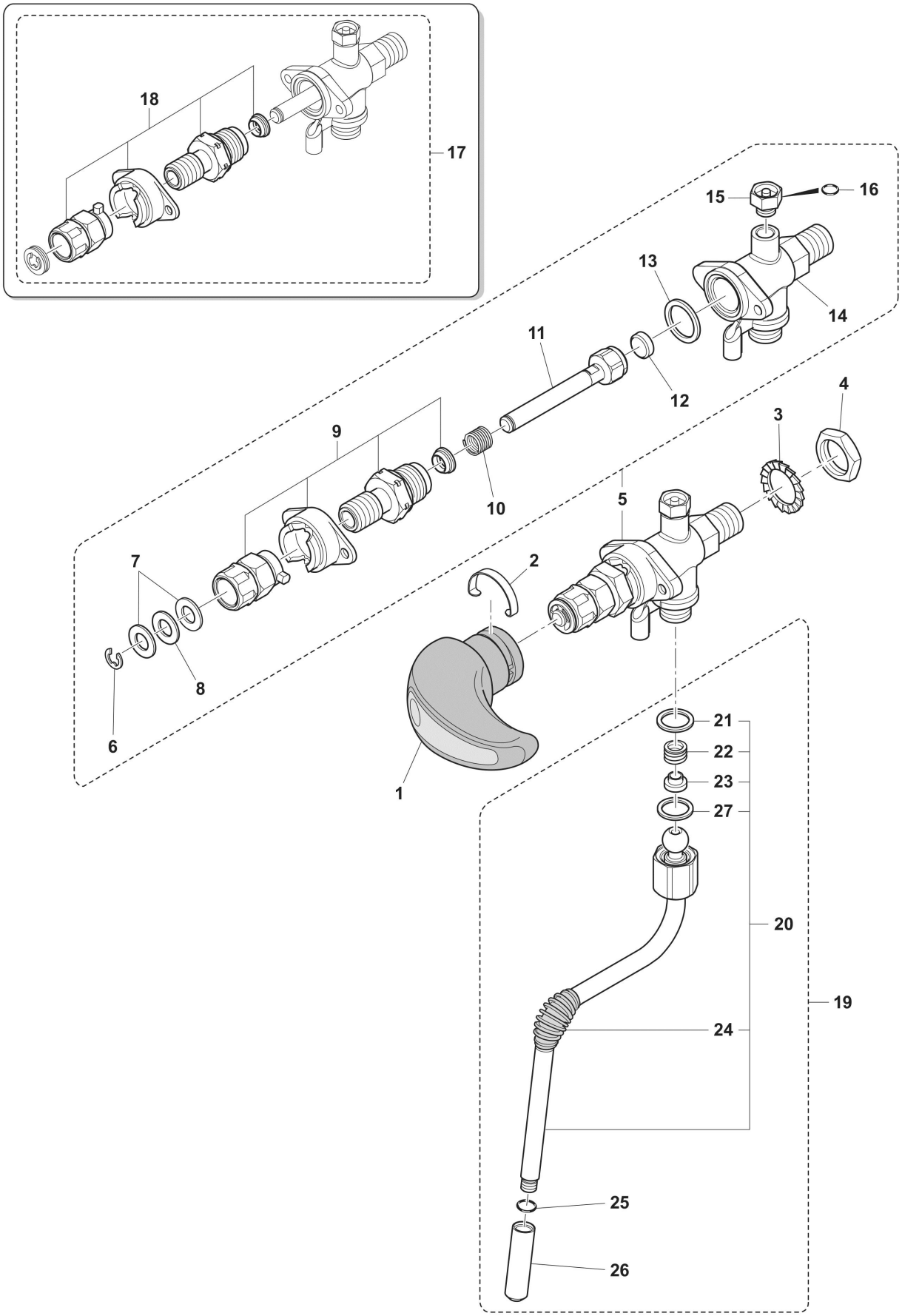
18
17
15
16
13
14
11
12
4
3
9
10
5
7
2
8
6
1
21
22
23
27
20
19
24
25
26

POS.	CODE	DESCRIPTION	NOTES
1	10060181	Handle Clever	
2	32210001	Steam Handle Spring	
3	37431600	Outer Toothed Washer D16	
4	26220005	Flat Nut 3/8	
5	10060148	Fast Steam Tap Right	
6	37510700	Snap Ring D. 7	
7	32239044	New Steam Cock Washer	
8	36230001	Teflon Washer	
9	10701239	Kit Clever/15 Cams Peek Right	
10	39110035	Water-Steam Cock Spring	
11	10060002	Rod+Nut And Steam Cock Gasket	
12	36301105	Gasket For Nut Steam Tap Epdm	
13	27400001	Gasket Copper Compass Re Group	
14	10701621	Steam Tap Body With Av. Valve/19	
15	10705180	Kit Av Valve Steam Tap	
16	36404058	O-Ring 3.68 X 1.78 Epdm 70Sh Teflon	
17	10060147	Fast Steam Tap Left	
18	10701240	Kit Clever/15 Cams Peek Left	
20	10049112	Steam Pipe Inox Lg 25	
21	36220009	Gasket Nut Note Teflon	
22	39110038	Spring Connection Steam Tap	
23	36930016	Gasket Teflon Connection Steam Wand	
24	36990004	Rubber For Steam Pipes	
25	36301050	O-Ring 6.4X1.9	
26	23212035	Steam Sprayer Lg44 D1.5	
27	36930017	Teflon Gasket For Steam Wand Nut	

Code	No. table	Pos.
	1000_5	5
	1000_5	6
	1000_5	7
	2003_2	10
10025015	2003_2	3
10029306	2003_2	9
10030033	2003_2	5
10041052	2003_2	7
10042129	2003_2	16
10042144	2003_2	18
10042145	2001_2	11
10042148	2001_2	13
10042149	2001_2	9
10043078	2001_2	12
10049014	2008	22
10049112	2007	20
10049112	4000	20
10051182	2004_1	1
10060002	2007	13
10060002	2008	13
10060002	4000	11
10060023	2008	16
10060051	2003_2	12
10060147	4000	17
10060148	4000	5
10060149	2007	5
10060153	2008	5
10060181	4000	1
10060188	2008	1
10060189	2007	1
10060525	2003_2	14
10071100	2004_1	2
10071118R	2004_1	3
10071137R	2004_1	2
10090002	2004_1	17
10110967	3001_2	8
10110969	3001_2	8
10110970	3001_2	8
10700300	2003_2	20
10700300	2003_2	20
10701002	1000_5	18
10701004	1000_5	18
10701187	1000_5	2
10701188	1000_5	1
10701239	4000	9
10701240	4000	18
10701245	2003_2	20
10701246	2003_2	20
10701259	1000_5	2
10701260	1000_5	1
10701406	2008	17
10701409	2008	17
10701530	2001_2	15
10701621	2007	16
10701621	4000	14
10705091	2004_1	5
10705180	2007	17
10705180	4000	15
10705535	2004_1	4
10705799	2008	22
10705960	2001_2	6
10706034	2007	19
20112211	2004_1	6
20122653	2004_1	19
20200042	2004_1	18
20200182	2004_1	15
21100801	2004_1	8

Code	No. table	Pos.
21102601	2004_1	7
23000121	2007	26
23000121	2007	26
23000302	2007	10
23000302	2008	10
23000373	2008	22
23212035	4000	26
23220029	2007	9
23220029	2008	9
25105007	2004_1	11
25135020	2008	23
25139001	2004_1	14
26220005	2007	4
26220005	2008	4
26220005	4000	4
27350003	2003_2	13
27400001	2007	15
27400001	2008	15
27400001	4000	13
27400002	2004_1	20
32210001	2007	2
32210001	2008	2
32210001	4000	2
32239044	2007	7
32239044	2008	7
32239044	4000	7
32332040	1000_5	9
32332041	1000_5	11
32332042	1000_5	14
32332043	1000_5	3
32332044	1000_5	21
32332047	1000_5	17
32332048	1000_5	4
33111013	2003_2	4
33111015	2003_2	4
33122017	2003_2	4
34011009	2001_2	4
34011102	2001_2	4
34020020	2001_2	5
34030134	3001_2	9
34030146	3001_2	1
34030146	3001_2	10
34030147	3001_2	2
34030148	3001_2	2
34030149	3001_2	2
34030150	3001_2	2
34040149	2004_1	23
34040150	2004_1	23
34070028	3001_2	3
34070029	3001_2	3
34150023	3001_2	4
34200088	2003_2	15
34200109	2001_2	10
34200276	3001_2	6
34200354	2003_2	17
34200354	3001_2	7
34200355	2003_2	17
34200355	3001_2	7
34300121	3001_2	5
35002512	2003_2	6
36220009	2007	21
36220009	2008	18
36220009	4000	21
36220018	2003_2	8
36230001	2007	8
36230001	2008	8
36230001	4000	8

Code	No. table	Pos.
36301046	2004_1	16
36301050	2007	25
36301050	4000	25
36301105	2007	14
36301105	2008	14
36301105	4000	12
36322003	2001_2	2
36402001	2004_1	18
36404052	2001_2	14
36404052	2003_2	19
36404058	2007	18
36404058	4000	16
36930016	2007	23
36930016	2008	20
36930016	4000	23
36930017	2007	27
36930017	2008	21
36930017	4000	27
36990004	2007	24
36990004	4000	24
36990037	1000_5	18
36990078	2007	11
36990078	2008	11
37030518	2004_1	12
37040617	2004_1	21
37040821	2003_2	11
37040835	2004_1	21
37060413	2004_1	24
37430600	2004_1	22
37431600	2007	3
37431600	2008	3
37431600	4000	3
37510700	2007	6
37510700	2008	6
37510700	4000	6
38120300	1000_5	10
38120326	1000_5	18
38120328	1000_5	13
38120329	1000_5	13
38120335	1000_5	19
38120591	1000_5	16
38123011	1000_5	20
38123568	1000_5	15
38123852	1000_5	15
39110035	2007	12
39110035	2008	12
39110035	4000	10
39110038	2007	22
39110038	2008	19
39110038	4000	22
40100106	2004_1	9
40100107	2004_1	10
40200005	2004_1	13
42200121	1000_5	8
42200122	1000_5	4
42200140	1000_5	12
69000428	2003_2	1
69000734	2001_2	7
69000836	2001_2	8
69140006	2003_2	21
69140009	2003_2	27
69140010	2003_2	29
69140011	2003_2	30
69140014	2003_2	2
69140015	2003_2	2
69140016	2003_2	25
69140018	2003_2	24

Alphanumeric index

Code	No. table	Pos.
69140019	2003_2	28
69140047	2003_2	22
69140048	2003_2	23
80134961	2001_2	3

Headquarters, Production Plant and R&D Centers

Rancilio Group s.p.a.
Viale della Repubblica 40
20010 Villastanza di Parabiago
Milano - Italy
Tel +39 0331 408200
Fax +39 0331 551437
www.ranciliogroup.com
info@ranciliogroup.com

Egro Suisse AG
Bahnhofstrasse 66
5605 Dottikon, Switzerland
Tel. +41 (0)56 616 95 95
Fax +41 (0)56 616 95 97
www.egrocoffee.com
info@egrocoffee.com

Worldwide Branch Locations

SPAIN

RanciliaGroup Espana, s.a.
Gran Vía de Carlos III, 84 3ª
Edificio Trade
08028 Barcelona - Spain
Tel. +34 902 884 275
Tel. +34 934 923 414
Fax +34 934 965 701
www.ranciliogroup.com
info-es@ranciliogroup.com

PORTUGAL

Rancilio Group Portugal Lda
Estrada da Falagueira nº 68 E
2700-365 Amadora-Lisboa - Portugal
Tel. +351 21 019 10 91
Fax +351 21 019 10 91

Rua Nova do Seixo 1282
4465-706 Leca do Balio-Porto - Portugal
Tel. +351 22 010 14 19
Fax +351 22 010 14 19
www.ranciliogroup.com
info-pt@ranciliogroup.com

GERMANY

Rancilio Group Deutschland GmbH
Talstrasse 27
97990 Weikersheim - Germany
Ph. +49 7934 99 29 30
Fax +49 7934 99 29 330
www.ranciliogroup.de
info-de@ranciliogroup.com

SWITZERLAND

Egro Suisse AG
Bahnhofstrasse 66
5605 Dottikon - Switzerland
Tel. +41 (0)56 616 95 95
Fax +41 (0)56 616 95 97
www.egrosuisse.ch
info@egrosuisse.ch

USA/CANADA

Rancilio Group North America Inc.
1340 Internationale Parkway / Suite 200
Woodridge, IL 60517 - U.S.A.
Ph: +1 630 914 7900
Fax: +1 630 914 7901
Toll Free: +1 877 726 2454
www.ranciliogroup.com
info@ranciliogroupna.com