EGRO

BUILT FOR EXCELLENCE

EONETM v.372

SPARE PARTS CATALOGUE

en-US

EGRO ONE TOP MILK

EGRO ONE

Index

1000 - Housing....4
1001 - Front Panel....8
2000 - Coffee line....10
2000_02 - Coffee line from S/N 12007595 (FIREM boiler)....14
2001_02 - Water/Steam Lines from S/N 1207595....18
2002 - Coffee Brewing Group (L61)....20
2002_02 - Coffee Brewing Group (BC18) from S/N 12009467....22
2004 - Water spout....26
2005 - Bean Hopper-Grinders....28
2006 - Steam Boiler - steam valve block XP/QM....30
2007 - Water Inlet System....32
2007_02 - Water Inlet System from S/N 12007595....36
2008 - Steam Boiler-Steam Valve Block TOP MILK....40
2011 - Water/Steam Lines TM/QM....44
2015 - Coffee line from S/N....46
2016 - Water Inlet System from S/N....48
3000 - Electric Part/Electronic....50
3001 - CPU Board Connections....52
6000 - Milk Pump Unit KS 7....54
6000_02 - Milk Pump Unit NMS....56
6002 - TM Milk Brewing System....58
6003_02 - MILK SYSTEM QM NMS....60
4000 - Isteam ONE....64
4001 - Clever Steam Tap....66
Alphanumeric index....68

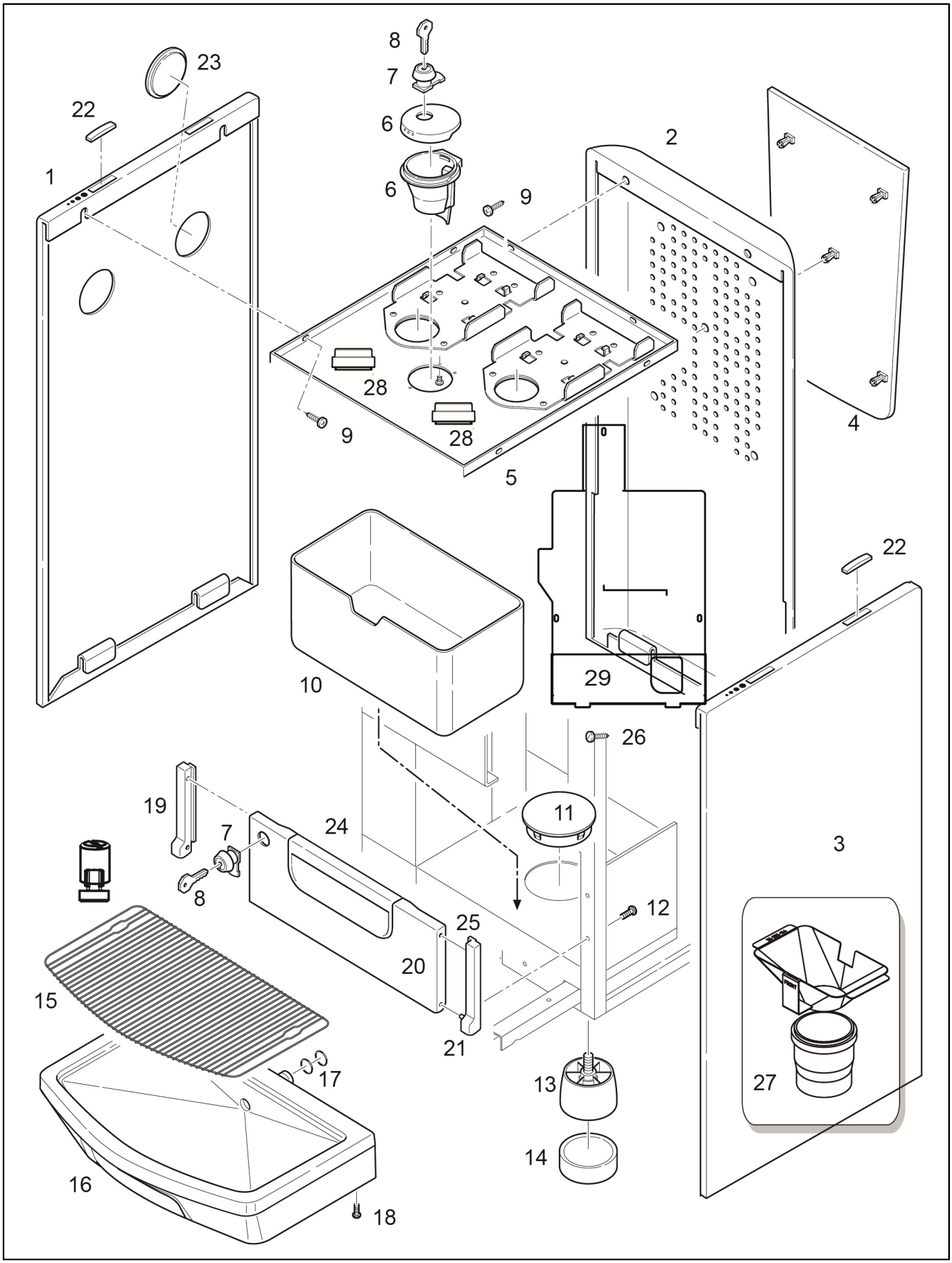
8
7
6
6
9
23
22
1
2
28
9
28
5
4
22
10
29
26
19
7
24
11
3
8
12
25
20
15
21
17
13
27
14
16
18

Pos.	Code	Description	Notes
1	10705966	Kit Side Panel Grey With Caps	
	10705968	Kit Side Panel Grey With Holes And Caps	
	320200000	side panel with hole black Next/one	
	320200001	side panel black Next/One	
2	32551057	Rear Panel	
	32551057A	REAR PANEL CUPHEATER-FRIDGE BLACK ONE	
3	10705966	Kit Side Panel Grey With Caps	
	10705979	Kit Side Panel Right With Caps Powd. Mod.	
	320200000	side panel with hole black Next/one	
	320200001	side panel black Next/One	
4	38120163	Egro One Shield	
	45010384	Egro Logo Small/21	
	45010385	Egro Logo Big/21	
5	10701799	Top Lid Assy. One 2 Grinder	
	10705717	Top Lid 1 Grinder	
	38221007	Cap Diam.11	
6	10705707	Cover For Powder Coffee Inlet Without Lock	
	10705708	Coffee Powder Inlet Self Assy	
7	10705528	Ronis Lock	
8	10705529	Lock Assay. Ronis M15X17,5 With Hook 25.5Mm	
	69000336	Lock 90 17 X 16	
	69000338	Serial Key Cod 1000	
9	00046844	Screw M4 X 8 Mm	
10	38120121	Coffee Waste Drawer	
11	38221017	Cap D. 54 Mm	
	38221018	Cap D. 85.7 Mm	
12	37030309	Screw M 3 X 6 Tfl Ph	
13	38123568	Machine Foot	
14	38123852	Riser For Machine Foot	
15	00054649	Spacer Pin To Drip Grid M 8 X 15 Mm	
	00055557	Cup Guide Set	
	10701413	Kit Cup Holder One	
	10781311	Drain Tray Grid	
16	00046069	Crossed Raised Cheese Head Screw 4 X 14 Mm	
	10705801	Drain Tray	
	38120072	Waste Drain Tray Insert One	
	38120318	DRAIN TRAY LOGO BYO	
17	00002240	O-Ring 14 X 1,78 Epdm 70Sh	
	36405002	O-Ring Epdm 70Sh 3050 Gray	
18	00046069	Crossed Raised Cheese Head Screw 4 X 14 Mm	
	39920015	Clamp	
19	00100997.001	Bar Left	
	38903002		
	69200072		
20	00100986.001	Drawer Door With Lock	
	00100987.001	Drawer Door Assy	
	32331419	Waste Bin Door One	
	37040412	Screw M4 X 10 Tsp Ph	
21	00100996.001	Bar Right	
	23000136	Coffee Waste Drawer Hinge	
	37510320	Snap Ring D. 3.2	
	69200072		
22	38120126	Cap Side Panel One	
23	690300026		
24	37320603	Group Fixing Cage Nut M4	

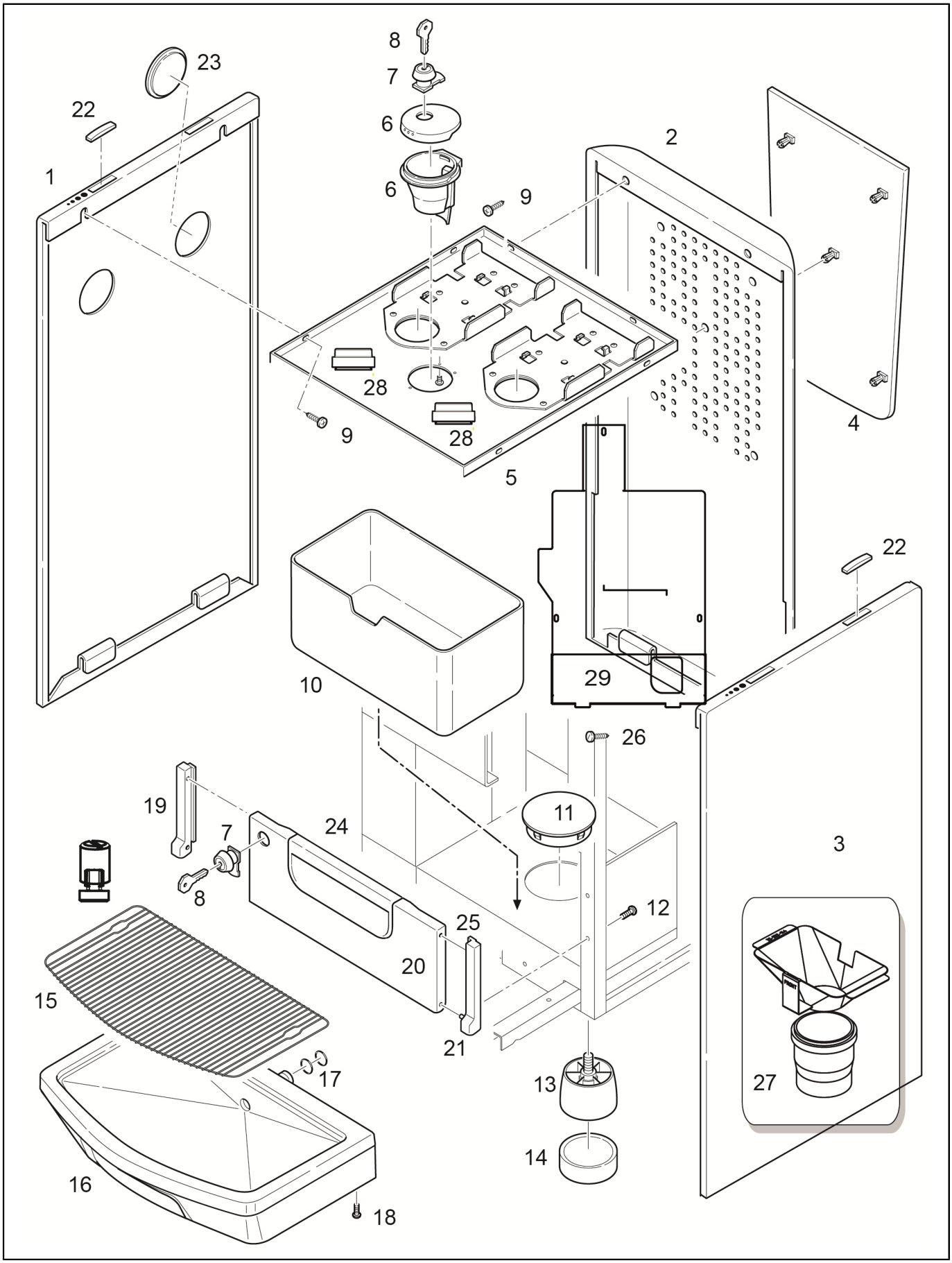
8
7
6
6
23
22
1
2
9
28
9
28
5
4
22
10
29
26
19
7
24
11
3
8
12
25
20
15
21
17
13
27
14
16
18

Pos.	Code	Description	Notes
	37370301	Nut M3 Inox	
	38120097	Drawer Handle	
25	10700997	Kit Grounds Drawer Block	
26	32331435	C-Bracket For Connecting With Add-Ons	
	37040410	Screw M 4 X 10	
	37320603	Group Fixing Cage Nut M4	
27	10701527	Kit Direct Grounds Funnel 2018	
28	36990025	Seal (Collar) / Grinder	
29	32331698	Rear closing waste Drawer One	
	37040410	Screw M 4 X 10	

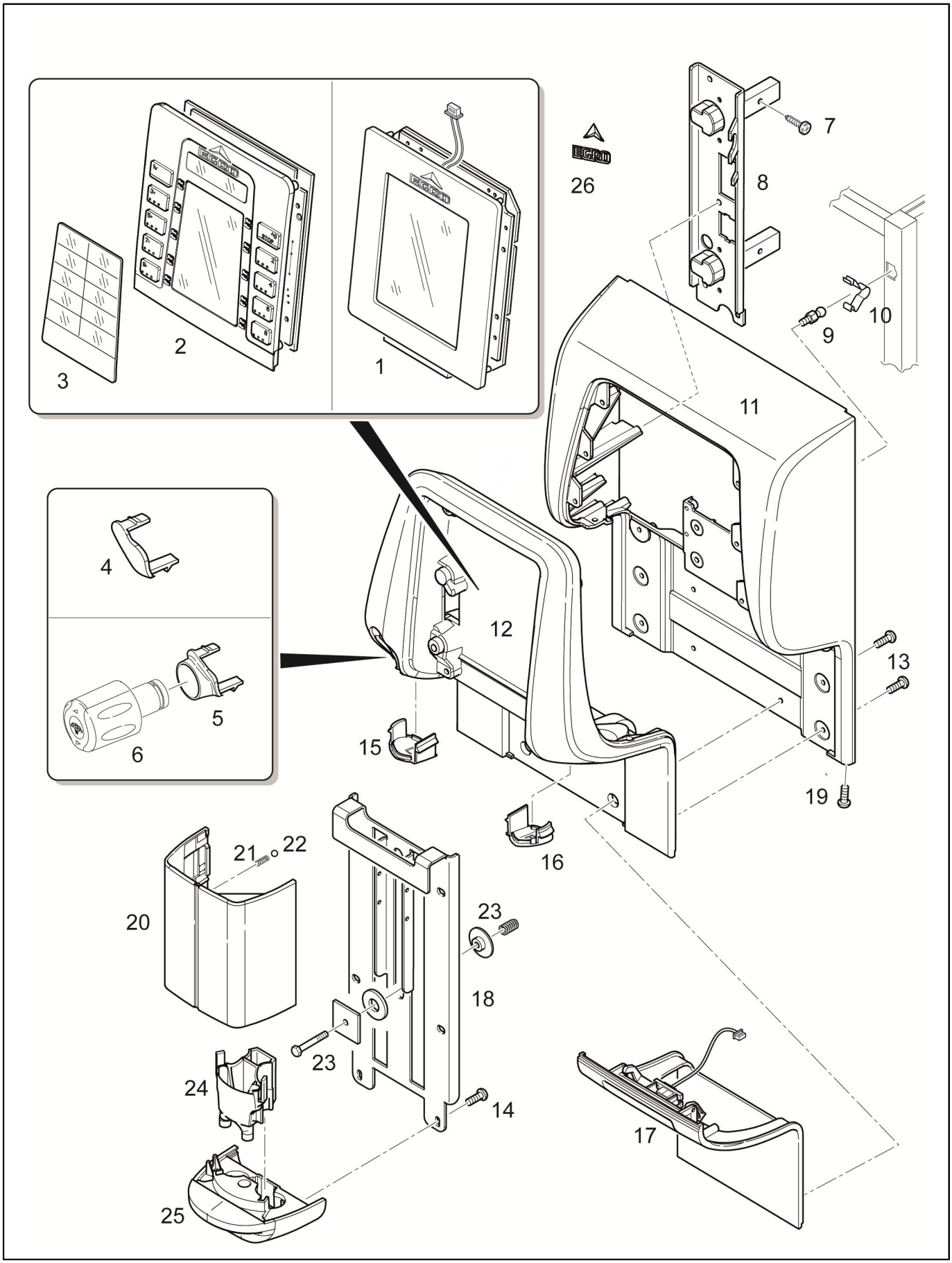
1
2
3
4
5
6
7
8
9
10
11
12
13
14
15
16
17
18
19
20
21
22
23
23
24
25
26

Pos.	Code	Description	Notes
1	10700989	Kit Touch Screen Egro One Capacitive	
2	10701659	Kit Keypad Button One	
	10705964	Keypad One	
	45010208	Sticker Egro Logo Small	
3	38120086	Buttons Slider Label	
4	38120088	Cover Steam Handel	
5	38120087	Cover	
6	10060189	Steam Tap/16	
7	37040411	Screw M4X 10Mm Tsp Cross Inox	
8	10705710	Hing Holder Plate	
9	37901002	Lock Bolt	
10	39920006	Clamp	
11	21000010A	Front Panel One Grey	
	21000010B	Front Panel One Black	
12	38120077	Control Panel One	
13	37040410	Screw M 4 X 10	
14	37040446	Screw M4 X 45 Hh Inox	
	37420403	Elastic Washer 4 1X10X0,9 Rip Lock	
15	38120089	Cover Steam Spout	
16	38120090	Cover Hot Water Spout	
17	10705592	Usb Wired Assy One	
	34070075	Wiring Set J6 With Usb Connector (Touch Pad)	
	36901952	Rubber Seal Touchscreen One Touch	
18	00100994.001	Coffee Outlet	
	10701101	RETROFIT KIT ONE XP NMS	
	10701144	RETROFIT KIT ONE QM NMS	
	32331405	Slider Beak Coffee One	
	32331407	Coffee Outlet Baseplate	
19	37040420	Hex Socket Head Screw M4 X 20 Mm	
20	10905117	Cover	
	10905122	Cover Quick Milk	
21	39110062	At Ball Spring	
22	37900115	Ball 1/4 100	
23	00054944	SCREW WITH SPRING ASSAY.	
24	00047077	Flow Cup Self	
	00047078	Flow Cup Standardt	
	38120180	Powder Module Outlet	
25	10701274	Outlet One Old Milk System Assy.	
	10701275	Kit Outlet One Oms Central Water	
	10701276	Outlet Bracket One Oms	
26	45010208	Sticker Egro Logo Small	

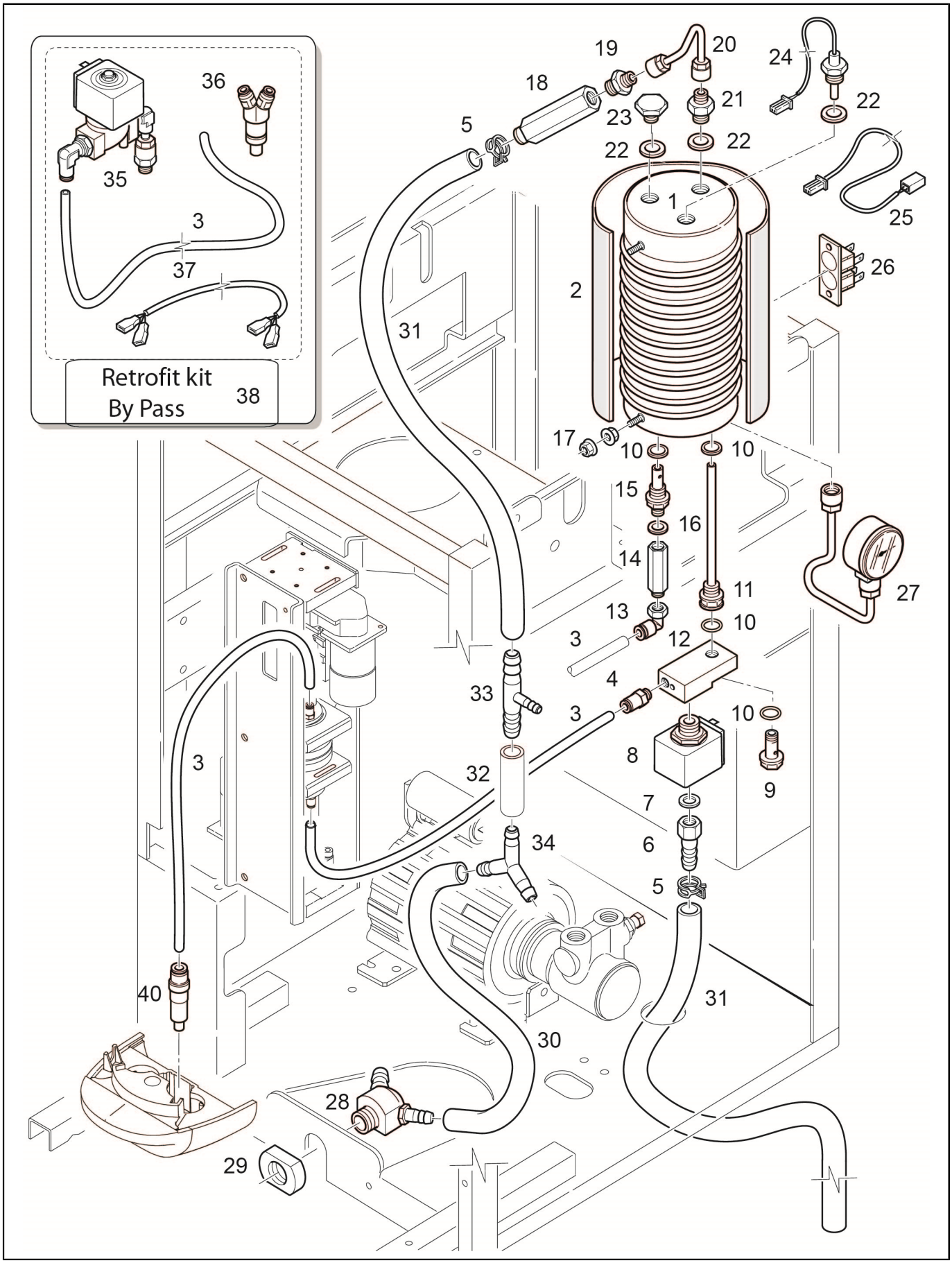
Retrofit kit
By Pass
38
35
36
3
37
5
18
19
20
23
21
22
22
24
22
25
1
2
26
31
17
10
10
15
16
14
11
27
13
10
3
12
4
33
3
10
8
9
3
32
7
34
6
5
40
31
30
28
29

Pos.	Code	Description	Notes
1	00100804.001	Boiler 3000W Coffee Assy.	
2	00054429	Insulation With Adhesive Tape	
	36901955	Sticky Tape 3M 50Mmx55Mt	
3	38228072	Teflon Hose Fep D. 4,0 X 2,5	
4	00055941	O-Ring Fkm V	USA machines
	69200133	Straight Connector D.4 X M5	
5	00055794	Wire Hose Clamp 159 Mm	
6	23000322	Rubber Holder Valve Coffee Zero-One	
7	27350014	Copper Gasket 12.5X9.8X1.5	
8	00100147.001	Operator Kit 3/2 Way Water T30 (Acl)	
	00100149.001	Plunger 3/2 Water T30 (Acl)	
9	00054923	Hollow Screw With O-Ring	
10	00002240	O-Ring 14 X 1,78 Epdm 70Sh	
11	00054107	Connection To Boiler Withdrawal	
	00054920	Connection To Boiler Withdrawal With O-Ring	
12	00053785	Valve 3/2 Brewing	
13	69200139	Elbow Connector 4 X G1/8 Ppsu	
14	00054067	Check Valve D. G 1/8	
15	00057567	Adapter Nippled. G 1/4 X G 1/8	
16	27350014	Copper Gasket 12.5X9.8X1.5	
17	00001521	Keps Nut M5	
18	10060605	Pressure Relief Valve 12 X G1/4	
20	10705179	Expansion Valve Pipe Assy.	Rohr zu Expansionsventil / Pipe for expansion valve
	10705185	Pressure Relief Valve With Pipe	
21	00100059.001	Double Nipple G 1/4 X G 1/4	
22	00044464	Gasket 16,5 X 13,2 X 1,5 Copper	
23	00100105.001	Joint Cap G 1/4M 1/4F	
24	10700268	Retrofit Kit Temp. Sensor One-S50	
	10701642	Temperature Sensor With O-Ring	
25	10110729	Extension Cable Temperature Sensor	
26	00058836	Temperature Limiter 250 C Twin	
27	10700101	Manometer 25 Bar With Pipe	
	10705175	Manometer-Boiler Coffee Pipe	
	35002511	Manometer Coffee Boiler D.40 0-25 Bar Cl 1,6	
28	10705809	Drain Tray Connection	
29	23000135	Nut Drain Connection	
30	00004475	Silicon Hose D. 12 X 8 Mm	
31	00004473	Silicon Hose D. 14 X 9 Mm	
	00100862.003	Drain Pipe Kit	
32	00004473	Silicon Hose D. 14 X 9 Mm	
33	00045714	Reducing T Connector D. 12 - 6 - 12 Mm	
34	00046806	Y Unit D. 12 Mm	
35	00054430	Valve 2/2 24V Hot Water	
	00100559.001	Operator Kit 2/2 Way Water T30 (Acl)	
	00100560.001	Plunger 2/2 Water T30 (Acl)	
36	00050095	Pressure Valve By Pass	
37	10110704	Wiring Set J31 By Pass One	
38	00101001.001	Retrofit Kit By Pass	
40	00002195	O-Ring 5 X 1 Epdm 70Sh	
	00002207	O-Ring 8 X 1 Epdm	
	00047934	Pressure Valve	
	00050095	Pressure Valve By Pass	
	00050096	Coffee Spout Without Checkvalve	

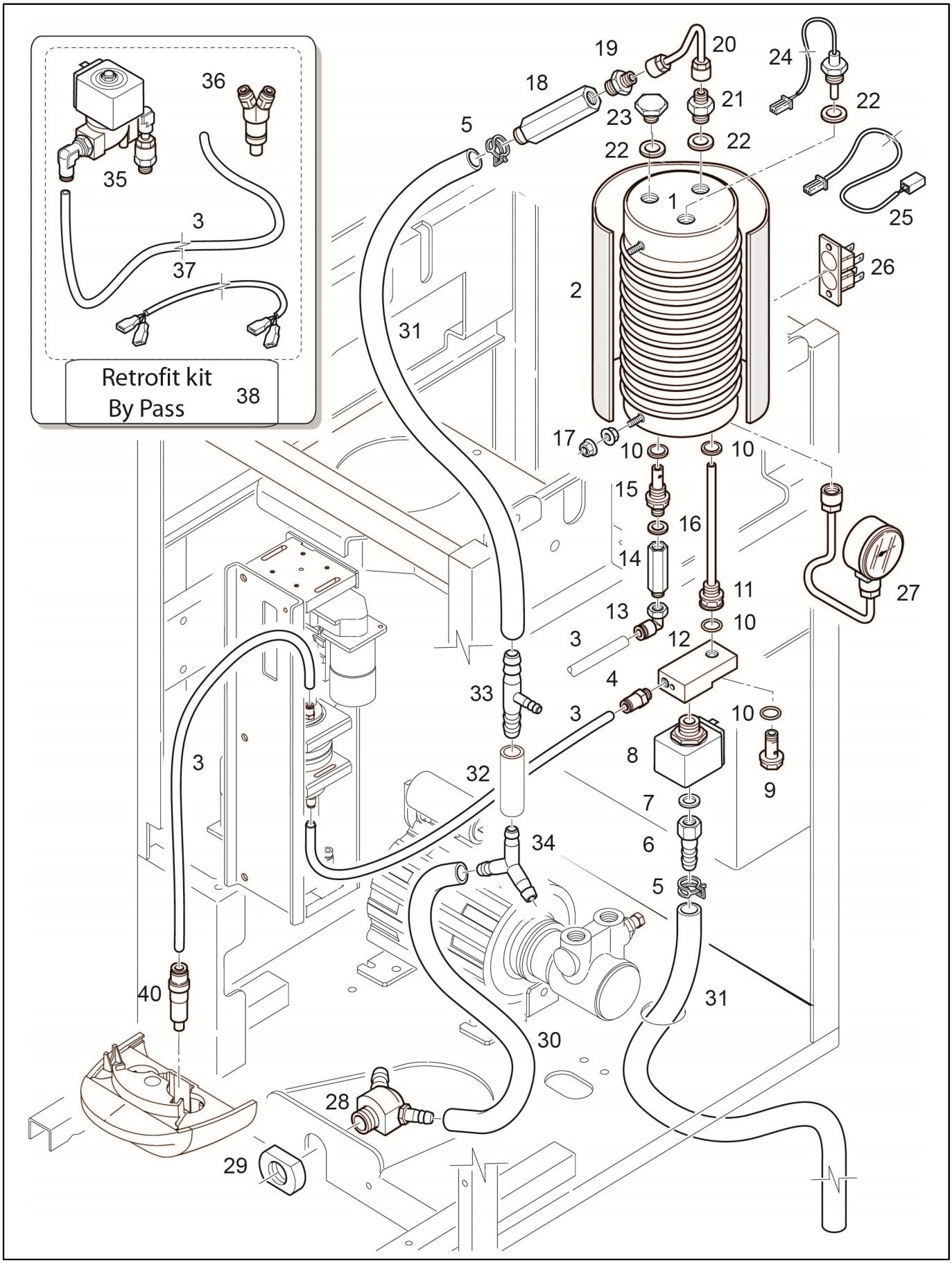
Retrofit kit
By Pass
38
35
36
3
37
5
18
19
20
23
21
22
24
25
26
1
2
31
17
10
15
16
14
11
13
12
27
4
33
32
34
8
7
6
9
40
30
28
29

Pos.	Code	Description	Notes
	00054647	Hot Water Spout By Self Service	

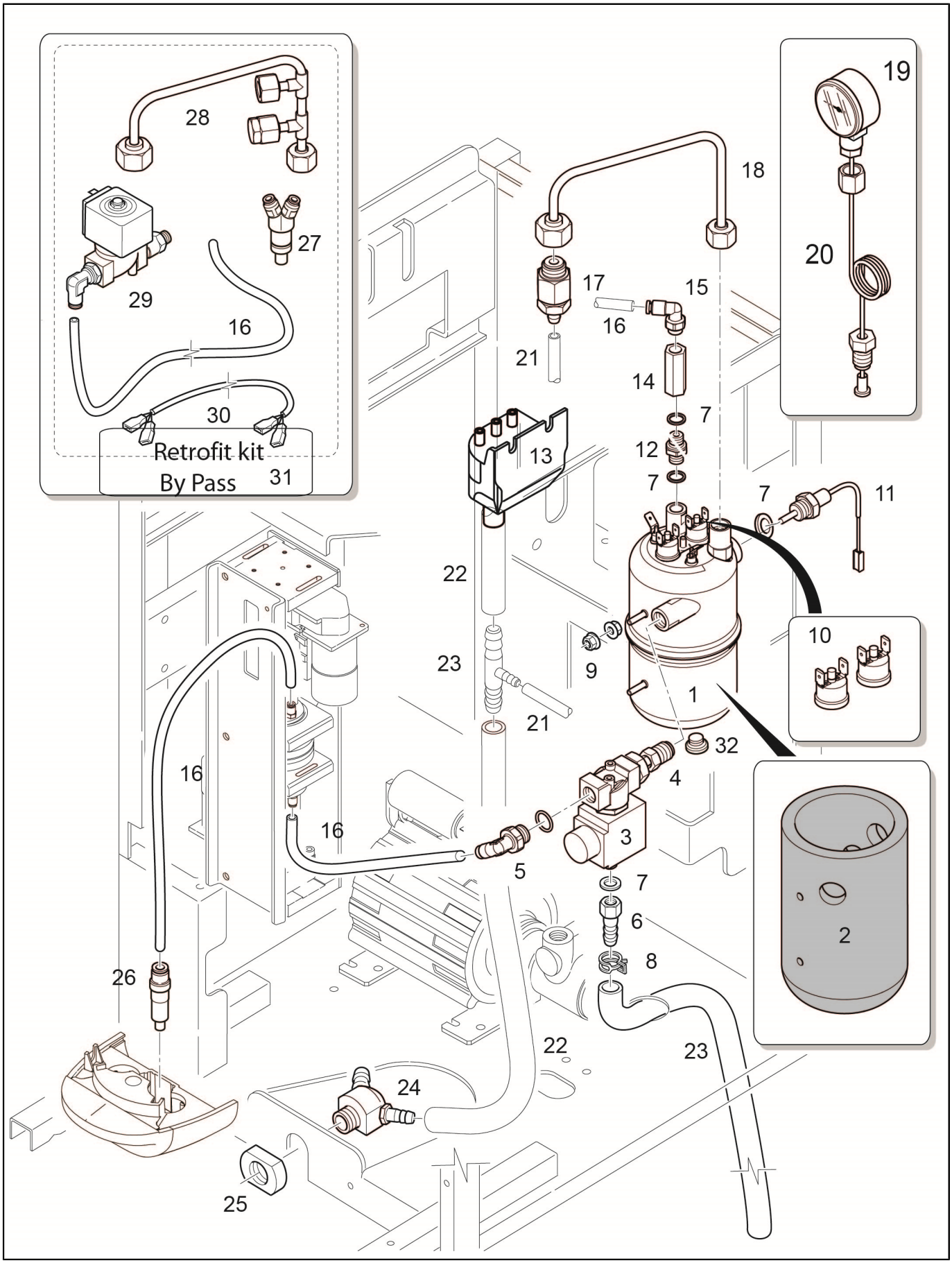
28
27
29
16
30
Retrofit kit
By Pass
31
19
20
18
17
15
16
21
14
7
12
13
7
7
11
22
10
23
9
1
21
32
16
4
16
3
5
7
6
2
8
26
22
23
24
25

Pos.	Code	Description	Notes
1	10020038	Boiler 230V 2500W Coffee Incoloy 800	
	10701094	Retrofit Kit Coffee Boiler 2,5Kw 0,5L Dhe	
2	69000415	Boiler Insulation	
3	00100147.001	Operator Kit 3/2 Way Water T30 (Acl)	to be used on machine before S/N 12011960 PIN 119415 da utilizzare su macchine precedenti la N/F 12011960 PIN 119415
	00100149.001	Plunger 3/2 Water T30 (Acl)	to be used on machine before S/N 12011960 PIN 119415 da utilizzare su macchine precedenti la N/F 12011960 PIN 119415
	10060607	Electrovalve Coffee Boiler	
	27350014	Copper Gasket 12.5X9.8X1.5	
	34040184	Valve 3/2 24V T30 (Sirai)	
4	10042199	Pipe Valve-Boiler Coffee Zero	
5	69200142	Elbow Connector G1/4X4 Ppsu	
6	23000322	Rubber Holder Valve Coffee Zero-One	
7	27350014	Copper Gasket 12.5X9.8X1.5	
8	00055794	Wire Hose Clamp 159 Mm	
9	00001521	Keps Nut M5	
10	32331780	Thermostat Fixing Bracket	
	34200294	Clicson Thermostat 127 One	
11	10701642	Temperature Sensor With O-Ring	
12	00054064	Threaded Male Nipple (Usa)	
13	10700232	Valve Drain Tray	
	38120109	Drain Collector Lower Part	
	38120110	Drain Collector Upper Part	
14	69200173	Check Valve 4 X G1/8	
15	69200142	Elbow Connector G1/4X4 Ppsu	
16	38228072	Teflon Hose Fep D. 4,0 X 2,5	
17	10060006	Nut And Steam Cock Gasket	
	10060479	Expansion Valve 8 X G 3/8	
	27350001	Gasket 3/8 X 1 Copper	
18	10042099	PIPE EXPANSION VALVE COFFEE BOILER	
19	35002509	Manometer Pumpe 0-16 D. 44	
20	69000244	Pipe Pump Manometer	
21	00004474	Silicon Hose D. 8 X 5 Mm	
22	00052557	Silicon Hose D. 18 X 12 Mm	
23	00045714	Reducing T Connector D. 12 - 6 - 12 Mm	
24	00004475	Silicon Hose D. 12 X 8 Mm	
25	23000135	Nut Drain Connection	
26	00002195	O-Ring 5 X 1 Epdm 70Sh	
	00047934	Pressure Valve	
27	00050095	Pressure Valve By Pass	
28	10046062	Pipe Expansion Valve+Boiler Coffee	
29	10060606	Electrovalve Powder-Bypass	
	34040177	Plunger 2/2 T30 (Sirai) Ml316	to be used only on machine with SIRAI Valve (34040162) da utilizzare solo su macchine con valvolva Sirai (34040162)
	34040180	Operator Kit 2/2 Ways T30 24V Sirai	to be used only on machine with SIRAI valve 34040162 da utilizzare solo su macchine con valvolva SIRAI 34040162
	34040183	Valve 2/2 24V T30 (Sirai)	
30	10110704	Wiring Set J31 By Pass One	

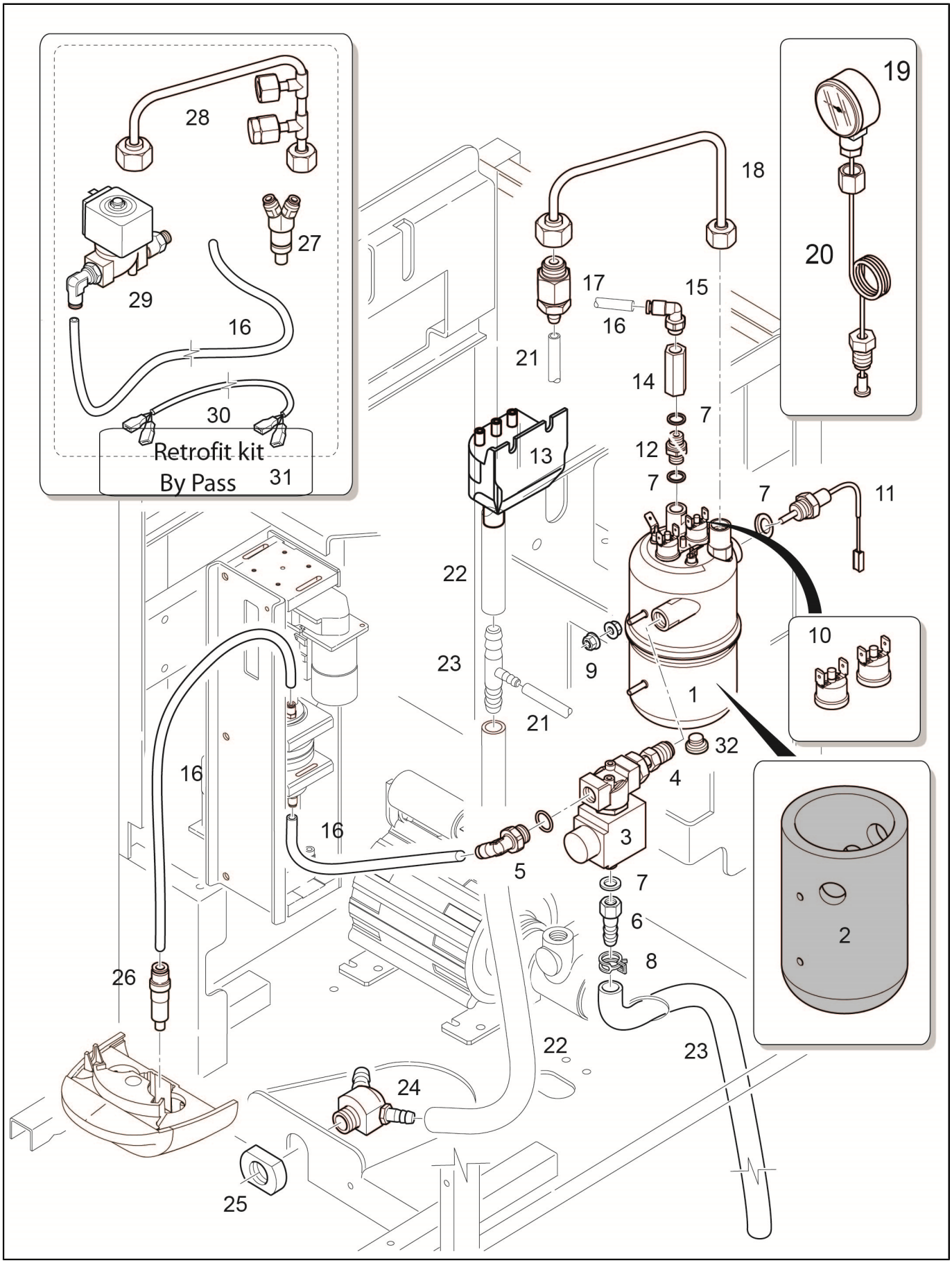
28
27
29
16
30
Retrofit kit
By Pass
31
19
20
18
17
15
16
21
14
7
12
13
7
7
11
22
10
23
9
1
21
32
16
4
16
3
5
7
6
2
8
26
22
23
24
25

Pos.	Code	Description	Notes
31	10701148	Retrofit Kit Bypass With 2,5Kw Boiler	only for FIREM or DHE Boiler
32	23000299	Cap G1/8 Boiler One/Zero	
	27350014	Copper Gasket 12.5X9.8X1.5	

Pos.	Code	Description	Notes
1	38228073	Teflon Hose Fep D. 6 X 4	
2	00004474	Silicon Hose D. 8 X 5 Mm	
3	00004473	Silicon Hose D. 14 X 9 Mm	
4	00004475	Silicon Hose D. 12 X 8 Mm	
5	00045714	Reducing T Connector D. 12 - 6 - 12 Mm	
6	00055795	Wire Hose Clamp 17,3 Mm	
7	10700232	Valve Drain Tray	
	38120109	Drain Collector Lower Part	
	38120110	Drain Collector Upper Part	
8	69200140	Elbow Connector6 X G1/8 Ppsu	
9	10700281	Drain Pipe Kit	
10	00045714	Reducing T Connector D. 12 - 6 - 12 Mm	
11	00100862.003	Drain Pipe Kit	

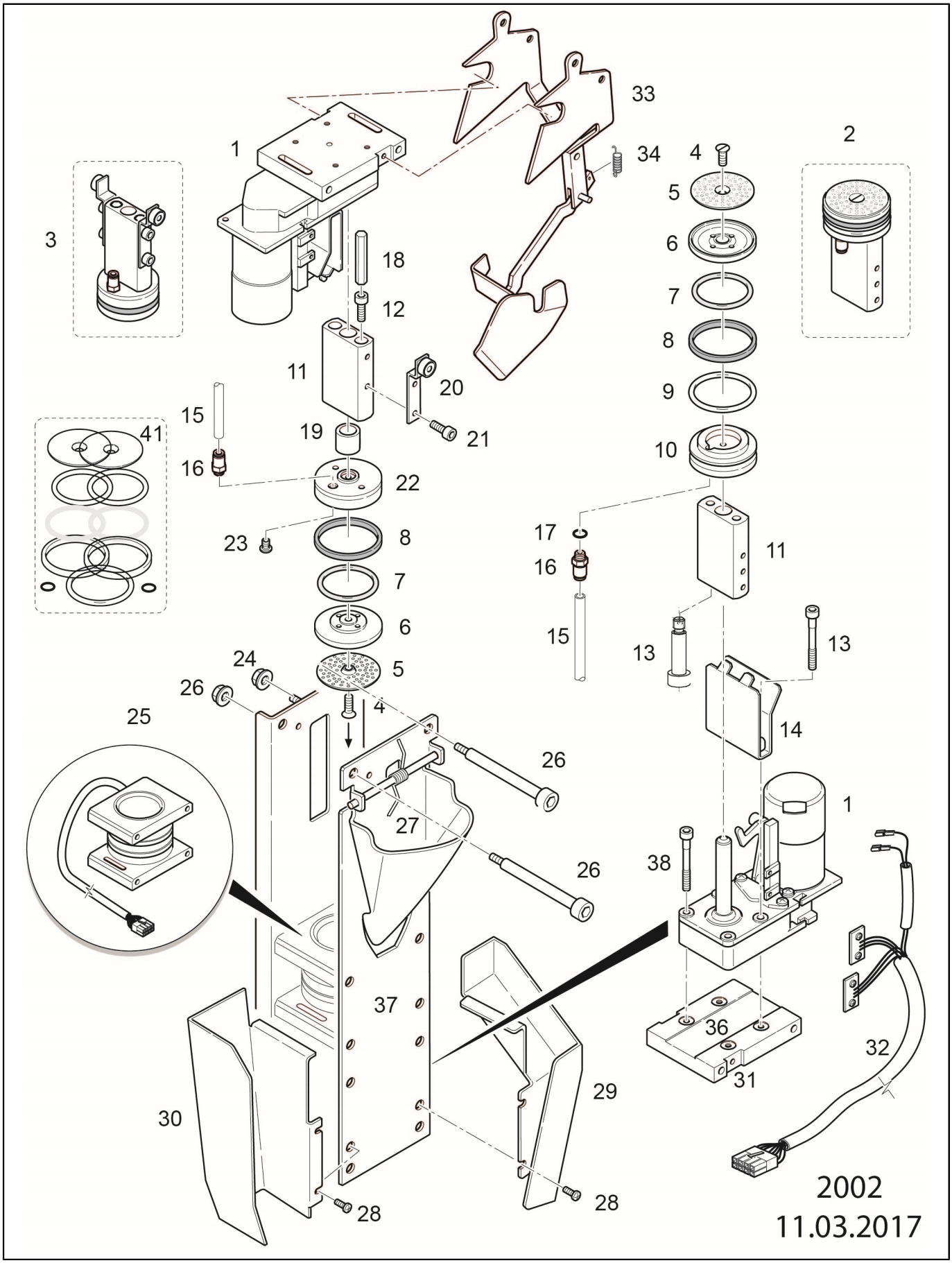
1
2
3
4
5
6
7
8
9
10
11
12
13
14
15
16
17
18
19
20
21
22
23
24
25
26
27
28
29
30
31
32
33
34
36
37
38
41
2002
11.03.2017

Pos.	Code	Description	Notes
1	34010009	Spindle Motor 24V 61 Mm	FN 12005659 pin 83930
2	00100510.001	Lower Brewing Piston Nbup D. 44,0Mm	
3	00100514.001	Upper Piston Assay. Nbup D. 44,0Mm	
4	00001176	Countersunk Screw M4X12 Mm	
5	00060116	Brewing Sieve D. 44 Mm	
6	00054861	Filter Carrier	
7	00100136.001	O-Ring 31,35 X 3,53 Silicone 70Sh Red	
8	00039064	Turcon Ring 39 X 44 X 4	
9	00100506.001	O-Ring 36,09 X 3,53 Silicone 70Sh	
10	36930110	Lower Piston Gr. Bc18	
11	10701050	Piston Shaft With Magnet	
12	0000930		
13	00000935	Hex Socket Head Screw M5 X 30 Mm	
14	00100523.001	Piston Guide Plate	
15	38228072	Teflon Hose Fep D. 4,0 X 2,5	
16	69200133	Straight Connector D.4 X M5	
17	00060283	O-Ring 4 X 1,2 F	
18	00045032	Nut	
19	30001048	Spacer Piston Guide	
20	00054433	Bracket For Upper Piston	
21	00000928	Hex Socket Head Screw M4 X10 Mm	
22	36930111	Upper Piston Group Bc18	
23	00048550	Flow Limiter D. 0.7	
24	00001518	Keps Nut M4	
25	00054087	Brewing Cylinder Assay. With Heater	
26	00001518 00054080 00054940	Keps Nut M4 Bolt M4 Bolt With Nut M4	
27	00060858	Transmission Assay.	
28	00046844	Screw M4 X 8 Mm	
29	10705718	Shute	
30	00048747	Grounds Slide	
31	00054220	Guiding Pin	
32	00053602	Spindle-Motor Wiring With Hall Sensor	
33	00057101	Ejector Assay.	
34	00053559	Spring	
35	00053560	Spring	
36	10701049	Spindle Motor Bracket With Cylindric Pin	2nd generation spindle motor L61 (ID 34010009)
37	10054001	Brewing Group One L61	FN 12005659 pin 83930
38	37420300	Elastic Washer 3 X 0,8	
41	00057446	Gasket Kit Brewing Group Bc18	

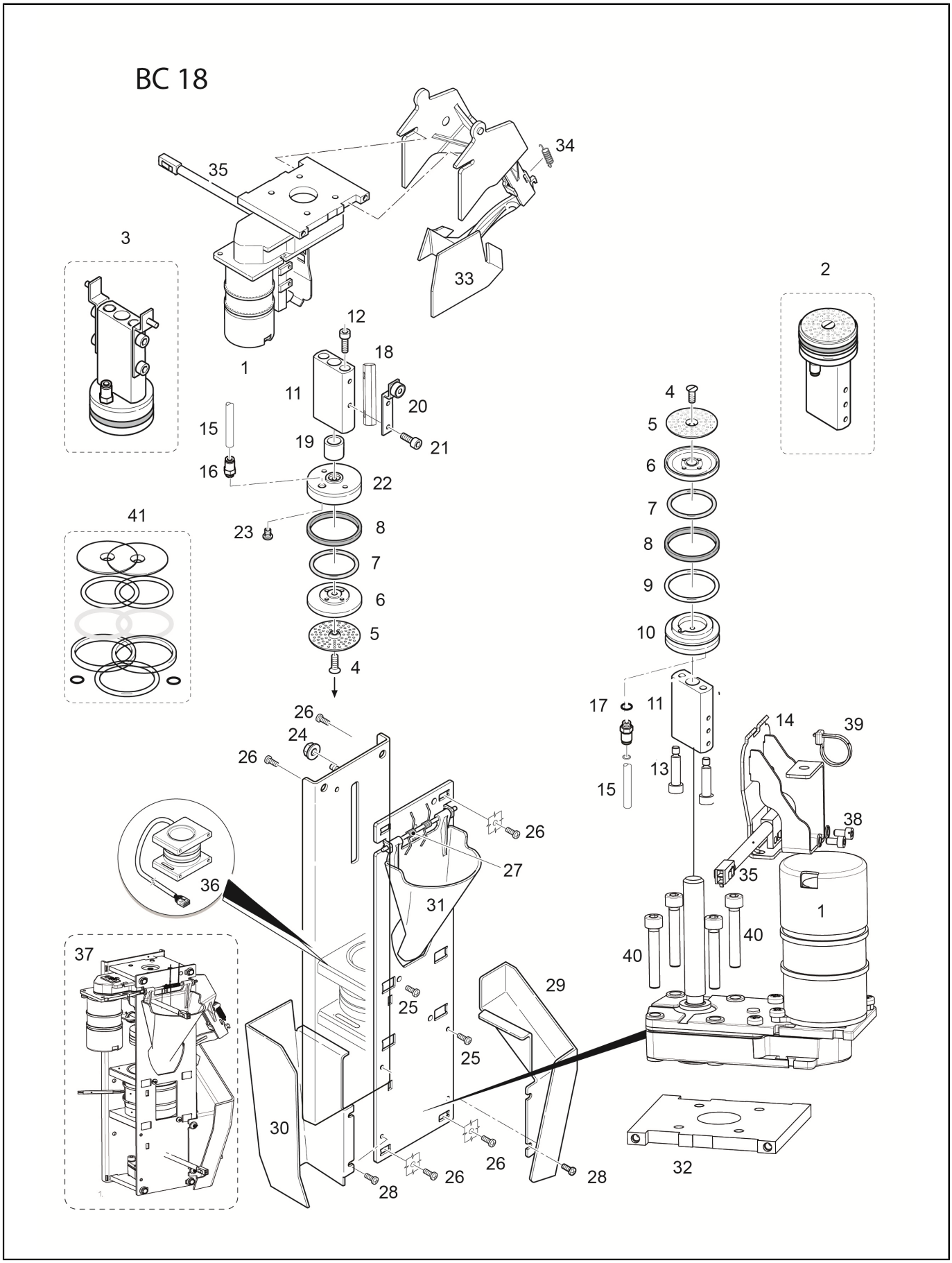
BC 18
35
34
3
33
2
12
18
1
11
20
4
15
19
21
5
6
16
22
7
41
23
8
8
7
9
6
10
5
4
17
11
26
14
39
24
26
13
15
26
38
27
36
35
31
1
37
40
40
29
25
25
30
26
26
28
28
32

2002_02 - Coffee Brewing Group (BC18) from S/N 12009467

Pos.	Code	Description	Notes
1	10701051	Spindle Motor With Sensor	for Egro ONE: S/N 12009467 PIN 108293
2	10700177	Lower Piston Bc18	
3	10700176	Upper Piston Bc18	
4	00001176	Countersunk Screw M4X12 Mm	
5	00060116	Brewing Sieve D. 44 Mm	
6	00054861	Filter Carrier	
7	00100136.001	O-Ring 31,35 X 3,53 Silicone 70Sh Red	
8	00039064	Turcon Ring 39 X 44 X 4	
9	00100506.001	O-Ring 36,09 X 3,53 Silicone 70Sh	
10	36930110	Lower Piston Gr. Bc18	
11	10701050	Piston Shaft With Magnet	piston shaft for BC18, ATTENTION to the magnet position. (could be used also on L61 or previous groups, put the magnet on the opposite side) albero pistone per BC18, ATTENZIONE alla posizione del magnete. (può essere utilizzato su gruppi L61 o precedenti posizionando al contrario il magnete)
12	00000930	Screw M4X20	
13	00048548	Hex Socket Head Screw For Peek Pistonm4 X 15 Mm	
14	32331498	Piston Guide Reed	
15	38228072	Teflon Hose Fep D. 4,0 X 2,5	
16	69200133	Straight Connector D.4 X M5	
17	00060283	O-Ring 4 X 1,2 F	
18	00045032	Nut	
19	30001048	Spacer Piston Guide	
20	32331443	Bracket Upper Piston	
21	00000928	Hex Socket Head Screw M4 X10 Mm	
22	36930111	Upper Piston Group Bc18	
23	00048550	Flow Limiter D. 0.7	
24	00001521	Keps Nut M5	
25	37155011	Screw Atf Pt 4X10 Tcb Ph Inox	
26	37040409	Screw M4 X 8 Te	
27	00060858	Transmission Assay.	
28	00046844	Screw M4 X 8 Mm	
29	38120120	Spindle Motor Protection	
30	00048747 38120119	Grounds Slide Grounds Slider	Fit for all generation brewing unit (L61/ BC18)/ passt für alle Generationen von Brühgruppen (L61/BC18) does not fit for Automatic spout - use metal version 00048747 / passt nicht für Automatischen Auslauf - Metall Ausführung verwenden 00048747
31	38120115	Coffee Powder Funnel	
32	24300010	Spindle Motor Plate	
33	10700178	Ejector Brewing Group	
34	39110026	Spring Ejector	
35	34020125	End Switch Spindle Motor	
36	10701036	Brewing Chamber Bc18	
37	10054002	Brewing Group Bc18	
38	37060306 37420300	Screw M3 X 6 Tcei Elastic Washer 3 X 0,8	
39	34200071	Fixing Cable Clamp	
40	00000935	Hex Socket Head Screw M5 X 30 Mm	

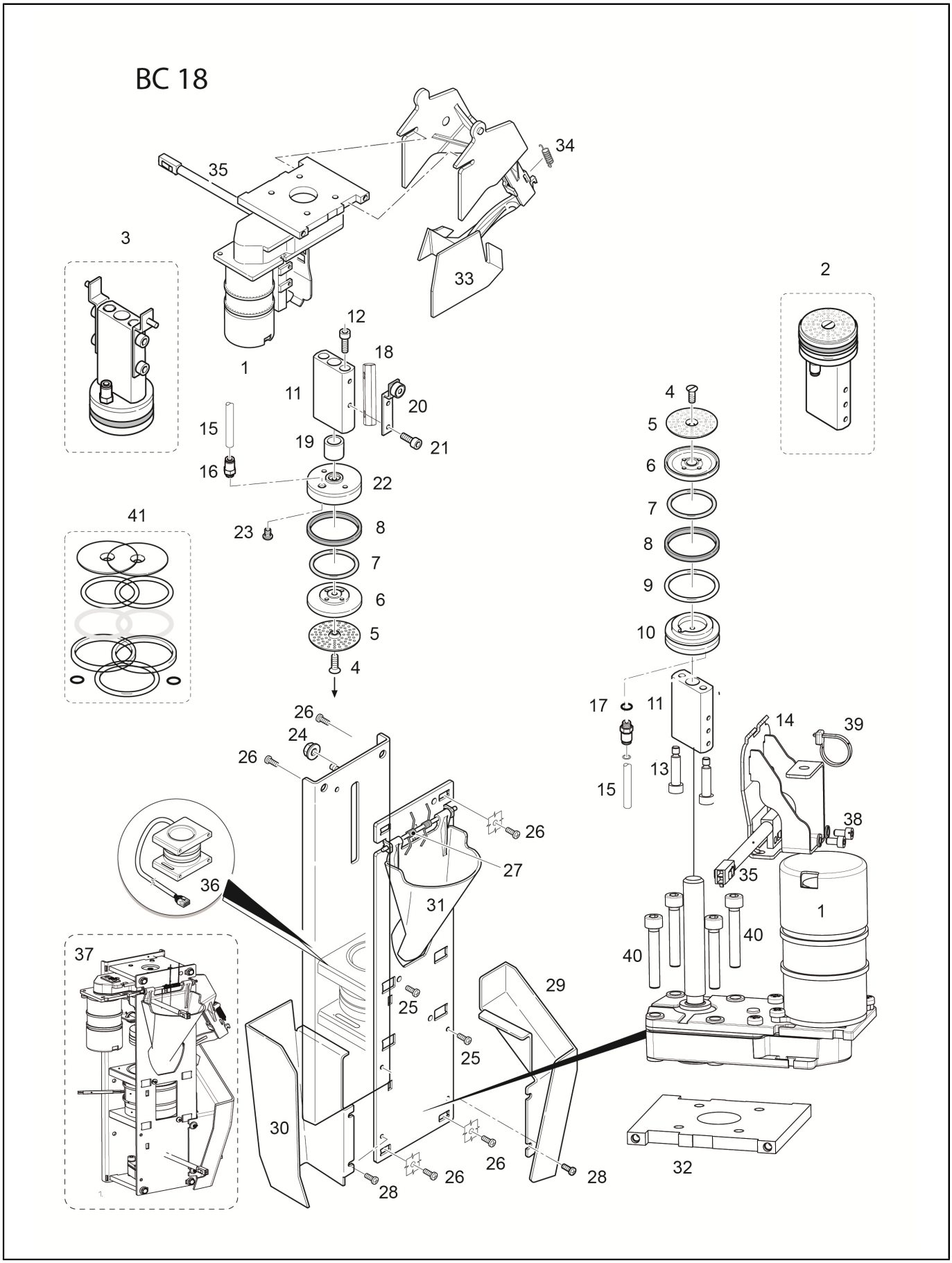
BC 18
35
34
3
33
2
12
18
1
11
20
4
15
19
21
5
6
16
22
7
41
23
8
8
7
9
6
10
5
4
17
11
26
14
39
24
26
13
15
38
26
27
35
36
31
1
40
40
37
29
25
25
30
26
26
28
28
32

Pos.	Code	Description	Notes
	37040409	Screw M4 X 8 Te	
41	00057446	Gasket Kit Brewing Group Bc18	

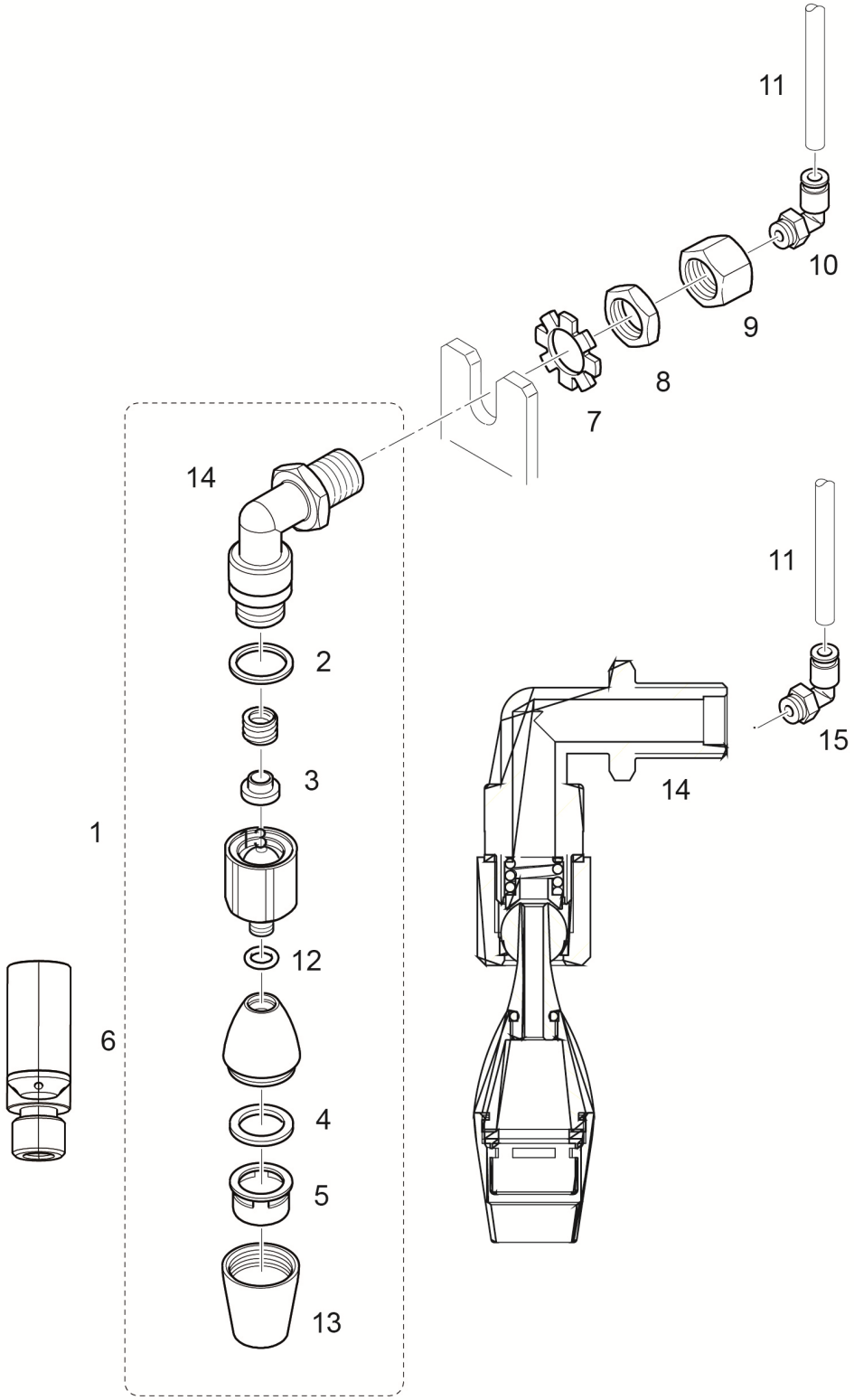
11
10
9
8
7
14
11
2
15
3
14
1
12
6
4
5
13

Pos.	Code	Description	Notes
1	10705245	Connection+Movement Water Inox	
2	36220009	Gasket Nut Note Teflon	
3	36930017	Teflon Gasket For Steam Wand Nut	
4	36301040	O-Ring Filter Jet Breaker	
5	10049014	Water Outlet	
	25135019	Mixing Nozzle	
6	23000144	Extension Inox M10 X 23Mm	
	25128014	Extension Inox M10 X 76Mm	
	25128015	Extention Inox M10 X 59Mm	
7	37431600	Outer Toothed Washer D16	
8	26220005	Flat Nut 3/8	
9	00100855.001	Sleeve	
10	69200140	Elbow Connector6 X G1/8 Ppsu	
	69200146	Elbow Connector 6 X G1/8	
11	38228073	Teflon Hose Fep D. 6 X 4	
12	36404022	O-RING 6,4 X 1,9 R5A	
13	25135017	Upperpart Water Sprayer	
14	20200113	Hot Water Connection Brass	
15	69200140	Elbow Connector6 X G1/8 Ppsu	

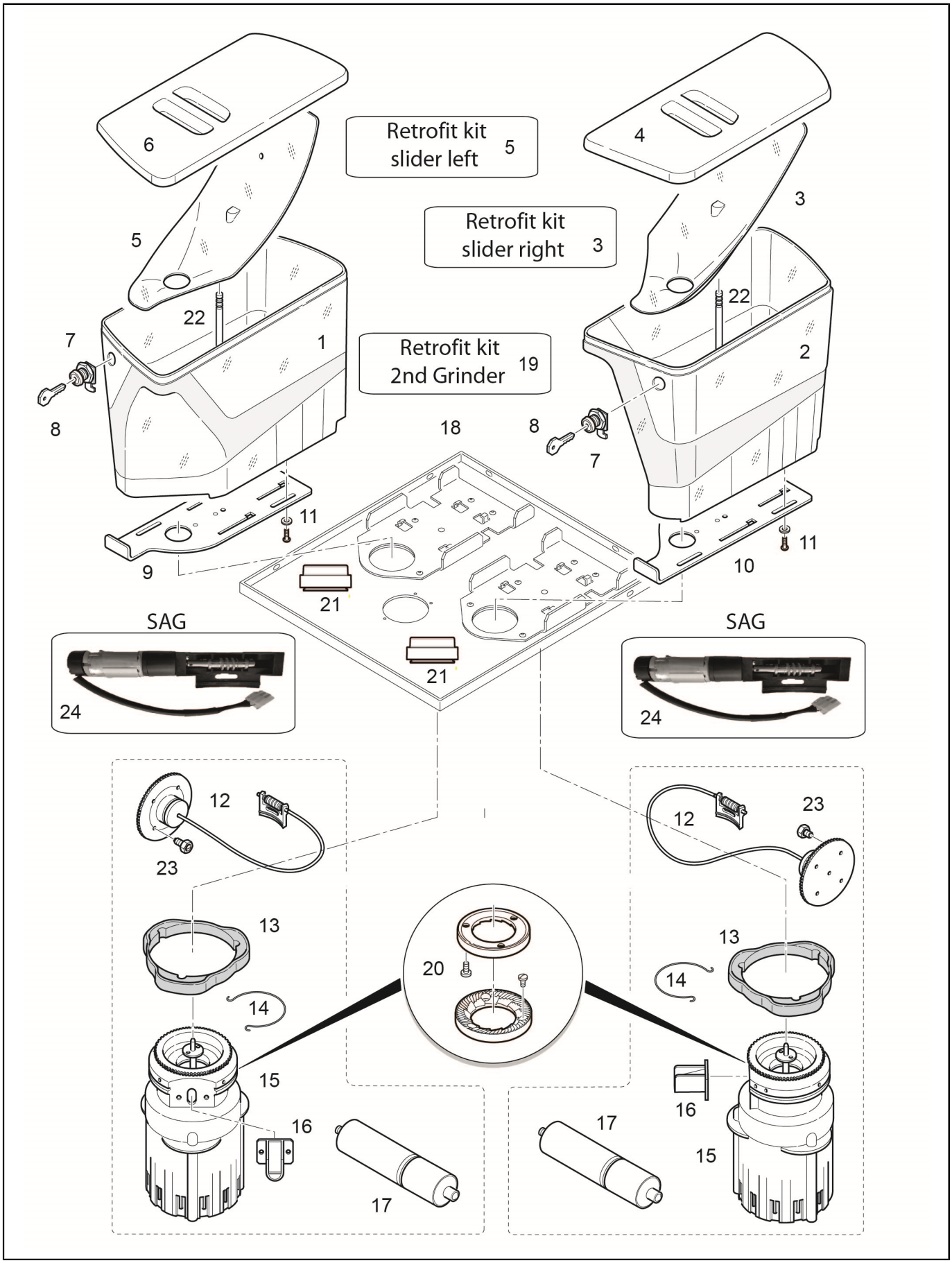
Retrofit kit slider left 5
Retrofit kit slider right 3
Retrofit kit 2nd Grinder 19
SAG
SAG
1
2
3
4
5
6
7
8
9
10
11
12
13
14
15
16
17
18
19
20
21
22
23
24

Pos.	Code	Description	Notes
1	00100878.001	Bean Hopper Assay. Left Without Lock	
	00100878.002	Bean Hopper Assay. Left With Lock	
2	00100877.001	Bean Hopper Assay. Right Without Lock	
	00100877.002	Bean Hopper Assay. Right With Lock	
3	38120580	Slider Bean Hopper Right One/15	
4	38120075	Lid For Bean Hopper Right	
5	38120581	Slider Bean Hopper Left One/15	
6	38120076	Lid For Bean Hopper Left	
7	10705529	Lock Assay. Ronis M15X17,5 With Hook 25.5Mm	
	69000337	Lock 90 M15 X 17,5	
8	69000339	Serial Key Cod 200C	
9	32331404	Slider Beans Hopper Left	
10	32331403	Slider Beans Hopper Right	
11	37113508	Selfscrew M3X8	
	37410300	Plane Washer D3.2X9	
12	10701209	Grinder Adjustment Right/15	
	10701210	Grinder Adjustment Left/15	
	10705715	Grinder Adjustement Left (Welded Frame)	
	10705716	Grinder Adjustment Right (Welded Frame)	
13	36990026	Rubber Silent Block One	
14	00101048.001	Stop Spring	
15	10705713	Grinder Assay. 220V - 50/60Hz Right	
	10705714	Grinder Assay. 220V - 50/60Hz Left	
16	00100565.001	Powder Spout(Standard)	
17	00101070.001	Capacitor 14 Mf 400Vac P2 Ul	
	34020034	Capacitor 12,5Mf 450V Ul	
18	10705706	Top Lid 2 Grinders	
	10705717	Top Lid 1 Grinder	
19	00101000.001	Retrofit Kit 2Nd Grinder	
20	00046933	Grinder Plates, Pair D. 54Mm With Screw	
21	36990025	Seal (Collar) / Grinder	
22	23000128	Pin Bean Hopper One Self	
23	69200073	Blocking Srewm8	
24	34010015A	Motor 24V Sag With Encoder	

Pos.	Code	Description	Notes
1	00100802.001	Steam Boiler Assy. 3 Kw	
2	00054063	INSULATION	
	36901955	Sticky Tape 3M 50Mmx55Mt	
3	10700270	HEATING ELEMENT 230V/3000W WITH GASKET	
4	10700998	Service Kit Steam Boiler	
	36201035	Gasket Steam Boiler Resistance Garlock Egro One	
5	00100351.001	Gasket Steam Boiler	
6	00002240	O-Ring 14 X 1,78 Epdm 70Sh	
7	00100267.001	Steam Connection	
8	00100268.002	Level Sensor 140 Mm With Gasketg1/4	
9	00100793.001	Elbow Connector 6 X 6 Mm	
10	30001047	Suction Pipe	
11	00009917	GASKET 12,5 X 9,8 X 1,2 COPPER	
12	00100300.001	Temperature Limiter 140 C	
13	34160024	Lamellar Contact	
	37030408	Screw M 4 X 8	
	37430400	Toothed Washer D4	
14	34200288	Pressure Sensor	
15	00100869.001	Adapter Nipple D. G 1/4 X 3/8	
16	10705232	Pipe For Pressure Transducer	
17	00100059.001	Double Nipple G 1/4 X G 1/4	
18	00100236.001	Manometer 4 Bar	
19	10705233	Pipe For Manometer	
20	00044464	Gasket 16,5 X 13,2 X 1,5 Copper	
	10060058	ANTIVACUUM VALVE ONE	
	36220009	Gasket Nut Note Teflon	
	36404053	O-Ring 5,28 X 1,78 Epdm	
21	00010152	Threaded Nipple	
	00019974	Gasket 14,8 X 9 X 2 Copper	
	00027170	Union Nut G3/8 X 13,5Mm	
	00039067	Relief Valve, Steam	
	00045682	Splash Guard-Hose D. 16,0 X 45,0	
22	00060160	Brass Closing Screw	
23	00100016.005	Plunger 3/2 Steam T30 (Acl)	
	00100116.005	Operator Kit 3/2 Ways Steam (Acl) T30	
24	00057912	Threaded Elbow, Maled. 6 Mm X G1/8	
25	37411001	Plane Washer D.10	
26	00001484	Nut M10	
27	00100013.001	O-Ring 17,17 X 1,78 F	
28	00053752	THREADED MALE NIPPLE D. 6 MM X G 1/8	
29	00056751	Guinding Pin D.8X8	
30	00009934	LOCKING CAPG 1/8 X 14	
31	00100232.001	THREADED ELBOW, MALE D. 6 MM X G1/4	
32	37040621	Screw M 6 X 20 Inox	
33	37420601	Elastic Washer D. 6	
34	00100825.001	Steam Valve Block Assay.	
35	37040510	Screwm5 X 10Mm	
36	36404054	O-Ring 12,42 X 1,78 V 70Sh 2050	
37	23000194	Plate Steam Boiler 100 X 1/4	

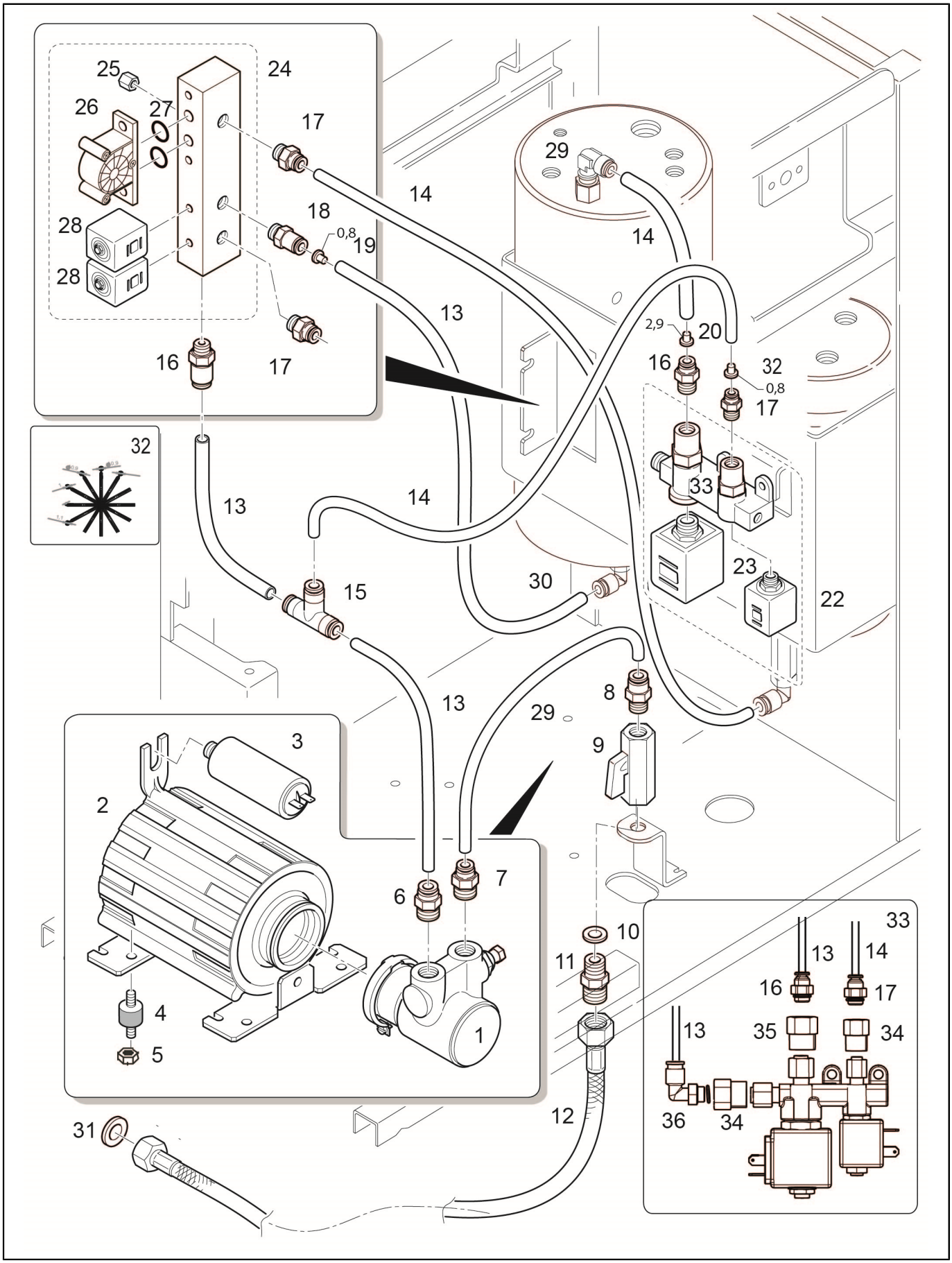
25
24
26
27
17
29
14
18
28
0,8
19
14
28
13
2,9
20
16
32
16
17
0,8
17
32
33
13
14
23
15
30
22
13
8
29
9
3
2
7
6
10
33
11
13
14
16
17
4
35
34
13
1
5
36
34
12
31

Pos.	Code	Description	Notes
1	69000288	Pump Vm 100L/H	
2	00045393	Pump Motor 230 V / 50 Hz - 120 W	
	00046299	Motor 200 V	
	00100367.001	Pump Motor Assay. 230 V 50/60 Hz (Usa)	
3	00042324	Capacitor Assay. 7.0 Mf 200V	
	34020017	Capacitor 6.3Mf Lt155-255	
4	36322006	Anti-Vibrating Device 20 X 20 - M6 X 12 Sh30	
5	00001522	Keps Nut M6	
6	69200165	Straight Connector 6 X G3/8	
7	69200164	Straight Connector 8 X G3/8	
8	69200137	Straight Nipple M8 X G1/4	
9	69200131	BALL TAP G1/4	
10	00058587	Gasket 15 X 7,2 X 2,1 Rubber Epdm Perox	
11	23000288	Double Nipple G3/8 X G1/4	
12	69000737	Flex Pipe Mm1500 Nsf F3/8-F3/8 Check Valve	
13	38228073	Teflon Hose Fep D. 6 X 4	
14	38228072	Teflon Hose Fep D. 4,0 X 2,5	
15	00100897.001	T - Connectord. 6 X 4 X 6 Mm	
16	69200135	Straight Connector G1/8 X 6	
17	69200134	Straight Connector G1/8 X 4	
18	69200190	Check Valve 6 X G1/8	
19	00100899.001	Flow Limiter 0,8	
20	00100939.001	Flow Limiter D. 2.9 X 4	
21	38228074	Teflon Hose Fep D. 8 X 6	
22	34049012	Operator Kit 2/2 Ways Cold Water (T22)	
	34049014	Plunger 2/2 Cold Water T22	
23	34049011	Operator Kit 2/2 Ways Hot Water (T30)	
	34049013	Plunger 2/2 Hot Water T30	
24	00100313.001	Cold Water Valve Block Assay.	before S/N 12011960 PIN 119415 use ACL Valves 34049007 machines produced after S/N 12011960 use SIRAI valves 34040163 su macchine precedenti la N/F 12011960 PIN 119415 utilizzare valvole ACL 34049007 per macchine successive la N/F 12011960 utilizzare valvole SIRAI 34040163
25	00046192	Spacers	
26	00053558	Flowmeter With O-Rings	
27	00055294	O-Ring Kit For Flowmeter	
28	34049006	Plunger 2/2 Water T22 (Acl)	to be used on machine before S/N 12011960 PIN 119415 da utilizzare su macchine precedenti la N/F 12011960 PIN 119415
	34049007	Operator Kit 2/2 Way Water (Acl) T22	to be used on machine before S/N 12011960 PIN 119415 da utilizzare su macchine precedenti la N/F 12011960 PIN 119415
29	38228074	Teflon Hose Fep D. 8 X 6	
30	69200141	Elbow Connector G1/4X6 Ppsu	
31	00019974	Gasket 14,8 X 9 X 2 Copper	
32	38120127	Restriction Ring Little White	
33	10705759	Tea Water Mixer 24V Brass	
34	69200150	Connection M12 X 1,8G	
35	69200151	Connection M10 X 1,8G	
36	69200139	Elbow Connector 4 X G1/8 Ppsu	

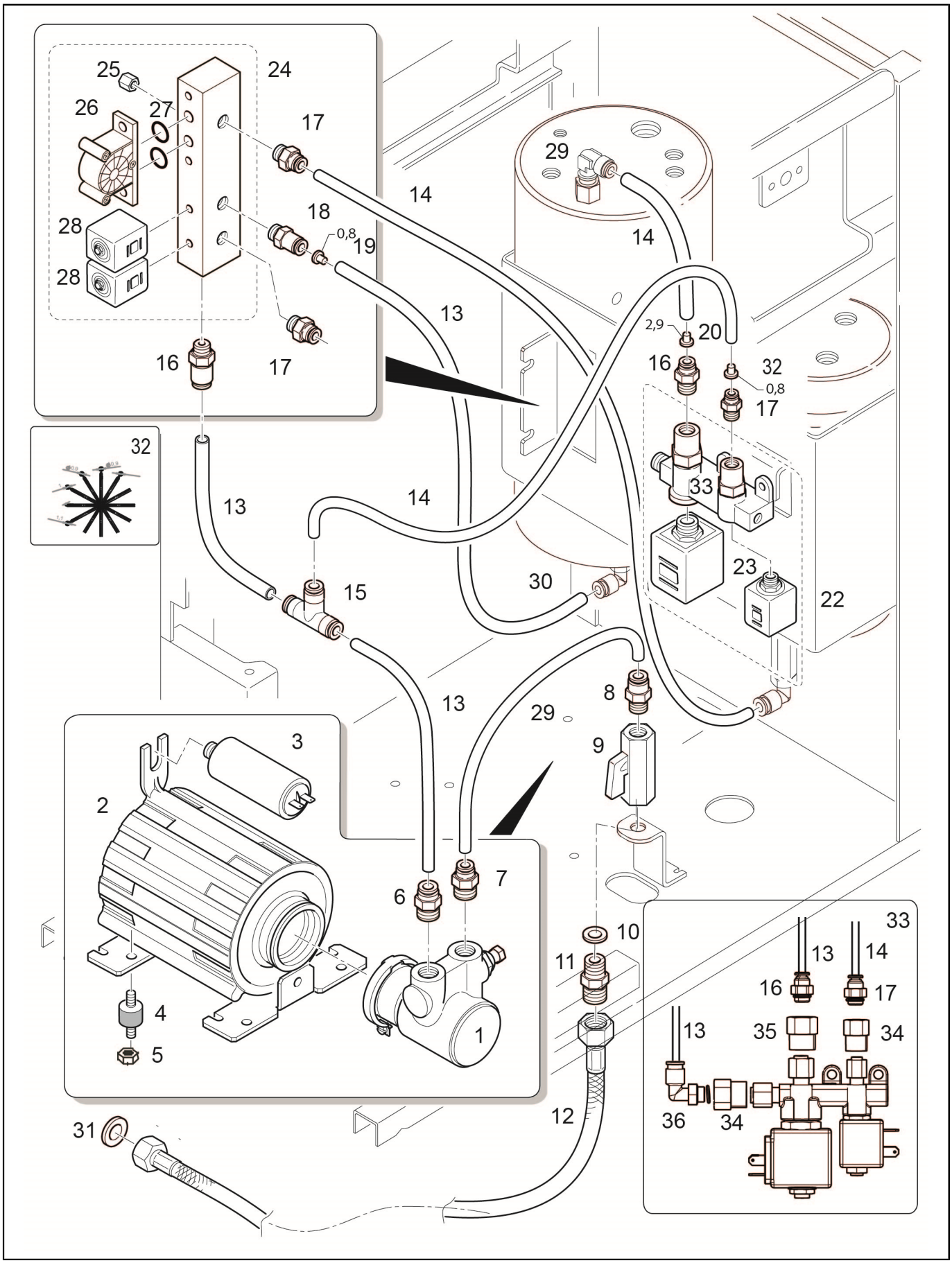
25
24
26
27
17
29
14
18
28
0,8
19
14
28
13
2,9
20
16
32
16
17
0,8
17
32
33
13
14
23
15
30
22
13
8
29
9
3
2
7
6
10
33
11
13
14
16
17
4
35
34
13
1
5
36
34
12
31

Pos.	Code	Description	Notes
	69200140	Elbow Connector6 X G1/8 Ppsu	

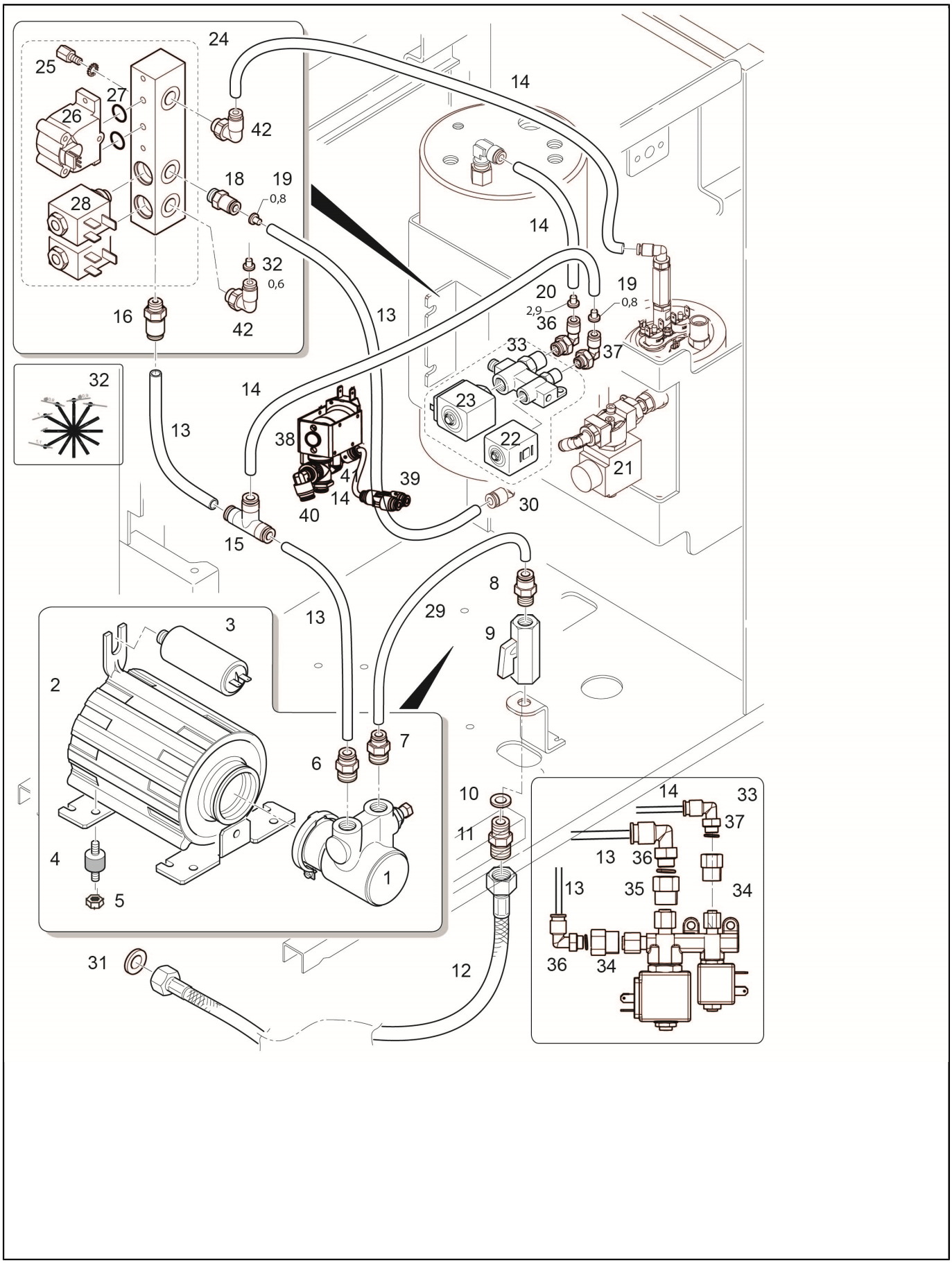
24
25
27
26
42
18
19
0,8
28
32
0,6
16
42
14
14
13
20
2,9
36
19
0,8
33
37
32
14
23
13
38
22
21
41
39
14
40
30
15
8
13
29
3
9
2
7
6
10
14
33
37
11
13
36
4
1
13
35
34
5
36
34
31
12

Pos.	Code	Description	Notes
1	69000288	Pump Vm 100L/H	
2	00045393	Pump Motor 230 V / 50 Hz - 120 W	
3	00042324	Capacitor Assay. 7.0 Mf 200V	
	34020017	Capacitor 6.3Mf Lt155-255	
4	36322006	Anti-Vibrating Device 20 X 20 - M6 X 12 Sh30	
5	00001522	Keps Nut M6	
6	69200136	STRAIGHT NIPPLE M6 X G3/8	
7	69200138	STRAIGHT CONNECTOR G3/8 X 8	
8	69200137	Straight Nipple M8 X G1/4	
9	69200131	BALL TAP G1/4	
10	00058587	Gasket 15 X 7,2 X 2,1 Rubber Epdm Perox	
11	23000288	Double Nipple G3/8 X G1/4	
12	69000737	Flex Pipe Mm1500 Nsf F3/8-F3/8 Check Valve	
13	38228073	Teflon Hose Fep D. 6 X 4	
14	38228072	Teflon Hose Fep D. 4,0 X 2,5	
15	00100897.001	T - Connectord. 6 X 4 X 6 Mm	
16	69200135	Straight Connector G1/8 X 6	
18	69200141	Elbow Connector G1/4X6 Ppsu	
19	00100899.001	Flow Limiter 0,8	
20	00100939.001	Flow Limiter D. 2.9 X 4	
21	00100147.001	Operator Kit 3/2 Way Water T30 (Acl)	
	00100149.001	Plunger 3/2 Water T30 (Acl)	
	10060607	Electrovalve Coffee Boiler	
	34040167	Valve 3/2 24V T30 (Sirai)	
22	34049012	Operator Kit 2/2 Ways Cold Water (T22)	
	34049014	Plunger 2/2 Cold Water T22	
23	34049011	Operator Kit 2/2 Ways Hot Water (T30)	
	34049013	Plunger 2/2 Hot Water T30	
24	00100313.001	Cold Water Valve Block Assay.	on machine before S/N 12011960 PIN 119415 use ACL valves 34049007 su macchine precedenti la N/F 12011960 PIN 119415 utilizzare valvole ACL 34049007 from S/N 12011960 PIN 119415 use SIRAI Valves 34040163 dalla N/F 12011960 PIN 119415 utilizzare valvole SIRAI 34040163
25	00046192	Spacers	
26	00053558	Flowmeter With O-Rings	
27	00055294	O-Ring Kit For Flowmeter	
28	34040163	KIT OPERATOR 2/2 T22 SIRAI	to be used on machine after S/N 12011960 PIN 119415 da utilizzare su macchine successive la N/F 12011960 PIN 119415
	34040164	Plunger 2/2 T22 (SIRAI)	to be used on machine after S/N 12011960 PIN 119415 da utilizzare su macchine successive la N/F 12011960 PIN 119415
	34049006	Plunger 2/2 Water T22 (Acl)	to be used on machine before S/N 12011960 PIN 119415 da utilizzare su macchine precedenti la N/F 12011960 PIN 119415
	34049007	Operator Kit 2/2 Way Water (Acl) T22	to be used on machine before S/N 12011960 PIN 119415 da utilizzare su macchine precedenti la N/F 12011960 PIN 119415
29	38228074	Teflon Hose Fep D. 8 X 6	
30	69200141	Elbow Connector G1/4X6 Ppsu	

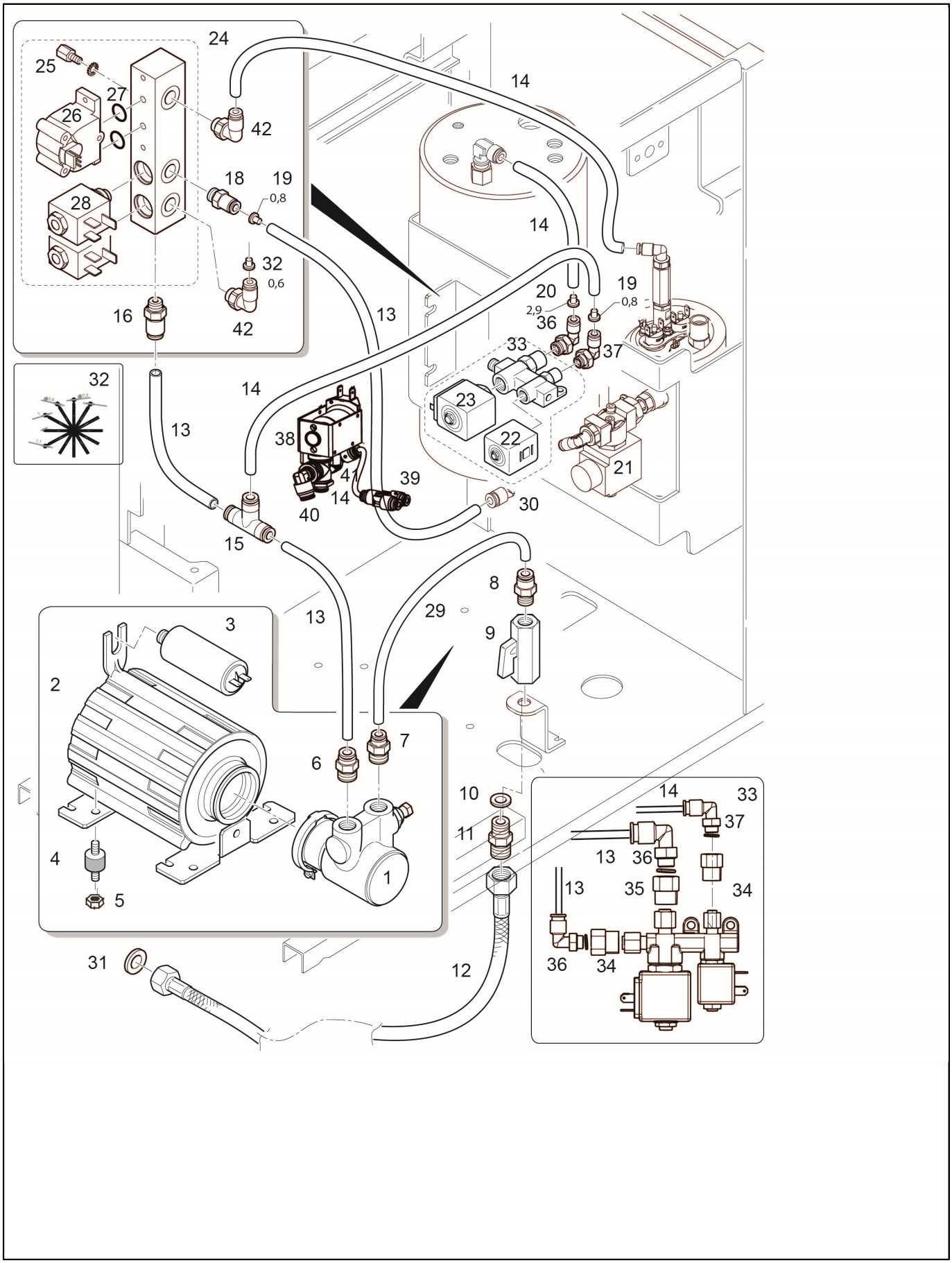
24
25
27
26
42
18
19
0,8
28
32
0,6
16
42
14
14
13
20
2,9
36
19
0,8
33
37
32
14
23
13
38
22
21
41
39
14
40
30
15
8
13
29
3
9
2
7
6
10
14
33
37
11
13
36
4
1
13
35
34
5
36
34
31
12

Pos.	Code	Description	Notes
31	00019974	Gasket 14,8 X 9 X 2 Copper	
32	38120127	Restriction Ring Little White	
33	10705756	Economizer 24V	
34	00100867.001	SLEEVEM12 X 1 G 1/8	
35	00100868.001	SLEEVEM10 X 1 G 1/8	
36	00053754	Threaded Elbow, Male D. 6 Mm X G1/8	
37	69200139	Elbow Connector 4 X G1/8 Ppsu	
38	34040156	Valve 3/2 24V	
39	69200115	Y CONNECTION D 4	
40	69200130	Elbow Connector 6X6	
41	00060076	PLUG IN ELBOW CONNECTOR 6X4	
42	69200142	Elbow Connector G1/4X4 Ppsu	

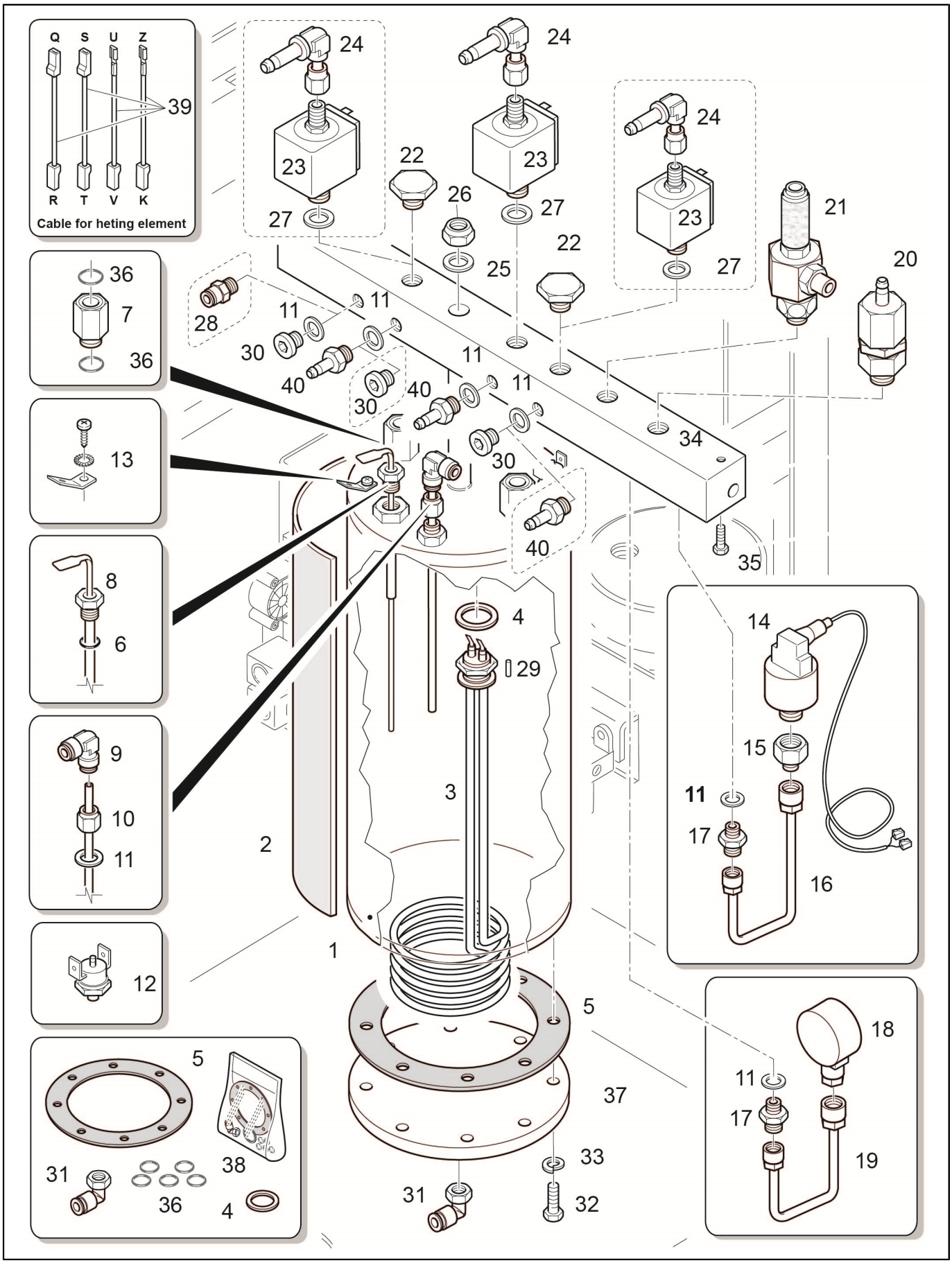
Q S U Z
R T V K
Cable for heting element
39
24
23
27
22
26
25
21
20
36
7
28
11
30
40
34
35
13
8
6
9
10
4
29
3
2
1
14
15
16
17
12
5
37
18
19
31
38
33
32

2008 - Steam Boiler-Steam Valve Block TOP MILK

Pos.	Code	Description	Notes
1	10020018	Steam Boiler Assy. 2,5Kw	ONLY FOR SINGAPORE VERSION
	10020056	Steam Boiler One 3kw 2022	
	10702045	Steam Boiler assy. 3kw One/Next Klixon	FOR ALL OVER THE WORLD EXCEPT FOR SINGAPORE MARKET
2	36901955	Sticky Tape 3M 50Mmx55Mt	
	69000450	Steam boiler cover ONE/NEXT	
3	10701254	Heating Element/15 230V/3Kw+Gasket One-S50	FOR ALL OVER THE WORLD EXCEPT FOR SINGAPORE
	10701542	Steam Heating Element 2.5W	ONLY FOR SINGAPORE VERSION
4	36201035	Gasket Steam Boiler Resistance Garlock Egro One	
5	00100351.001	Gasket Steam Boiler	
6	36404039	O-Ring 14 X 1,78 V 75Sh 2056	
7	23000535	connection g1/4 steam boiler One/Next	
8	00100268.002	Level Sensor 140 Mm With Gasketg1/4	
9	00100793.001	Elbow Connector 6 X 6 Mm	
10	30001047	Suction Pipe	
11	27350014	Copper Gasket 12.5X9.8X1.5	
12	00100300.001	Temperature Limiter 140 C	
13	34160024	Lamellar Contact	
	37030408	Screw M 4 X 8	
	37430400	Toothed Washer D4	
14	10120004	Cable Pressure Probe	
	34200288	Pressure Sensor	
15	00100869.001	Adapter Nipple D. G 1/4 X 3/8	
16	10705232	Pipe For Pressure Transducer	
17	00100059.001	Double Nipple G 1/4 X G 1/4	
18	00100236.001	Manometer 4 Bar	
19	10705233	Pipe For Manometer	
20	00044464	Gasket 16,5 X 13,2 X 1,5 Copper	
	10060060	Vacuum Valve	
	36130008	Seat Teflon Nsf	
	36220009	Gasket Nut Note Teflon	
	36404013	O-Ring Silicone 2031	
	36404053	O-Ring 5,28 X 1,78 Epdm	
21	00019974	Gasket 14,8 X 9 X 2 Copper	
	00027170	Union Nut G3/8 X 13,5Mm	
	00039067	Relief Valve, Steam	
	00045682	Splash Guard-Hose D. 16,0 X 45,0	
	230100009	nipple g1/4	
22	00060160	Brass Closing Screw	
23	00100016.005	Plunger 3/2 Steam T30 (Acl)	
	00100116.005	Operator Kit 3/2 Ways Steam (Acl) T30	
24	00057912	Threaded Elbow, Maled. 6 Mm X G1/8	
25	37411001	Plane Washer D.10	
26	00001484	Nut M10	
27	00100013.001	O-Ring 17,17 X 1,78 F	
28	69200135	Straight Connector G1/8 X 6	
29	00056751	Guinding Pin D.8X8	
30	23000299	Cap G1/8 Boiler One/Zero	
31	69200141	Elbow Connector G1/4X6 Ppsu	
32	37040621	Screw M 6 X 20 Inox	
33	37420601	Elastic Washer D. 6	
34	00100825.001	Steam Valve Block Assay.	
35	37040510	Screwm5 X 10Mm	

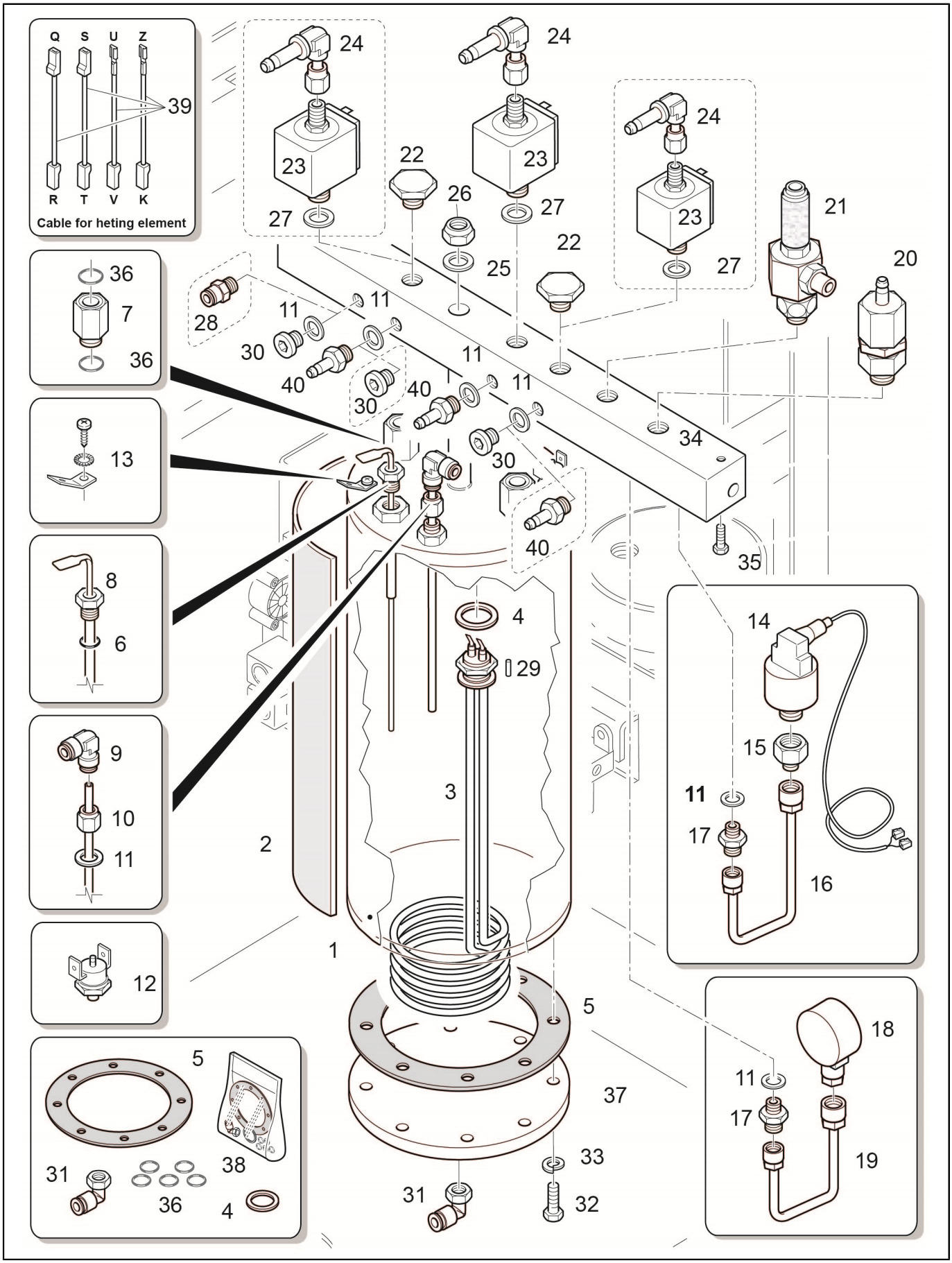
Q S U Z
R T V K
Cable for heting element
39
24
23
27
22
26
25
21
20
36
7
28
11
30
40
34
35
13
8
6
9
10
4
29
3
2
1
14
15
16
17
18
19
5
37
33
32
31
38

Pos.	Code	Description	Notes
36	36404054	O-Ring 12,42 X 1,78 V 70Sh 2050	
37	23000194	Plate Steam Boiler 100 X 1/4	
38	10700998	Service Kit Steam Boiler	
39	10110008	Kit Egro Boiler Wiring	
40	00049966	Threaded Male Nipple With Washer G 1/8	
	69200135	Straight Connector G1/8 X 6	XP/TM version NO NMS

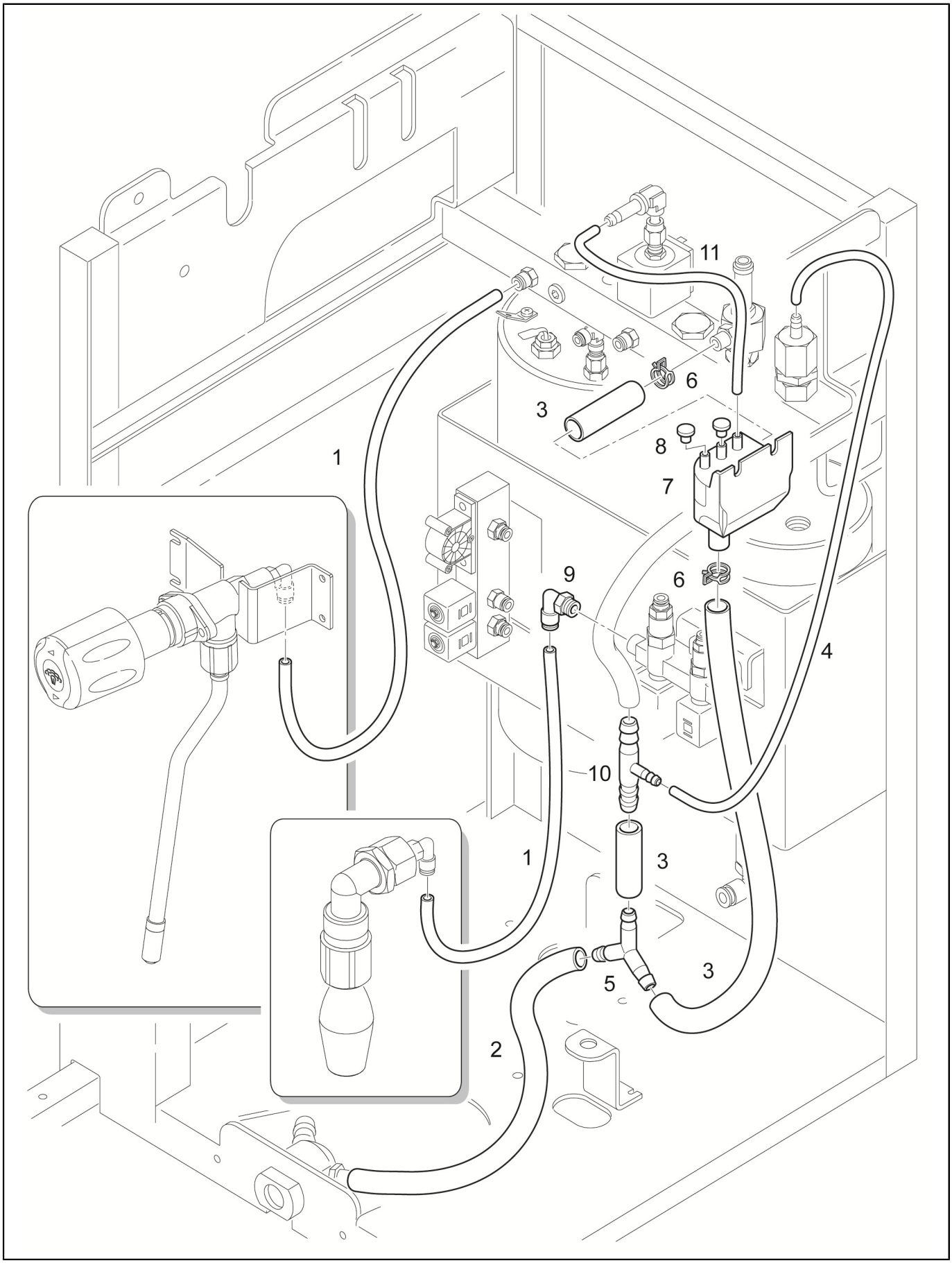
11
6
3
8
1
7
9
6
4
10
1
3
5
3
2

Pos.	Code	Description	Notes
1	38228073	Teflon Hose Fep D. 6 X 4	
2	00004475	Silicon Hose D. 12 X 8 Mm	
3	00004473	Silicon Hose D. 14 X 9 Mm	
4	00048474	Silicon Hose D. 7 X 4 Mm	
5	00046806	Y Unit D. 12 Mm	
6	00055795	Wire Hose Clamp 17,3 Mm	
7	10700232	Valve Drain Tray	
	38120109	Drain Collector Lower Part	
	38120110	Drain Collector Upper Part	
8	00004474	Silicon Hose D. 8 X 5 Mm	
9	69200140	Elbow Connector6 X G1/8 Ppsu	
10	00045714	Reducing T Connector D. 12 - 6 - 12 Mm	
11	00100862.003	Drain Pipe Kit	

Pos.	Code	Description	Notes
1	10020001	Boiler 230V 2500W Coffee	
	10020002	Boiler 230V 2500W Dhe Assy.	
2	10110389	Electric Box Zero	
3	38228072	Teflon Hose Fep D. 4,0 X 2,5	
4	00100167.001	THREADED ELBOW, MALE D. 4 MM X G 1/4	
5	00055941	O-Ring Fkm V	
6	23000151	HOSE CONECTOR	
7	00009917	GASKET 12,5 X 9,8 X 1,2 COPPER	
8	00100147.001	Operator Kit 3/2 Way Water T30 (Acl)	
	00100149.001	Plunger 3/2 Water T30 (Acl)	
	10060607	Electrovalve Coffee Boiler	
	34040045	Valve 3/2 24V (ACL)	
9	34200294	Clicson Thermostat 127 One	
10	69000243	Pipe Capillary Manometer F1/8-M1/8	
11	10046044	EXPANSION VALVE/ELECTROVALVE COFFEE BOILER PIPE	
12			
13	00053753	THREADED ELBOW, MALE D. 4 MM X G1/8	
14	00054067	Check Valve D. G 1/8	
15	00054064	Threaded Male Nipple (Usa)	
16	00009917	GASKET 12,5 X 9,8 X 1,2 COPPER	
17	00001518	Keps Nut M4	
18	10060605	Pressure Relief Valve 12 X G1/4	
19	00002207	O-Ring 8 X 1 Epdm	
	00050096	Coffee Spout Without Checkvalve	
	00054647	Hot Water Spout By Self Service	
20	10042099	PIPE EXPANSION VALVE COFFEE BOILER	
22	35002511	Manometer Coffee Boiler D.40 0-25 Bar Cl 1,6	
23	00004473	Silicon Hose D. 14 X 9 Mm	
24	00100243.002	TEMPERATURE SENSOR	
	10110729	Extension Cable Temperature Sensor	
25			
26	00050095	Pressure Valve By Pass	
27	00100558.001	Valve 2/2 Water T30 (Acl)	
	10060606	Electrovalve Powder-Bypass	
28	10705802	DRAIN CONNECTION	
29	23000135	Nut Drain Connection	
30	10110704	Wiring Set J31 By Pass One	

Pos.	Code	Description	Notes
1	69000288	Pump Vm 100L/H	
2	00045393	Pump Motor 230 V / 50 Hz - 120 W	
	00046299	Motor 200 V	
	00100367.001	Pump Motor Assay. 230 V 50/60 Hz (Usa)	
3	00042324	Capacitor Assay. 7.0 Mf 200V	
	34020017	Capacitor 6.3Mf Lt155-255	
4	00001522	Keps Nut M6	
	36322006	Anti-Vibrating Device 20 X 20 - M6 X 12 Sh30	
5	00019974	Gasket 14,8 X 9 X 2 Copper	
6	00054348	THREADED MALE NIPPLE ï¿½ 6 - G 3/8	
7	00058108	THREADED MALE NIPPLE D. 8 X G 3/8	
8	00058107	THREADED MALE NIPPLED. 8 MM X G 1/4	
9	00048560	MAIN TAP	
10	00058587	Gasket 15 X 7,2 X 2,1 Rubber Epdm Perox	
11	00010212	DOUBLE NIPPLE D. G3/8 X G 1/4	
12	69000737	Flex Pipe Mm1500 Nsf F3/8-F3/8 Check Valve	
13	38228073	Teflon Hose Fep D. 6 X 4	
14	38228072	Teflon Hose Fep D. 4,0 X 2,5	
15	00100897.001	T - Connectord. 6 X 4 X 6 Mm	
16	00053752	THREADED MALE NIPPLE D. 6 MM X G 1/8	
17	00053753	THREADED ELBOW, MALE D. 4 MM X G1/8	
18	00100233.001	NON-RETURN VALVE D. 6 X G 1/8	
19	00100899.001	Flow Limiter 0,8	
20	00100939.001	Flow Limiter D. 2.9 X 4	
21	38228074	Teflon Hose Fep D. 8 X 6	
22	34049012	Operator Kit 2/2 Ways Cold Water (T22)	
	34049014	Plunger 2/2 Cold Water T22	
23	34049011	Operator Kit 2/2 Ways Hot Water (T30)	
	34049013	Plunger 2/2 Hot Water T30	
24	00100294.001	Cold Water Valve Block	
	00100294.002	Cold Water Valve Block	
	00100313.001	Cold Water Valve Block Assay.	
	00100313.002	Cold Water Valve Block Assay.	
25	00046192	Spacers	
26	00053558	Flowmeter With O-Rings	
27	00055294	O-Ring Kit For Flowmeter	
28	34049006	Plunger 2/2 Water T22 (Acl)	
	34049007	Operator Kit 2/2 Way Water (Acl) T22	
29	00100793.001	Elbow Connector 6 X 6 Mm	
30	10705930		
31	00060233	ANGLE MALE NIPPLE D. G1/8 X 6 MM	
32	38120127	Restriction Ring Little White	
33	00100867.001	SLEEVEM12 X 1 G 1/8	
34	00100868.001	SLEEVEM10 X 1 G 1/8	

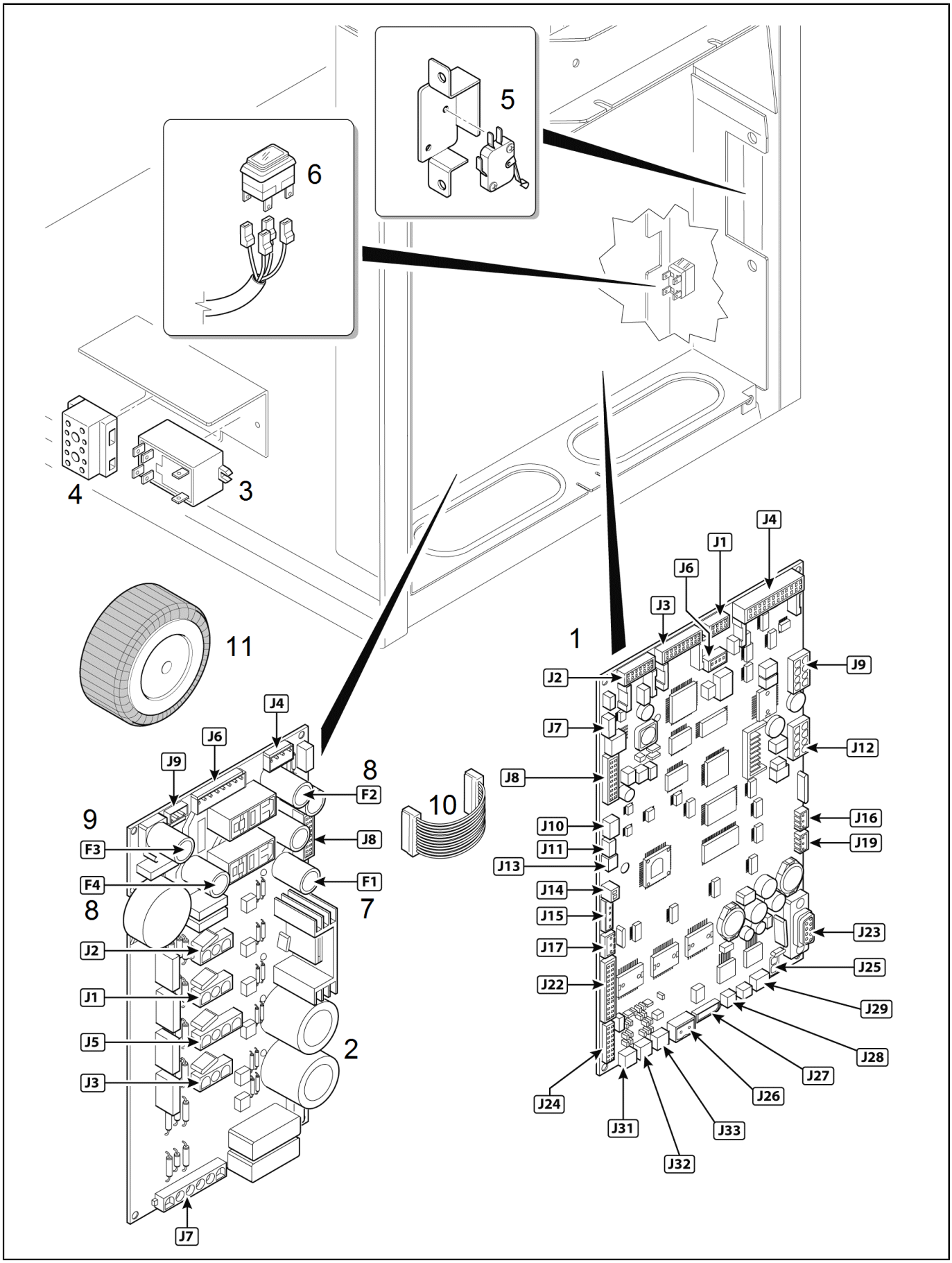
5
6
4
3
11
1
J4
J1
J6
J3
J9
J2
J7
J12
J8
J16
J10
J19
J11
J13
J14
J15
J23
J17
J25
J22
J29
J28
J27
J26
J24
J31
J33
J32
J4
J6
J9
8
F2
9
F3
J8
10
F4
F1
8
7
J2
J1
J5
2
J3
J7

Pos.	Code	Description	Notes
1	10701056	Kit Cpu Board Egro One Nms	
2	10705962	Power Supply Egro One	
3	34200289	Heating Element Relay	
4	00053952	Connecting Terminal 3 P	
	34300073	Cavo H07Rn-F 5C.Sez.2,5 L=2000	
	34300075	Cavo H07Rn-F 3Capi Sez.4 L=2500	
	34300079	Cavo H07Rn-F 5C.Sez.4 L=2500	
5	34100021	Micro Switch	
6	34030077	Main Switch	
7	00003285	Fuset8A 250V 5X20Mm	
8	34200177	Fuse 2A 5X20	
9	00003280	Fuse F6,3A 250V 5X20Mm	
10	10110701	Cable Powersupply-Cpu One	
11	34200269	Transformer 140Va	

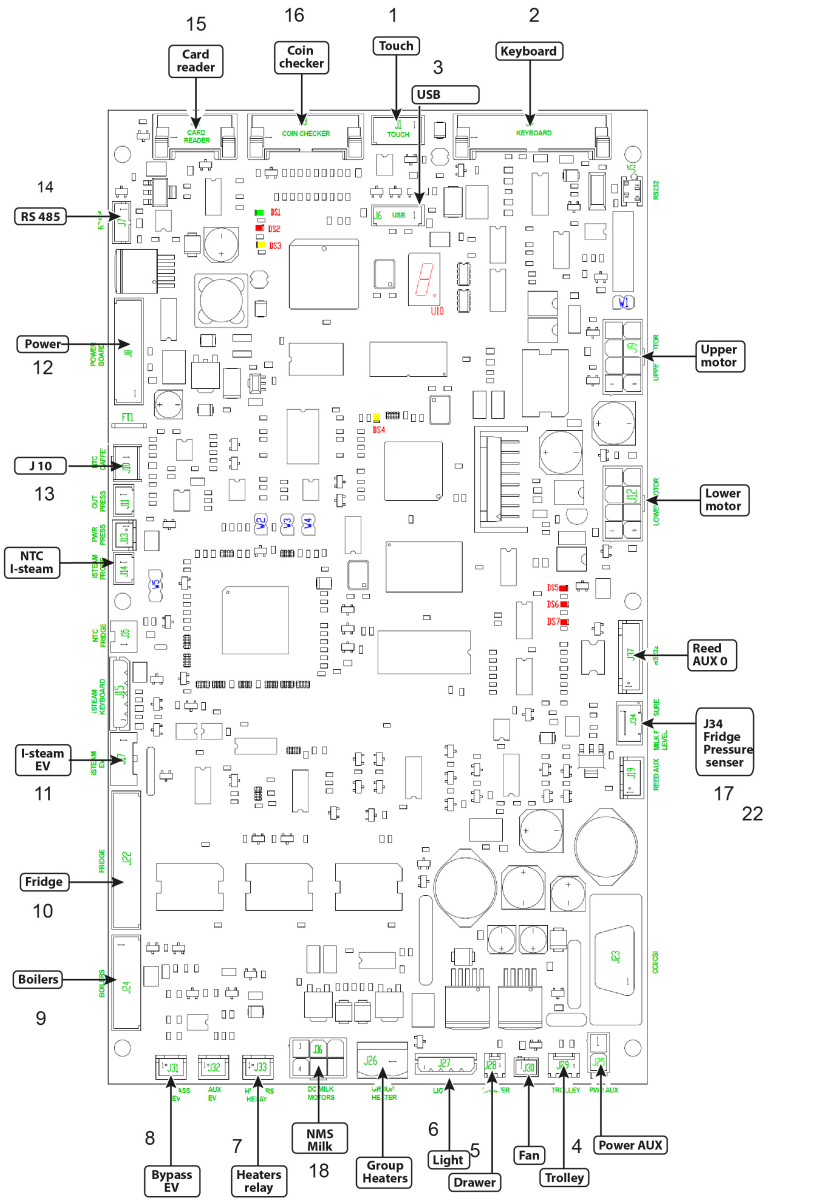
15
Card reader
16
Coin checker
1
Touch
2
Keyboard
3
USB
14
RS 485
Power
12
J 10
13
NTC I-steam
I-steam EV
11
Fridge
10
Boilers
9
Upper motor
Lower motor
Reed AUX 0
J34 Fridge Pressure senser
17
22
8
Bypass EV
7
Heaters relay
NMS Milk
18
Group Heaters
6
Light
5
Drawer
Fan
4
Trolley
Power AUX

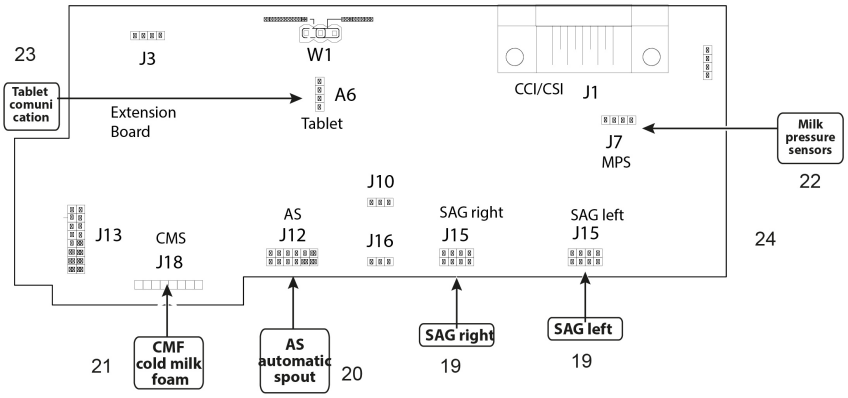
23
Tablet comunication
J3
Extension Board
W1
A6
Tablet
CCI/CSI
J1
J7
MPS
Milk pressure sensors
22
J10
J13
CMS
J18
AS
J12
J16
SAG right
J15
SAG left
J15
24
21
CMF cold milk foam
AS automatic spout
20
SAG right
19
SAG left
19

Pos.	Code	Description	Notes
1	10110705	Wiring Set Touchscreen One	
2	00044846	Flat Cable 600Mm	
3	10110706	Extension Usb-Cable	
	34070075	Wiring Set J6 With Usb Connector (Touch Pad)	
4	10110714	Wiring Set J29	
5	10110717	Wiring Set J28	
6	10705592	Usb Wired Assy One	
7	10110716	Wiring Set J33 Relays	
8	10110704	Wiring Set J31 By Pass One	
	10110867	Wiring Valves Sirai	
9	10110867	Wiring Valves Sirai	
10	10110709	Wiring Set J22 Ks7	
	10110715	Wiring Set J22 One Quick Milk	
	10110759	Wiring Milk Pump Module Ks9	
	10110821	Wiring Set J22 One Quick Milk Nms	
	10701324	Extension Kit - Undercounter Fridge	
11	10110703	Wiring Set J17 Isteam	
	10110874	Wiring Electovalve Isteam 3Valves Cc	
12	10110712	WIRING SET J10 EXTENSION WIRING COFFEE PROBE ONE	
13	10110701	Cable Powersupply-Cpu One	
14	10110728	Wiring Powder Module - Coffee Machine	
15	10110001	Flat Cable Pay System Machine 16 Poles	
	10110002	Flat Cable Smart Card 10 Poles	
16	00034550	Cable Tie 2,5 X 200 Mm	
	34200071	Fixing Cable Clamp	
	34200301	CLAMP L.155X4,8MM	
17	10110835	Pressure Sensor Cable Set Nms 1Milk	
	10110837	Extension Cable Pressure Sensor 4Pole	
	10110839	Pressure Sensor Cable Set 2Milk	
	10110976	Cable Milk Sensor Nms	Kabel Drucksensor von Maschine / cable pressure sensor from machine
19	10110962	Wiring Sag	
20	10110961	Wiring As	
21	10110959	Wiring Valve Pump Module Cmf Ks9	
	10110960	Wiring Cmf Valves	
22	10110835	Pressure Sensor Cable Set Nms 1Milk	
	10110837	Extension Cable Pressure Sensor 4Pole	
23	10110958	Wiring Tablet Byo Fix	
24	34070236	Cable Button Display Byo	

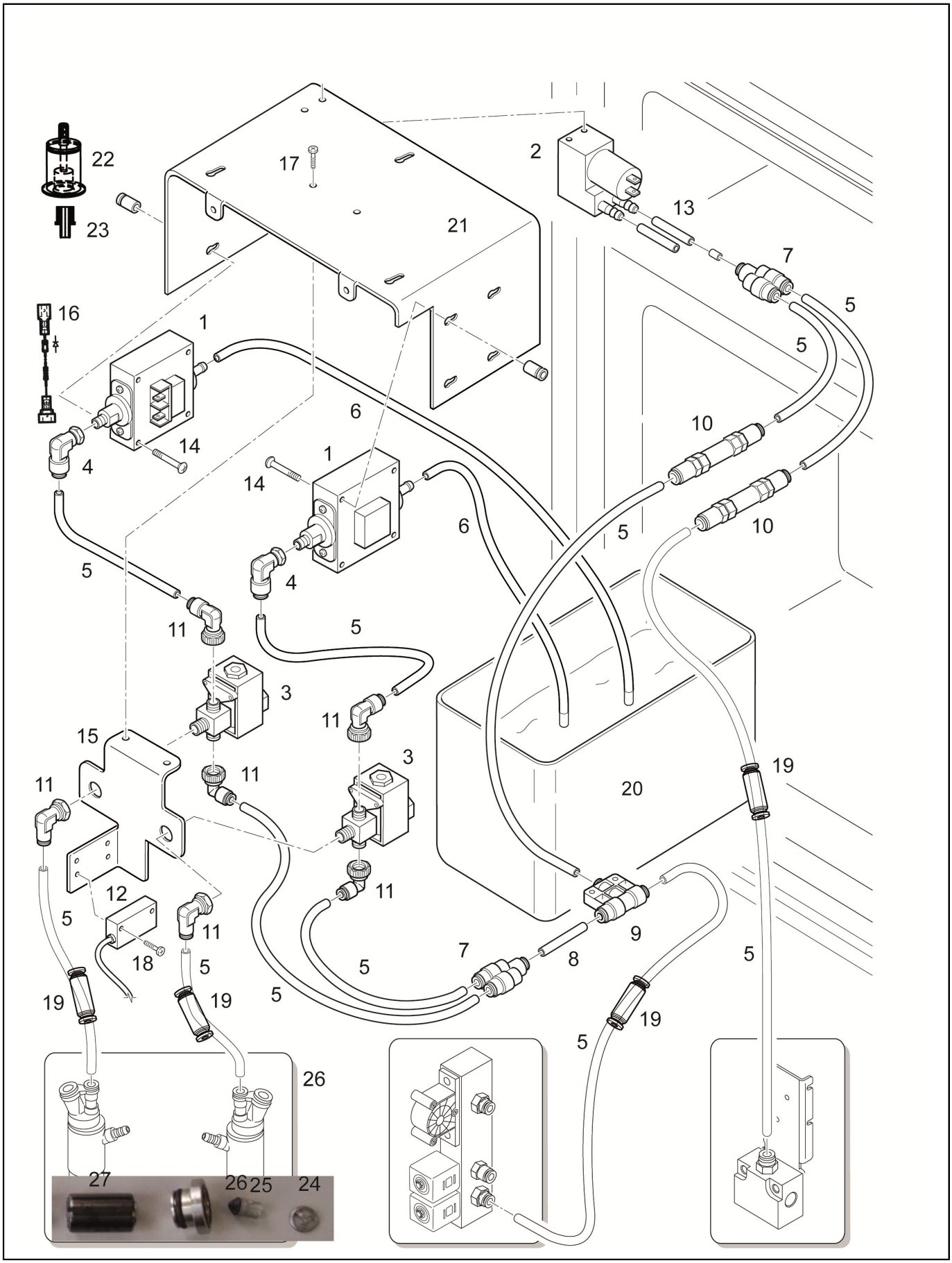
22
23
17
2
13
21
7
5
16
1
5
6
10
14
4
1
14
6
5
10
5
4
11
5
3
11
15
3
11
11
20
19
12
11
5
9
18
5
7
8
5
19
19
5
19
5
26
27
26
25
24

Pos.	Code	Description	Notes
1	34011032	Milk Pump (Gotec Etsg 21) 230 V/50-60 Hz Standard	
	34011033	Milk Pump 230 V/50-60 Hz High Flow	
2	00048543	Washer M4 Inox	
	00100743.001	Air Pump	
	00100771.408	CROSSED RAISED CHEESE HEAD SCREW L = 8MM	
3	00059209	Valve 3/2 24V 8W	
4	00059249	Threaded Elbow, Male D. 4 X G1/8	
5	38228072	Teflon Hose Fep D. 4,0 X 2,5	
6	00049209	Silicon Hose D. 7,0 X 3,0 Mm	
7	00054344	Y-Connection D. 4 Mm	
8	00055974	Double Plug-In Nipple D. 4 Mm	
9	00054346	T - Connector D. 4 Mm	
10	00053943	Coupling Unit (Check Valve)	
11	00060076	PLUG IN ELBOW CONNECTOR 6X4	
12	34070167	Ultrasonic Sensor Fridge	
13	00050010.001	Silicon Hose D. 6,0 X 3,0 Mm	
14	00055594	Raised Cheese Head Screw M3 X 25 Mm	
15	00100428.001	Fixing Bracket	
16	00054678	Diode Kompl. To Gotec Milk Pump	
17	00001069	Screw Tcb Cross Ph Inox M4X6	
18	00001439	6-Edge Nut M3 X 0,8 Mm	
19	00054996	COUPLING UNIT D. 4 MM	
20	00059212	Milk Container 6.5L	
21	00100452.001		
	00101044.001	Milk Pump Unit Ks 7 1 Pump Standard	
	00101045.001	Milk Pump Unit Ks7 2 Pump 230V 50/60Hz Low Flow	
	00101046.002	MILK PUMP UNIT KS 7 60 HZ (7-11) HIGH FLOW 2PUMPS	
	10705815	1 MILK PUMP MODULE KS7 230V 50/60HZ HIGH FLOW	
	10705816	MOD.2 PUMPS MILK KS7 230V 50/60HZ HIGH FLOW	
22	00100427.001	Tube Cupling	
23	00043884	Clutch Nipple	
	00100038.001	O-Ring 8,73 X 1,78 Mvq	
24	69150007	Spring Stop Milk Pump	
25	69150006	Plunger Check Valve Milk Pump	
26	69150005	Spring Check Valve Milk Pump	
27	69150008	Piston Milk Pump	

Pos.	Code	Description	Notes
1	10701017	Milk Pump Unit 2Milk 2 Machine Ks9-Nms	
2	10701014	Milk Pump Unit 1Milk 1Machine (Ks9/Nms)	
3	10701016	Milk Pump Unit 2Milks 1Machine (Ks9/Nms)	
4	10701015	Milk Pump Unit 1Milk 2Machines (Ks9/Nms)	
5	10705773	Pump Module Nms Ks7 Ultrasonic	
6	10705774	Pump Module Nms Ks7 1Milk-2Mac Pressure Sensor	
7	69200115	Y CONNECTION D 4	
8	69200126	T Fast Connector D.4	
9	69200114	Check valve D 4	
10	10701012	Milk Pump Gear 24V	
11	69200116	Valve 2/2 24V Ks9	
12	00048474	Silicon Hose D. 7 X 4 Mm	
13	23000196	Sucking Nozzle	
14	00043884	Clutch Nipple	
	00100038.001	O-Ring 8,73 X 1,78 Mvq	
15	10701011	Milk Inlet Pipe Assy.	
16	37552800		
17	37228072		
18	10701030	EXTERNAL MILK PUMP MODULE 1MILK 1MACHINE NMS SMPU	
	10701031	EXTERNAL MILK PUMP MODULE 2MILK 1MACHINE NMS SMPU	
	10701032	EXTERNAL MILK PUMP MODULE 1MILK 2MACHINE NMS SMPU	
	10701033	EXTERNAL MILK PUMP MODULE 2MILK-2MACHINE NMS SMPU	
19	32331757	Chassis Milk Pump Module External	
	32331758	External Milk Pump Cover	

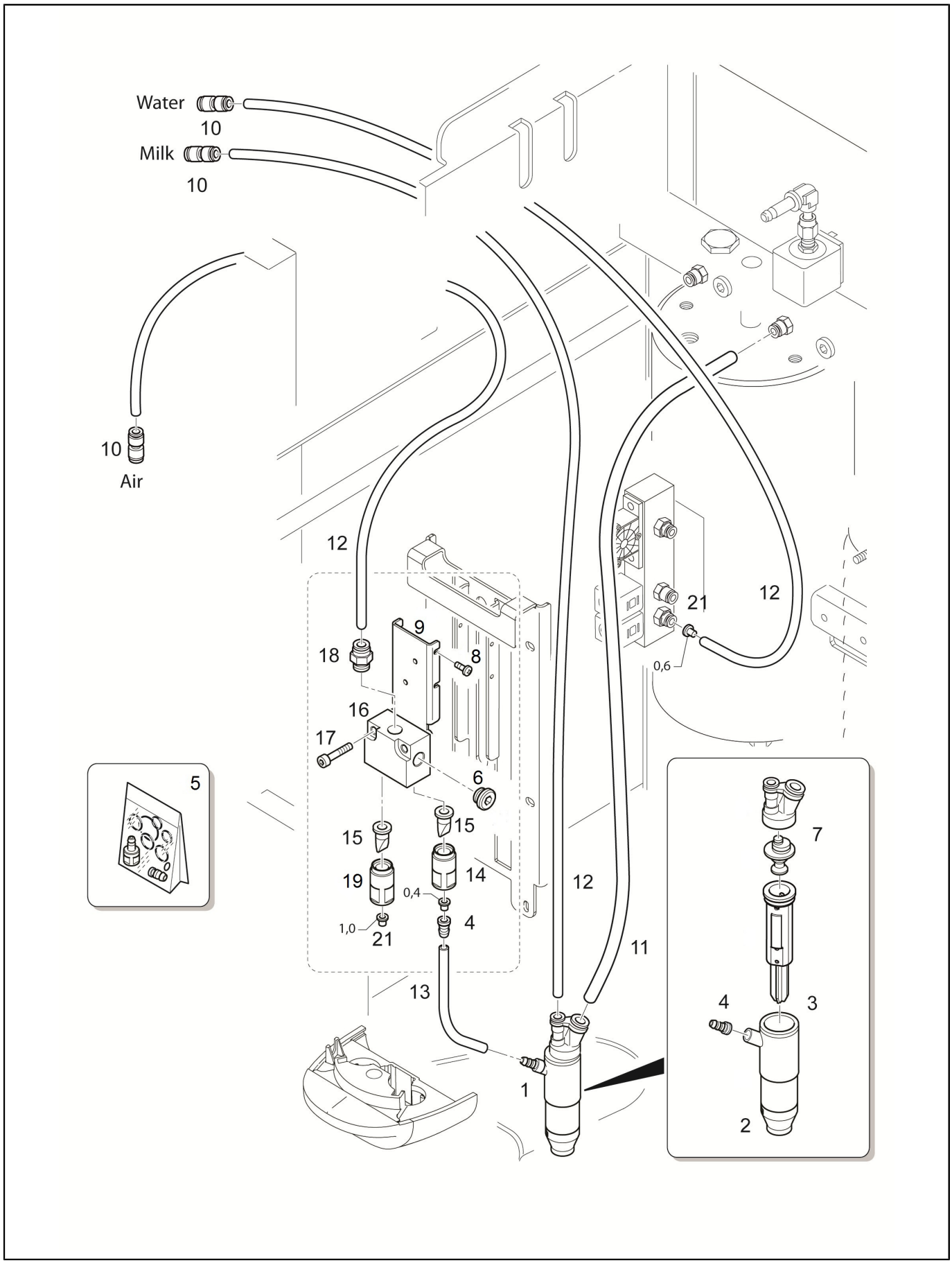
Water
10
Milk
10
10
Air
12
9
18
8
16
17
6
5
15
15
19
14
0,4
1,0
21
4
13
12
11
1
21
12
0,6
7
4
3
2

Pos.	Code	Description	Notes
1	00100775.003	Mixer Kit	
2	00100027.002	Mixer Cap	
3	10700226	Lower Part Foamer Head	
4	00100063.001	Connector Aire	
5	00056916	O-Ring Seal Set To Foaming Head	
6	69200132	Cap G1/8 Aisi 316	
7	10700939	Mixer Kit Egro	
8	37030309	Screw M 3 X 6 Tfl Ph	
9	32331406	Bracket Valve Air Coffee Outlet	
10	69200148	Straight Connector 4 X 4 Ppsu	
11	38228073	Teflon Hose Fep D. 6 X 4	
12	38228072	Teflon Hose Fep D. 4,0 X 2,5	
13	00050010.001	Silicon Hose D. 6,0 X 3,0 Mm	
	10700952	Kit Air Pipe For Foamer Head	
14	38120106	Valve Insert Duckbill	
15	36230017	Duckbill Valve	
16	10705808	DUCKBILL VALVE BLOCK	
	38120105	Electrovalve Air	
17	00000930	Screw M4X20	
18	69200134	Straight Connector G1/8 X 4	
19	38120111	Duckbill Block Reduction Block One	
21	38120127	Restriction Ring Little White	

Pos.	Code	Description	Notes
1	10701101	RETROFIT KIT ONE XP NMS	
	10701142	Qm Nms Outlet Slider One/Zero Assy.	
	10701143	Tm Xp Nms Outlet Slider Assy.	
	10701144	RETROFIT KIT ONE QM NMS	
2	10701022	Air Injector	
3	10701019	Central Injector/14	
4	10701020	Coffee Injector	
5	10701023	Steam Injector Qm	
6	10701018	Injector Nms	
7	10701021	Milk Injector Quick Milk/14	
8	00030511	Screw	
9	38120210	Upper Spout Nms	
10	38120209	Lower Spout Nms D5.5	
	38120277	Coffee Outlet Lower Part D.6,3	
11	38120211	Handle Brewing Outlet	
12	10701022	Air Injector	
13	10701024	Steam Injector Tm/Qmpro	
14	10701018	Injector Nms	
15	38120150	Chocolate Pipe Connector	
16	36990067	Powder Module Connection In Spout	
17	32331775	Bracket Powder Outlet	
18	37510400	Snap Ring D. 4	
19	38120216	Upper Powder Pipe	
20	38120215	Lower Powder Pipe	
21	37900105	INOX BALL DIAM. 1/4	
22	39110062	At Ball Spring	
23	10905117	Cover	
24	00100043.001	O-Ring 6,75 X 1,78 Mvq	
25	00100038.001	O-Ring 8,73 X 1,78 Mvq	
26	00001951	Snap Ring D. 6 Inox	
27	00001951	Snap Ring D. 6 Inox	
28	38228072	Teflon Hose Fep D. 4,0 X 2,5	
29	00060162	Silicon Hose Blue (Kb) 50Shore D. 7,0 X 4,0 Mm	
30	00050010.001	Silicon Hose D. 6,0 X 3,0 Mm	
31	38228005	Silicon Tube D.6X4	
32	10701028	Air Pump Assy. Quick Milk Nms	
	10701029	Air Pump Assy. Top Milk Nms	
	34011035		
33	00055794	Wire Hose Clamp 159 Mm	
	69200127	Y Connection D 4 Silicon Pipe	
	69200128	T Fast Connector With Check Valve	
34	00001062	Raised Cheese Head Screw M3 X 6 Mm	
	00048543	Washer M4 Inox	
	00100771.408	CROSSED RAISED CHEESE HEAD SCREW L = 8MM	
	32331786	Air Pump Bracket	
	37420300	Elastic Washer 3 X 0,8	
35	34040158	Valve 3/2 24V 5.5W	
36	23000277	Flow Limiter D. 3Mm Connection M5 X 6	
	36404056	O-Ring 3,68X1,78 Epdm 70Sh Nsf Teflon 2015	
37	69200139	Elbow Connector 4 X G1/8 Ppsu	
38	00054938	Threaded Male Nipple With Washerg 1/8 And Gasket	
39	32331778	Pinch Valve Bracket Nms	
	34040123	Pinch Valve Small 5.5Mm	
40	37020408	Screw M4 X 8 Tsp Inox	

Pos.	Code	Description	Notes
	37420401	Elastic Washer Diam.4	
	69200067	Screw M4X5 Inox	

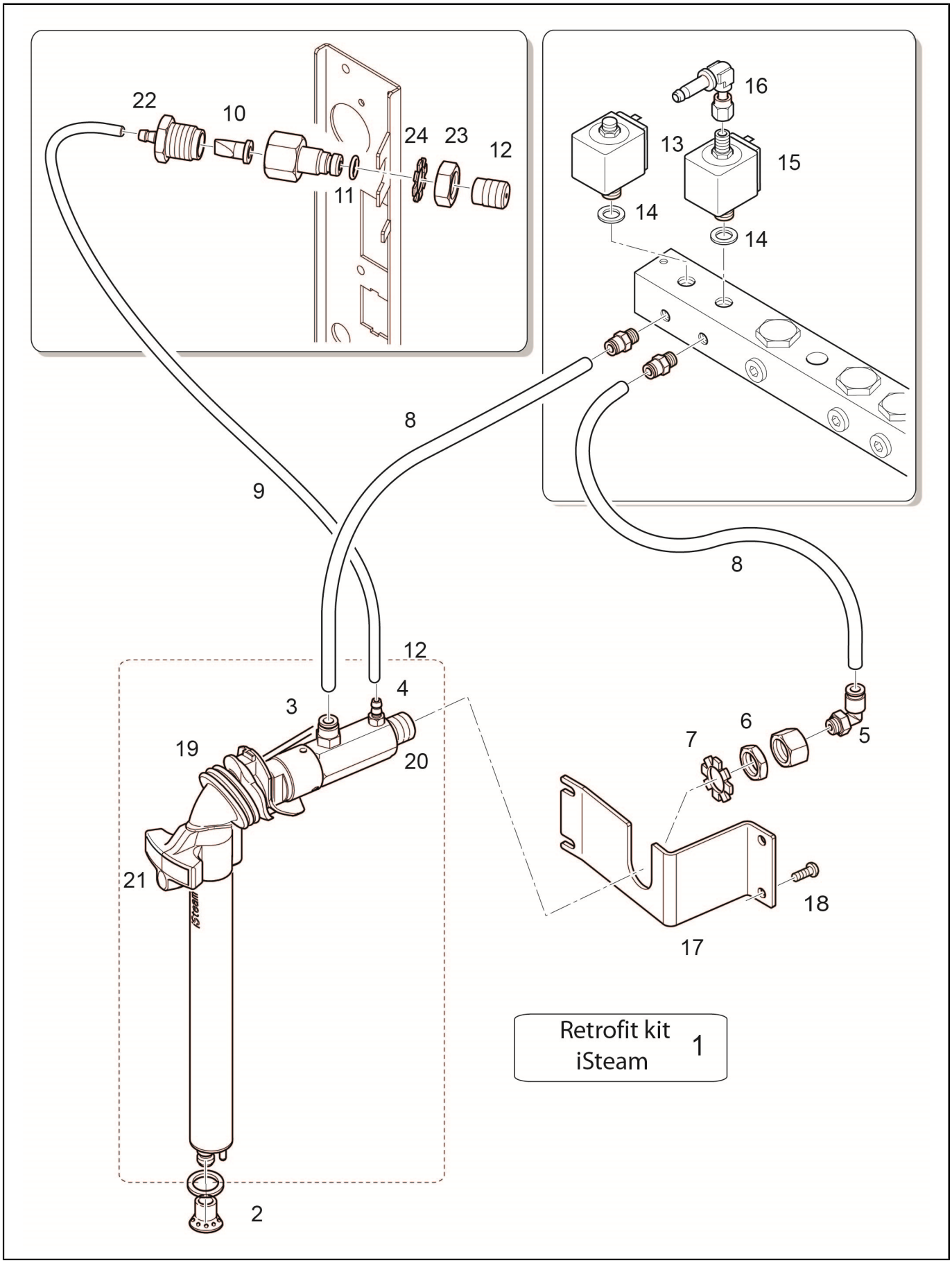
22
10
24
23
12
11
16
13
15
14
14
8
9
8
12
4
3
19
20
7
6
5
21
18
17
2
Retrofit kit
iSteam
1

Pos.	Code	Description	Notes
1	10701627	Retrofit Kit Isteam One/19	
	10705590	Isteam Assay.	250mm
2	23000098V	Isteam Sprayer	
	36404022	O-RING 6,4 X 1,9 R5A	
3	69200135	Straight Connector G1/8 X 6	
4	23000100	Gasket-Holder Venturi Isteam	
5	69200140	Elbow Connector6 X G1/8 Ppsu	
6	26220005	Flat Nut 3/8	
7	37431600	Outer Toothed Washer D16	
8	38228073	Teflon Hose Fep D. 6 X 4	
9	00050010.001	Silicon Hose D. 6,0 X 3,0 Mm	
10	10701437	Air Inlet Valve Isteam/17	
	36230017	Duckbill Valve	
	36230021	Duckbill Valve	Replacement for 36230017 / Ersatz für 36230017
11	10701437	Air Inlet Valve Isteam/17	
	36404013	O-Ring Silicone 2031	
12	23000092	Flow Limiter 0,25 Isteam/Yousteam	
	23000093	Flow Limiter 0,35 Isteam/Yousteam	
	23000192	Flow Limiter 0,15 Isteam	
13	00100559.001	Operator Kit 2/2 Way Water T30 (Acl)	
	00100560.001	Plunger 2/2 Water T30 (Acl)	
14	00100013.001	O-Ring 17,17 X 1,78 F	
15	00100016.005	Plunger 3/2 Steam T30 (Acl)	
	00100116.005	Operator Kit 3/2 Ways Steam (Acl) T30	
16	00057912	Threaded Elbow, Maled. 6 Mm X G1/8	
17	32331413	Bracket	
18	37040410	Screw M 4 X 10	
19	36990024	Collar Isteam	
20	36404054	O-Ring 12,42 X 1,78 V 70Sh 2050	
21	10701363	Isteam Keypad/16	
22	36990058	RUBBER HOLDER AIR ISTEAM	
23	37321201	Nut M12	
24	37431200	Toothed Washer D. 12,5	

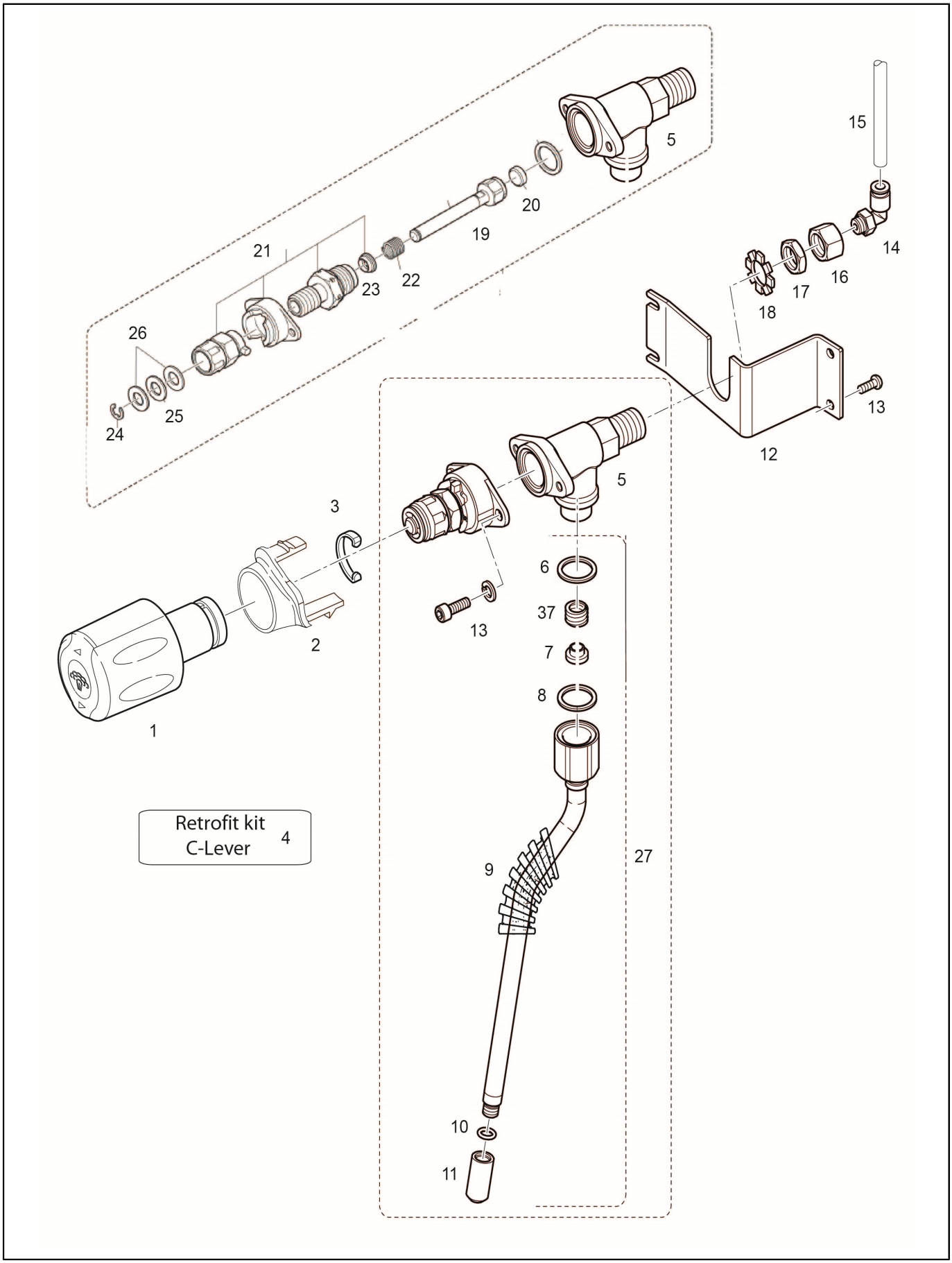
5
15
20
19
21
14
16
17
22
23
18
26
13
25
24
12
5
3
6
37
13
2
7
8
1
Retrofit kit
C-Lever
4
27
9
10
11

Pos.	Code	Description	Notes
1	10060189	Steam Tap/16	
2	38120087	Cover	
	38120088	Cover Steam Handel	
3	32210001	Steam Handle Spring	
4	00100998.001	Retrofit Kit C-Lever	
	10701326	Retrofit Kit C-Lever Cool Touch	
5	10060155	Fast Steam Tap Left No Connector	
6	36220009	Gasket Nut Note Teflon	
7	36930016	Gasket Teflon Connection Steam Wand	
8	36930017	Teflon Gasket For Steam Wand Nut	
9	10049112	Steam Pipe Inox Lg 25	
	10049121	Cool Touch Wand Classe 7	
	10701426	Cooltouch Wand/17	
	36990004	Rubber For Steam Pipes	
10	36404022	O-RING 6,4 X 1,9 R5A	
11	23212035	Steam Sprayer Lg44 D1.5	
	25111006	Steam Nozzle	
12	32331413	Bracket	
13	37040510	Screwm5 X 10Mm	
14	69200140	Elbow Connector6 X G1/8 Ppsu	
15	38228073	Teflon Hose Fep D. 6 X 4	
16	00100855.001	Sleeve	
17	26220005	Flat Nut 3/8	
18	37431600	Outer Toothed Washer D16	
19	10060002	Rod+Nut And Steam Cock Gasket	
20	36301105	Gasket For Nut Steam Tap Epdm	
21	10701240	Kit Clever/15 Cams Peek Left	
22	39110035	Water-Steam Cock Spring	
23	36990078	Shaft Gasket Fast Tap	
24	37510700	Snap Ring D. 7	
25	36230001	Teflon Washer	
26	32239044	New Steam Cock Washer	
27	10706035	Steam Pipe+Junction One	
28	39110038	Spring Connection Steam Tap	

Alphanumeric index

Code	No. table	Pos.
	2015	12
	2015	25
00000928	2002	21
00000928	2002_02	21
00000930	2002_02	12
00000930	6002	17
00000935	2002	13
00000935	2002_02	40
00001062	6003_02	34
00001069	6000	17
00001176	2002	4
00001176	2002_02	4
00001439	6000	18
00001484	2006	26
00001484	2008	26
00001518	2002	24
00001518	2002	26
00001518	2015	17
00001521	2000	17
00001521	2000_02	9
00001521	2002_02	24
00001522	2007	5
00001522	2007_02	5
00001522	2016	4
00001951	6003_02	26
00001951	6003_02	27
00002195	2000	40
00002195	2000_02	26
00002207	2000	40
00002207	2015	19
00002240	1000	17
00002240	2000	10
00002240	2006	6
00003280	3000	9
00003285	3000	7
00004473	2000	31
00004473	2000	32
00004473	2001_02	3
00004473	2011	3
00004473	2015	23
00004474	2000_02	21
00004474	2001_02	2
00004474	2011	8
00004475	2000	30
00004475	2000_02	24
00004475	2001_02	4
00004475	2011	2
0000930	2002	12
00009917	2006	11
00009917	2015	16
00009917	2015	7
00009934	2006	30
00010152	2006	21
00010212	2016	11
00019974	2006	21
00019974	2007	31
00019974	2007_02	31
00019974	2008	21
00019974	2016	5
00027170	2006	21
00027170	2008	21
00030511	6003_02	8
00034550	3001	16
00039064	2002	8
00039064	2002_02	8
00039067	2006	21
00039067	2008	21

Code	No. table	Pos.
00042324	2007	3
00042324	2007_02	3
00042324	2016	3
00043884	6000	23
00043884	6000_02	14
00044464	2000	22
00044464	2006	20
00044464	2008	20
00044846	3001	2
00045032	2002	18
00045032	2002_02	18
00045393	2007	2
00045393	2007_02	2
00045393	2016	2
00045682	2006	21
00045682	2008	21
00045714	2000	33
00045714	2000_02	23
00045714	2001_02	10
00045714	2001_02	5
00045714	2011	10
00046069	1000	16
00046069	1000	18
00046192	2007	25
00046192	2007_02	25
00046192	2016	25
00046299	2007	2
00046299	2016	2
00046806	2000	34
00046806	2011	5
00046844	1000	9
00046844	2002	28
00046844	2002_02	28
00046933	2005	20
00047077	1001	24
00047078	1001	24
00047934	2000	40
00047934	2000_02	26
00048474	2011	4
00048474	6000_02	12
00048543	6000	2
00048543	6003_02	34
00048548	2002_02	13
00048550	2002	23
00048550	2002_02	23
00048560	2016	9
00048747	2002	30
00048747	2002_02	30
00049209	6000	6
00049966	2008	40
00050010.001	4000	9
00050010.001	6000	13
00050010.001	6002	13
00050010.001	6003_02	30
00050095	2000	36
00050095	2000	40
00050095	2000_02	27
00050095	2015	26
00050096	2000	40
00050096	2015	19
00052557	2000_02	22
00053558	2007	26
00053558	2007_02	26
00053558	2016	26
00053559	2002	34
00053560	2002	35
00053602	2002	32

Code	No. table	Pos.
00053752	2006	28
00053752	2016	16
00053753	2015	13
00053753	2016	17
00053754	2007_02	36
00053785	2000	12
00053943	6000	10
00053952	3000	4
00054063	2006	2
00054064	2000_02	12
00054064	2015	15
00054067	2000	14
00054067	2015	14
00054080	2002	26
00054087	2002	25
00054107	2000	11
00054220	2002	31
00054344	6000	7
00054346	6000	9
00054348	2016	6
00054429	2000	2
00054430	2000	35
00054433	2002	20
00054647	2000	40
00054647	2015	19
00054649	1000	15
00054678	6000	16
00054861	2002	6
00054861	2002_02	6
00054920	2000	11
00054923	2000	9
00054938	6003_02	38
00054940	2002	26
00054944	1001	23
00054996	6000	19
00055294	2007	27
00055294	2007_02	27
00055294	2016	27
00055557	1000	15
00055594	6000	14
00055794	2000	5
00055794	2000_02	8
00055794	6003_02	33
00055795	2001_02	6
00055795	2011	6
00055941	2000	4
00055941	2015	5
00055974	6000	8
00056751	2006	29
00056751	2008	29
00056916	6002	5
00057101	2002	33
00057446	2002	41
00057446	2002_02	41
00057567	2000	15
00057912	2006	24
00057912	2008	24
00057912	4000	16
00058107	2016	8
00058108	2016	7
00058587	2007	10
00058587	2007_02	10
00058587	2016	10
00058836	2000	26
00059209	6000	3
00059212	6000	20
00059249	6000	4

Alphanumeric index

Code	No. table	Pos.
00060076	2007_02	41
00060076	6000	11
00060116	2002	5
00060116	2002_02	5
00060160	2006	22
00060160	2008	22
00060162	6003_02	29
00060233	2016	31
00060283	2002	17
00060283	2002_02	17
00060858	2002	27
00060858	2002_02	27
00100013.001	2006	27
00100013.001	2008	27
00100013.001	4000	14
00100016.005	2006	23
00100016.005	2008	23
00100016.005	4000	15
00100027.002	6002	2
00100038.001	6000	23
00100038.001	6000_02	14
00100038.001	6003_02	25
00100043.001	6003_02	24
00100059.001	2000	21
00100059.001	2006	17
00100059.001	2008	17
00100063.001	6002	4
00100105.001	2000	23
00100116.005	2006	23
00100116.005	2008	23
00100116.005	4000	15
00100136.001	2002	7
00100136.001	2002_02	7
00100147.001	2000	8
00100147.001	2000_02	3
00100147.001	2007_02	21
00100147.001	2015	8
00100149.001	2000	8
00100149.001	2000_02	3
00100149.001	2007_02	21
00100149.001	2015	8
00100167.001	2015	4
00100232.001	2006	31
00100233.001	2016	18
00100236.001	2006	18
00100236.001	2008	18
00100243.002	2015	24
00100267.001	2006	7
00100268.002	2006	8
00100268.002	2008	8
00100294.001	2016	24
00100294.002	2016	24
00100300.001	2006	12
00100300.001	2008	12
00100313.001	2007	24
00100313.001	2007_02	24
00100313.001	2016	24
00100313.002	2016	24
00100351.001	2006	5
00100351.001	2008	5
00100367.001	2007	2
00100367.001	2016	2
00100427.001	6000	22
00100428.001	6000	15
00100452.001	6000	21
00100506.001	2002	9
00100506.001	2002_02	9

Code	No. table	Pos.
00100510.001	2002	2
00100514.001	2002	3
00100523.001	2002	14
00100558.001	2015	27
00100559.001	2000	35
00100559.001	4000	13
00100560.001	2000	35
00100560.001	4000	13
00100565.001	2005	16
00100743.001	6000	2
00100771.408	6000	2
00100771.408	6003_02	34
00100775.003	6002	1
00100793.001	2006	9
00100793.001	2008	9
00100793.001	2016	29
00100802.001	2006	1
00100804.001	2000	1
00100825.001	2006	34
00100825.001	2008	34
00100855.001	2004	9
00100855.001	4001	16
00100862.003	2000	31
00100862.003	2001_02	11
00100862.003	2011	11
00100867.001	2007_02	34
00100867.001	2016	33
00100868.001	2007_02	35
00100868.001	2016	34
00100869.001	2006	15
00100869.001	2008	15
00100877.001	2005	2
00100877.002	2005	2
00100878.001	2005	1
00100878.002	2005	1
00100897.001	2007	15
00100897.001	2007_02	15
00100897.001	2016	15
00100899.001	2007	19
00100899.001	2007_02	19
00100899.001	2016	19
00100939.001	2007	20
00100939.001	2007_02	20
00100939.001	2016	20
00100986.001	1000	20
00100987.001	1000	20
00100994.001	1001	18
00100996.001	1000	21
00100997.001	1000	19
00100998.001	4001	4
00101000.001	2005	19
00101001.001	2000	38
00101044.001	6000	21
00101045.001	6000	21
00101046.002	6000	21
00101048.001	2005	14
00101070.001	2005	17
10020001	2015	1
10020002	2015	1
10020018	2008	1
10020038	2000_02	1
10020056	2008	1
10042099	2000_02	18
10042099	2015	20
10042199	2000_02	4
10046044	2015	11
10046062	2000_02	28

Code	No. table	Pos.
10049014	2004	5
10049112	4001	9
10049121	4001	9
10054001	2002	37
10054002	2002_02	37
10060002	4001	19
10060006	2000_02	17
10060058	2006	20
10060060	2008	20
10060155	4001	5
10060189	1001	6
10060189	4001	1
10060479	2000_02	17
10060605	2000	18
10060605	2015	18
10060606	2000_02	29
10060606	2015	27
10060607	2000_02	3
10060607	2007_02	21
10060607	2015	8
10110001	3001	15
10110002	3001	15
10110008	2008	39
10110389	2015	2
10110701	3000	10
10110701	3001	13
10110703	3001	11
10110704	2000	37
10110704	2000_02	30
10110704	2015	30
10110704	3001	8
10110705	3001	1
10110706	3001	3
10110709	3001	10
10110712	3001	12
10110714	3001	4
10110715	3001	10
10110716	3001	7
10110717	3001	5
10110728	3001	14
10110729	2000	25
10110729	2015	24
10110759	3001	10
10110821	3001	10
10110835	3001	17
10110835	3001	22
10110837	3001	17
10110837	3001	22
10110839	3001	17
10110867	3001	8
10110867	3001	9
10110874	3001	11
10110958	3001	23
10110959	3001	21
10110960	3001	21
10110961	3001	20
10110962	3001	19
10110976	3001	17
10120004	2008	14
10700101	2000	27
10700176	2002_02	3
10700177	2002_02	2
10700178	2002_02	33
10700226	6002	3
10700232	2000_02	13
10700232	2001_02	7
10700232	2011	7

Alphanumeric index

Code	No. table	Pos.
10700268	2000	24
10700270	2006	3
10700281	2001_02	9
10700939	6002	7
10700952	6002	13
10700989	1001	1
10700997	1000	25
10700998	2006	4
10700998	2008	38
10701011	6000_02	15
10701012	6000_02	10
10701014	6000_02	2
10701015	6000_02	4
10701016	6000_02	3
10701017	6000_02	1
10701018	6003_02	14
10701018	6003_02	6
10701019	6003_02	3
10701020	6003_02	4
10701021	6003_02	7
10701022	6003_02	12
10701022	6003_02	2
10701023	6003_02	5
10701024	6003_02	13
10701028	6003_02	32
10701029	6003_02	32
10701030	6000_02	18
10701031	6000_02	18
10701032	6000_02	18
10701033	6000_02	18
10701036	2002_02	36
10701049	2002	36
10701050	2002	11
10701050	2002_02	11
10701051	2002_02	1
10701056	3000	1
10701094	2000_02	1
10701101	1001	18
10701101	6003_02	1
10701142	6003_02	1
10701143	6003_02	1
10701144	1001	18
10701144	6003_02	1
10701148	2000_02	31
10701209	2005	12
10701210	2005	12
10701240	4001	21
10701254	2008	3
10701274	1001	25
10701275	1001	25
10701276	1001	25
10701324	3001	10
10701326	4001	4
10701363	4000	21
10701413	1000	15
10701426	4001	9
10701437	4000	10
10701437	4000	11
10701527	1000	27
10701542	2008	3
10701627	4000	1
10701642	2000	24
10701642	2000_02	11
10701659	1001	2
10701799	1000	5
10702045	2008	1
10705175	2000	27

Code	No. table	Pos.
10705179	2000	20
10705185	2000	20
10705232	2006	16
10705232	2008	16
10705233	2006	19
10705233	2008	19
10705245	2004	1
10705528	1000	7
10705529	1000	8
10705529	2005	7
10705590	4000	1
10705592	1001	17
10705592	3001	6
10705706	2005	18
10705707	1000	6
10705708	1000	6
10705710	1001	8
10705713	2005	15
10705714	2005	15
10705715	2005	12
10705716	2005	12
10705717	1000	5
10705717	2005	18
10705718	2002	29
10705756	2007_02	33
10705759	2007	33
10705773	6000_02	5
10705774	6000_02	6
10705801	1000	16
10705802	2015	28
10705808	6002	16
10705809	2000	28
10705815	6000	21
10705816	6000	21
10705930	2016	30
10705962	3000	2
10705964	1001	2
10705966	1000	1
10705966	1000	3
10705968	1000	1
10705979	1000	3
10706035	4001	27
10781311	1000	15
10905117	1001	20
10905117	6003_02	23
10905122	1001	20
20200113	2004	14
21000010A	1001	11
21000010B	1001	11
23000092	4000	12
23000093	4000	12
23000098V	4000	2
23000100	4000	4
23000128	2005	22
23000135	2000	29
23000135	2000_02	25
23000135	2015	29
23000136	1000	21
23000144	2004	6
23000151	2015	6
23000192	4000	12
23000194	2006	37
23000194	2008	37
23000196	6000_02	13
23000277	6003_02	36
23000288	2007	11
23000288	2007_02	11

Code	No. table	Pos.
23000299	2000_02	32
23000299	2008	30
23000322	2000	6
23000322	2000_02	6
23000535	2008	7
230100009	2008	21
23212035	4001	11
24300010	2002_02	32
25111006	4001	11
25128014	2004	6
25128015	2004	6
25135017	2004	13
25135019	2004	5
26220005	2004	8
26220005	4000	6
26220005	4001	17
27350001	2000_02	17
27350014	2000	16
27350014	2000	7
27350014	2000_02	3
27350014	2000_02	32
27350014	2000_02	7
27350014	2008	11
30001047	2006	10
30001047	2008	10
30001048	2002	19
30001048	2002_02	19
320200000	1000	1
320200000	1000	3
320200001	1000	1
320200001	1000	3
32210001	4001	3
32239044	4001	26
32331403	2005	10
32331404	2005	9
32331405	1001	18
32331406	6002	9
32331407	1001	18
32331413	4000	17
32331413	4001	12
32331419	1000	20
32331435	1000	26
32331443	2002_02	20
32331498	2002_02	14
32331698	1000	29
32331757	6000_02	19
32331758	6000_02	19
32331775	6003_02	17
32331778	6003_02	39
32331780	2000_02	10
32331786	6003_02	34
32551057	1000	2
32551057A	1000	2
34010009	2002	1
34010015A	2005	24
34011032	6000	1
34011033	6000	1
34011035	6003_02	32
34020017	2007	3
34020017	2007_02	3
34020017	2016	3
34020034	2005	17
34020125	2002_02	35
34030077	3000	6
34040045	2015	8
34040123	6003_02	39
34040156	2007_02	38

Alphanumeric index

Code	No. table	Pos.
34040158	6003_02	35
34040163	2007_02	28
34040164	2007_02	28
34040167	2007_02	21
34040177	2000_02	29
34040180	2000_02	29
34040183	2000_02	29
34040184	2000_02	3
34049006	2007	28
34049006	2007_02	28
34049006	2016	28
34049007	2007	28
34049007	2007_02	28
34049007	2016	28
34049011	2007	23
34049011	2007_02	23
34049011	2016	23
34049012	2007	22
34049012	2007_02	22
34049012	2016	22
34049013	2007	23
34049013	2007_02	23
34049013	2016	23
34049014	2007	22
34049014	2007_02	22
34049014	2016	22
34070075	1001	17
34070075	3001	3
34070167	6000	12
34070236	3001	24
34100021	3000	5
34160024	2006	13
34160024	2008	13
34200071	2002_02	39
34200071	3001	16
34200177	3000	8
34200269	3000	11
34200288	2006	14
34200288	2008	14
34200289	3000	3
34200294	2000_02	10
34200294	2015	9
34200301	3001	16
34300073	3000	4
34300075	3000	4
34300079	3000	4
35002509	2000_02	19
35002511	2000	27
35002511	2015	22
36130008	2008	20
36201035	2006	4
36201035	2008	4
36220009	2004	2
36220009	2006	20
36220009	2008	20
36220009	4001	6
36230001	4001	25
36230017	4000	10
36230017	6002	15
36230021	4000	10
36301040	2004	4
36301105	4001	20
36322006	2007	4
36322006	2007_02	4
36322006	2016	4
36404013	2008	20
36404013	4000	11

Code	No. table	Pos.
36404022	2004	12
36404022	4000	2
36404022	4001	10
36404039	2008	6
36404053	2006	20
36404053	2008	20
36404054	2006	36
36404054	2008	36
36404054	4000	20
36404056	6003_02	36
36405002	1000	17
36901952	1001	17
36901955	2000	2
36901955	2006	2
36901955	2008	2
36930016	4001	7
36930017	2004	3
36930017	4001	8
36930110	2002	10
36930110	2002_02	10
36930111	2002	22
36930111	2002_02	22
36990004	4001	9
36990024	4000	19
36990025	1000	28
36990025	2005	21
36990026	2005	13
36990058	4000	22
36990067	6003_02	16
36990078	4001	23
37020408	6003_02	40
37030309	1000	12
37030309	6002	8
37030408	2006	13
37030408	2008	13
37040409	2002_02	26
37040409	2002_02	40
37040410	1000	26
37040410	1000	29
37040410	1001	13
37040410	4000	18
37040411	1001	7
37040412	1000	20
37040420	1001	19
37040446	1001	14
37040510	2006	35
37040510	2008	35
37040510	4001	13
37040621	2006	32
37040621	2008	32
37060306	2002_02	38
37113508	2005	11
37155011	2002_02	25
37228072	6000_02	17
37320603	1000	24
37320603	1000	26
37321201	4000	23
37370301	1000	24
37410300	2005	11
37411001	2006	25
37411001	2008	25
37420300	2002	38
37420300	2002_02	38
37420300	6003_02	34
37420401	6003_02	40
37420403	1001	14
37420601	2006	33

Code	No. table	Pos.
37420601	2008	33
37430400	2006	13
37430400	2008	13
37431200	4000	24
37431600	2004	7
37431600	4000	7
37431600	4001	18
37510320	1000	21
37510400	6003_02	18
37510700	4001	24
37552800	6000_02	16
37900105	6003_02	21
37900115	1001	22
37901002	1001	9
38120072	1000	16
38120075	2005	4
38120076	2005	6
38120077	1001	12
38120086	1001	3
38120087	1001	5
38120087	4001	2
38120088	1001	4
38120088	4001	2
38120089	1001	15
38120090	1001	16
38120097	1000	24
38120105	6002	16
38120106	6002	14
38120109	2000_02	13
38120109	2001_02	7
38120109	2011	7
38120110	2000_02	13
38120110	2001_02	7
38120110	2011	7
38120111	6002	19
38120115	2002_02	31
38120119	2002_02	30
38120120	2002_02	29
38120121	1000	10
38120126	1000	22
38120127	2007	32
38120127	2007_02	32
38120127	2016	32
38120127	6002	21
38120150	6003_02	15
38120163	1000	4
38120180	1001	24
38120209	6003_02	10
38120210	6003_02	9
38120211	6003_02	11
38120215	6003_02	20
38120216	6003_02	19
38120277	6003_02	10
38120318	1000	16
38120580	2005	3
38120581	2005	5
38123568	1000	13
38123852	1000	14
38221007	1000	5
38221017	1000	11
38221018	1000	11
38228005	6003_02	31
38228072	2000	3
38228072	2000_02	16
38228072	2002	15
38228072	2002_02	15
38228072	2007	14

Alphanumeric index

Code	No. table	Pos.
38228072	2007_02	14
38228072	2015	3
38228072	2016	14
38228072	6000	5
38228072	6002	12
38228072	6003_02	28
38228073	2001_02	1
38228073	2004	11
38228073	2007	13
38228073	2007_02	13
38228073	2011	1
38228073	2016	13
38228073	4000	8
38228073	4001	15
38228073	6002	11
38228074	2007	21
38228074	2007	29
38228074	2007_02	29
38228074	2016	21
38903002	1000	19
39110026	2002_02	34
39110035	4001	22
39110038	4001	28
39110062	1001	21
39110062	6003_02	22
39920006	1001	10
39920015	1000	18
45010208	1001	2
45010208	1001	26
45010384	1000	4
45010385	1000	4
69000243	2015	10
69000244	2000_02	20
69000288	2007	1
69000288	2007_02	1
69000288	2016	1
69000336	1000	8
69000337	2005	7
69000338	1000	8
69000339	2005	8
69000415	2000_02	2
69000450	2008	2
69000737	2007	12
69000737	2007_02	12
69000737	2016	12
690300026	1000	23
69150005	6000	26
69150006	6000	25
69150007	6000	24
69150008	6000	27
69200067	6003_02	40
69200072	1000	19
69200072	1000	21
69200073	2005	23
69200114	6000_02	9
69200115	2007_02	39
69200115	6000_02	7
69200116	6000_02	11
69200126	6000_02	8
69200127	6003_02	33
69200128	6003_02	33
69200130	2007_02	40
69200131	2007	9
69200131	2007_02	9
69200132	6002	6
69200133	2000	4
69200133	2002	16

Code	No. table	Pos.
69200133	2002_02	16
69200134	2007	17
69200134	6002	18
69200135	2007	16
69200135	2007_02	16
69200135	2008	28
69200135	2008	40
69200135	4000	3
69200136	2007_02	6
69200137	2007	8
69200137	2007_02	8
69200138	2007_02	7
69200139	2000	13
69200139	2007	36
69200139	2007_02	37
69200139	6003_02	37
69200140	2001_02	8
69200140	2004	10
69200140	2004	15
69200140	2007	36
69200140	2011	9
69200140	4000	5
69200140	4001	14
69200141	2007	30
69200141	2007_02	18
69200141	2007_02	30
69200141	2008	31
69200142	2000_02	15
69200142	2000_02	5
69200142	2007_02	42
69200146	2004	10
69200148	6002	10
69200150	2007	34
69200151	2007	35
69200164	2007	7
69200165	2007	6
69200173	2000_02	14
69200190	2007	18

Contacts

HEADQUARTERS, PRODUCTION PLANT AND R&D CENTERS

Rancilio Group s.p.a.
Viale della Repubblica 40
20010 Villastanza di Parabiago
Milano - Italy
Tel +39 0331 408200
Fax +39 0331 551437
www.ranciliogroup.com
info@ranciliogroup.com

Egro Suisse AG
Bahnhofstrasse 66
5605 Dottikon - Switzerland
Tel. +41 (0)56 616 95 95
Fax +41 (0)56 616 95 97
www.egrocoffee.com
info@egrocoffee.com

WORLDWIDE BRANCH LOCATIONS

SPAIN
RancilioGroup Espana, s.a.
Gran Vía de Carlos III, 84 3ª
Edificio Trade
08028 Barcelona - Spain
Ph. +34 902 884 275
Ph. +34 934 923 414
Fax +34 934 965 701
www.ranciliogroup.com
info-es@ranciliogroup.com

PORTUGAL
Rancilio Group Portugal Lda
Estrada da Falagueira nº 68 E
2700-365 Amadora-Lisboa - Portugal
Ph. + 351 21 019 10 91
Fax + 351 21 019 10 91

Rua Nova do Seixo 1282
4465-706 Leca do Balio-Porto - Portugal
Ph. + 351 22 010 14 19
Fax + 351 22 010 14 19
www.ranciliogroup.com
info-pt@ranciliogroup.com

GERMANY
Rancilio Group Deutschland GmbH
Talstrasse 27
97990 Weikersheim - Germany
Ph. +49 7934 99 29 30
Fax +49 7934 99 29 330
www.ranciliogroup.de
info-de@ranciliogroup.com

SWITZERLAND
Egro Suisse AG
Bahnhofstrasse 66
5605 Dottikon - Switzerland
Tel. +41 (0)56 616 95 95
Fax +41 (0)56 616 95 97
www.egrosuisse.ch
info@egrosuisse.ch

USA/CANADA
RancilioGroup North America Inc.
1340 Internationale Parkway / Suite 200
Woodridge, IL 60517 - U.S.A.
Ph: +1 630 914 7900
Fax: +1 630 914 7901
Toll Free: +1 877 726 2454
www.ranciliogroup.com
info@ranciliogroupna.com